MURRAY CITY CORP.
UTAH
DEPARTMENT OF TRANSPORTATION

U.S. STANDARD UNITS (INCH/POUND UNITS) — SHEET NO. 1
SEE SHEET 1A FOR INDEX TO PLAN

PLANS FOR COTTONWOOD STREET

FEDERAL AID PROJECT
*HPP-STP-2148(1)0

COTTONWOOD STREET: 5600 SOUTH TO VINE STREET
NEW CONSTRUCTION AND RECONSTRUCTION
SURFACING, GRADING, BRIDGE CONSTRUCTION, RETAINING WALLS,
UTILITY RELOCATION, DRAINAGE, LANDSCAPING, SIGNING
STRIPING, AND LIGHTING
SALT LAKE COUNTY
LENGTH-1.300 MILES

MURRAY CITY
APPROVED 2003

MAYOR

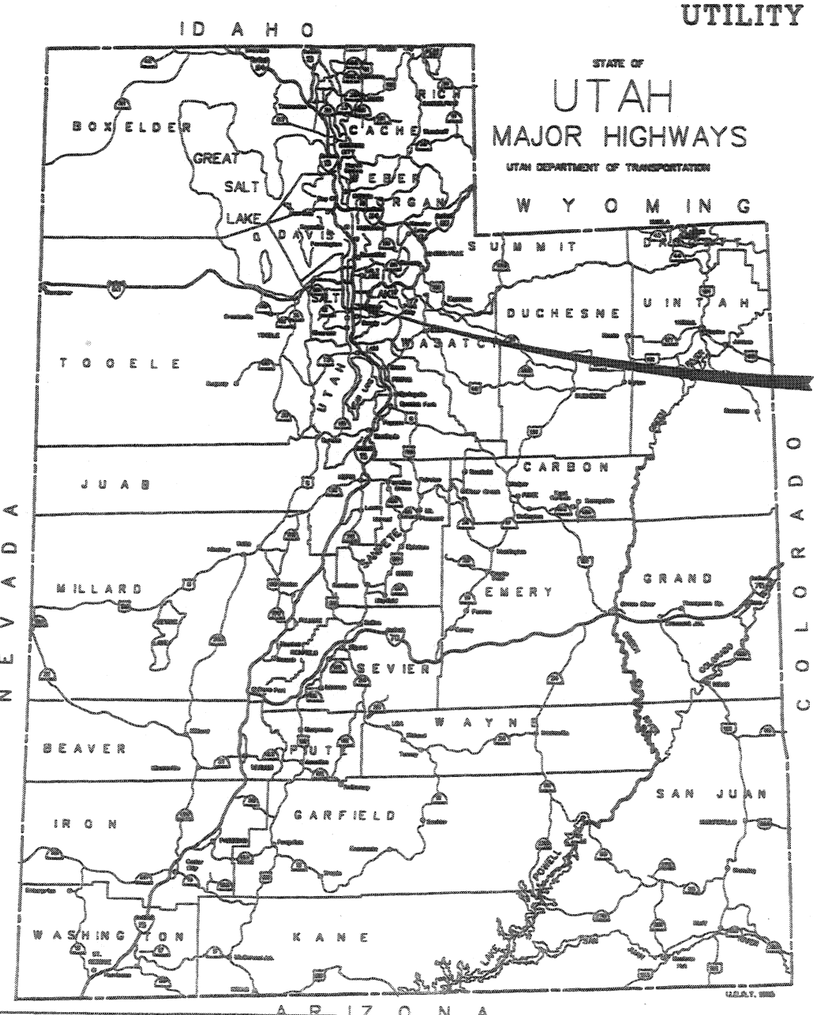

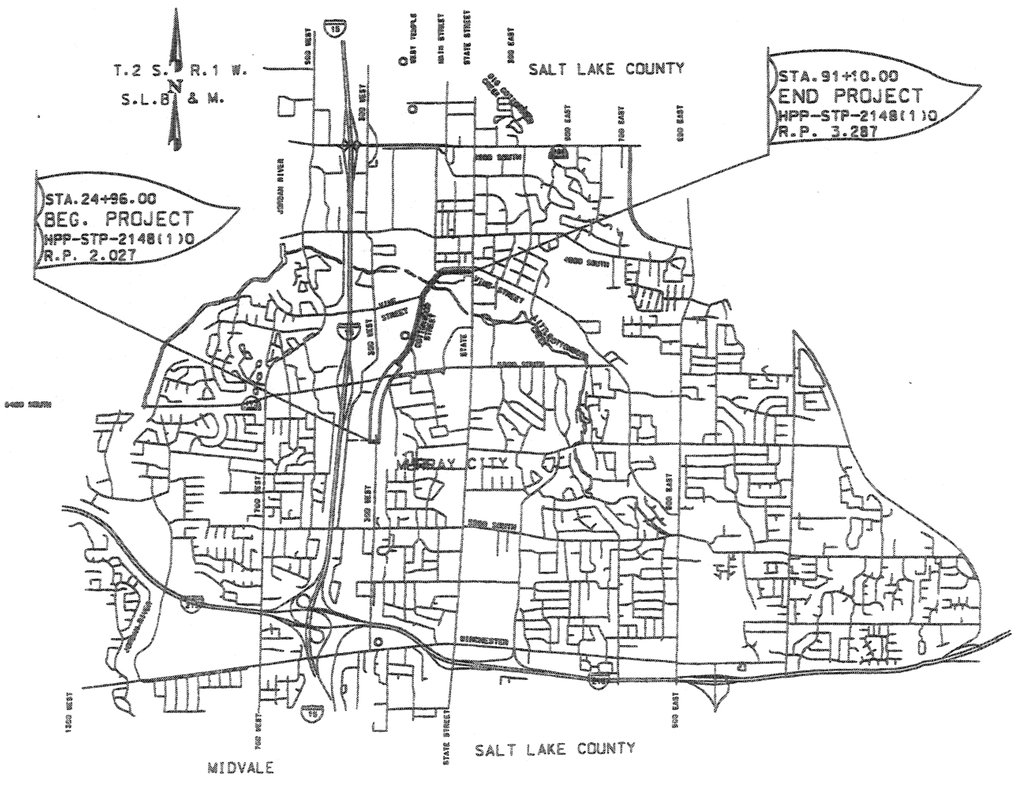

LOCHNER

INDEX TO SHEETS

INDEX TO PLAN SHEETS		
SHEETS	**DESCRIPTION**	**NO. SHEETS**
ROADWAY DRAWINGS		
1	TITLE SHEET	1
1A	INDEX TO PLANS	1
1B TO 1C	STANDARD DRAWING INDEX	2
1D	STORM WATER POLLUTION PREVENTION	1
1E	CROSS REFERENCE INDEX SHEET	1
1F TO 1I	SURVEY CONTROL SHEETS	4
TS-1 TO TS-4	TYPICAL SECTIONS	4
DT-1 TO DT-16	DETAIL SHEETS	16
SM-1 TO SM-14	SUMMARY SHEETS	15
MT-1 TO MT-2	MAINTENANCE OF TRAFFIC	2
RD-1 TO RD-8	ROADWAY PLAN	8
RP-1 TO RP-8	ROADWAY PROFILE	8
UT-1 TO UT-7	UTILITY / TOPOGRAPHY SHEETS	7
SW-1 TO SW-4	SEWERLINE RELOCATION	4
WT-1 TO WT-2	WATERLINE RELOCATION	2
RM-1 TO RM-8	REMOVAL SHEETS	8
GR-1 TO GR-8	SURCHARGE PLANS	8
DR-1 TO DR-7	DRAINAGE PLAN	7
DP-1 TO DP-3	DRAINAGE PROFILE	3
DD-1 TO DD-3	DRAINAGE DETAILS	3
LS-1 TO LS-3	LANDSCAPING	3
SS-1 TO SS-9	SIGNING & STRIPING	9
LT-1 TO LT-6	LIGHTING	6
RW-1 TO RW-5	RIGHT OF WAY	7

STRUCTURE DRAWINGS			
DRAWING NUMBER	**SHEET NUMBER**	**NUMBER OF SHEETS**	**DESCRIPTION**
GEO-923	1 TO 23	23	GEOFOAM RETAINING WALLS
MSE-923	1 TO 10	10	MSE RETAINING WALLS
R-427A	1	1	MODULAR BLOCK RETAINING WALL
R-427B	1	1	MODULAR BLOCK RETAINING WALL
MOD-923-2	1	1	MODULAR BLOCK RETAINING WALL
C-923	1 TO 5, 5A TO 5J, 6 TO 54	65	COTTONWOOD STREET BRIDGE

POWER LINE RELOCATION		
SHEETS	**NUMBER OF SHEETS**	**DESCRIPTION**
DRAWING INDEX & SHEETS MCP-001 TO MCP-047	50	POWER LINE RELOCATION

NOTE: WHEREVER THE PROJECT NO. HPP-STP-2148(1)0 APPEARS ON THESE PLANS IT IS UNDERSTOOD TO BE *HPP-STP-2148(1)0

LICENSED PROFESSIONAL ENGINEER
179901
SCOTT J. LUCAS
DATE SIGNED
STATE OF UTAH

SHEETS:
GEO-923 11
GEO-923 13 TO GEO-923 21

LICENSED PROFESSIONAL ENGINEER
No. 264962
DOUGLAS T. PERKINS
DATE SIGNED
STATE OF UTAH

SHEETS:
1, 1A TO 1I
TS-1 TO TS-4
DT-1 TO DT-16
SM-1 TO SM-14
MT-1, MT-2
RD-1 TO RD-8
RP-1 TO RP-8
UT-1 TO UT-7
RM-1 TO RM-8
GR-1 TO GR-8
SS-1 TO SS-9
LT-1 TO LT-6
R-427A, R-427B
MOD-923-2

LICENSED PROFESSIONAL ENGINEER
#343725-2202
JOHN H. GASTER
DATE SIGNED
STATE OF UTAH

SHEETS:
GEO-923 1 TO GEO-923 10
GEO-923 12
GEO-923 22, GEO-923 23

LICENSED PROFESSIONAL ENGINEER
#179190
JAMES C. DAHL, JR.
DATE SIGNED
STATE OF UTAH

SHEETS:
SW-1 TO SW-4
WT-1 TO WT-2
DR-1 TO DR-7
DP-1 TO DP-3
DD-1 TO DD-3

RELEASE FOR CONSTRUCTION

NO.	DATE	DESCRIPTION

MURRAY CITY CORPORATION
DEPARTMENT OF PUBLIC SERVICES — ENGINEERING DIVISION
4646 SOUTH 500 WEST, MURRAY UT. 84123 - (801) 270-2400

DESIGN CP 5/03 CHECK DTP 5/03 QA AUDIT
DRAWN EN 5/03 CHECK DTP 5/03 DATE
CHECK DATE
QUANT. PROJECT MANAGER DATE
APPROVAL RECOMM. DESIGN ENGINEER DATE APPROVED

COTTONWOOD STREET
5600 SOUTH TO VINE STREET
INDEX TO PLANS
PROJECT NUMBER *HPP-STP-2148(1)0
SALT LAKE COUNTY
SHEET NO. 1A

@DATE@ @TIME@ @FILE@

UTAH DEPARTMENT OF TRANSPORTATION

STANDARD DRAWINGS FOR ROAD AND BRIDGE CONSTRUCTION

	DWG. NO.	DESCRIPTION	DATE
		Advanced Traffic Management System (AT)	
	AT 1	LEGEND SHEET	07-03-02
	AT 2	RAMP METER DETAILS	07-03-02
	AT 3	RAMP METER SIGN PANEL	07-03-02
	AT 4	TYPICAL RAMP METER SIGNAL HEAD MOUNTING	07-03-02
	AT 5	LOOP INSTALLATION	07-03-02
	AT 6	CONDUIT DETAILS	07-03-02
	AT 7	POLYMER-CONCRETE JUNCTION BOX DETAILS	04-24-03
	AT 8	ATMS CABINET W/120V DISCONNECT	07-03-02
	AT 9	ATMS CAB WITH STEPDOWN TRANSFORMER	07-03-02
	AT 10	DOMED CCTV DETAILS	07-03-02
	AT 11	CCTV POLE DETAIL	07-03-02
	AT 12	CCTV POLE FOUNDATION FOR DEDICATED CCTV POLE	07-03-02
	AT 13	120V VMS CAB FOUNDATION DETAILS	07-03-02
	AT 14	WEIGHT IN MOTION PIEZO DETAIL	07-03-02
		Barriers (BA)	
X	BA 1A	PRECAST CONCRETE FULL BARRIER STANDARD SECTION	12-19-02
X	BA 1B	PRECAST CONCRETE FULL BARRIER STANDARD SECTION	12-19-02
X	BA 2	PRECAST CONCRETE HALF BARRIER STANDARD SECTION	07-03-02
X	BA 3	CAST IN PLACE CONSTANT SLOPE BARRIER	12-19-02
	BA 4	BEAM GUARDRAIL HARDWARE	07-03-02
	BA 4A	GUARDRAIL TRANSITION	07-03-02
	BA 4B	BEAM GUARDRAIL INSTALLATIONS	12-19-02
	BA 4C	BEAM GUARDRAIL ANCHOR TYPE 1	12-19-02
	BA 5	TRAFFIC CONTROL CABLE	07-03-02
		Catch Basins and Cleanouts (CB)	
	CB 1	STANDARD CATCH BASIN	07-03-02
	CB 2	CURB INLET CATCH BASIN	04-24-03
	CB 3	STANDARD TRANSITION CONCRETE LINED DITCH TO PIPE OR DIVERSION BOX	07-03-02
	CB 4	SOLID COVER FOR STD DWG DB 1 MS-18 LOADING	07-03-02
	CB 5	STANDARD SCREW GATE AND FRAME	07-03-02
	CB 5A	STANDARD DROP INLET DETAILS GENERAL NOTES AND INSTALLATION DETAIL	07-03-02
	CB 6B	STANDARD CATCH BASIN AND CLEANOUT BOX DROP INLET TYPE "A" DETAIL	07-03-02
	CB 6C	STANDARD CATCH BASIN AND CLEANOUT BOX DROP INLET TYPE "B" DETAILS	07-03-02
	CB 6D	STANDARD CATCH BASIN AND CLEANOUT BOX DROP INLET TYPE "C" DETAILS	07-03-02
	CB 6E	STANDARD CATCH BASIN AND CLEANOUT BOX DROP INLET WITH ATTACHED APRON DETAILS	07-03-02
	CB 6F	STANDARD CATCH BASIN AND CLEANOUT BOX DROP INLET WITH ATTACHED APRON DETAILS	07-03-02
	CB 6G	STANDARD CATCH BASIN AND CLEANOUT BOX DROP INLET TYPE "D" DETAILS	07-03-02
	CB 6H	STANDARD CATCH BASIN AND CLEANOUT BOX DROP INLET TYPE "D" TABLES	07-03-02
	CB 7	STANDARD CURB AND GUTTER DROP INLET	07-03-02
	CB 8A	DOUBLE CATCH BASIN	07-03-02
	CB 8B	DOUBLE CATCH BASIN	07-03-02

	DWG. NO.	DESCRIPTION	DATE
X	CB 9A	STANDARD CATCH BASIN AND CLEANOUT BOX SITUATION & LAYOUT	07-03-02
X	CB 9B	STANDARD CATCH BASIN AND CLEANOUT BOX SECTION DETAILS	07-03-02
X	CB 9C	STANDARD CATCH BASIN AND CLEANOUT BOX SCHEDULE OF INSTALLATION 15" TO 42" RCP 12" TO 48" CMP	07-03-02
X	CB 9D	STANDARD CATCH BASIN AND CLEANOUT BOX SCHEDULE OF INSTALLATION 48" TO 66" RCP 60" TO 78"CPM	07-03-02
	CB 10A	STANDARD CATCH BASIN AND CLEANOUT BOX SITUATION & LAYOUT	07-03-02
	CB 10B	STANDARD CATCH BASIN AND CLEANOUT BOX SECTION DETAILS	07-03-02
	CB 10C	STANDARD CATCH BASIN AND CLEANOUT BOX SCHEDULE OF INSTALLATION 42" TO 60" RCP 48" TO 72" CMP	07-03-02
		Crash Cushions (CC)	
X	CC 1	CRASH CUSHION MARKINGS	07-03-02
	CC 2	CRASH CUSHION DRAINAGE DETAILS GUIDELINE A	07-03-02
	CC 3	CRASH CUSHION DRAINAGE DETAILS GUIDELINE B	07-03-02
X	CC 4	DETAIL FOR PLACEMENT CRASH CUSHIONS TYPE A, B & D	07-03-02
	CC 5	GRADING & PLACEMENT DETAIL CRASH CUSHION TYPE C	07-03-02
	CC 6	CRASH CUSHION TYPE E SAND BARREL DETAILS	12-19-02
	CC 7	GRADING & INSTALLATION DETAILS CRASH CUSHION TYPE F	04-24-03
	CC 8	GRADING & INSTALLATION DETAILS CRASH CUSHION TYPE G	04-24-03
	CC 9A	GRADING & INSTALLATION DETAILS CRASH CUSHION TYPE H	04-24-03
	CC 9B	GRADING & INSTALLATION DETAILS CRASH CUSHION TYPE H	04-24-03
		Diversion Boxes (DB)	
	DB 1A	STANDARD DIVERSION BOX/COVER PLATE/GRATING FOR 18"DIA. OR 24"DIA.PIPE	07-03-02
X	DB 1B	STANDARD DIVERSION BOX HINGED LID DETAIL FOR 18" DIA OR 24" DIA.PIPE	07-03-02
	DB 1C	STANDARD DIVERSION BOX BICYCLE-SAFE GRATING DETAILS FOR 18"DIA. OR 24"DIA.PIPE	07-03-02
X	DB 1D	STANDARD DIVERSION BOX THREE GATE BOX SECTIONS FOR 18"DIA. OR 24"DIA.PIPE	07-03-02
	DB 1E	STANDARD DIVERSION BOX THREE GATE BOX SECTIONS FOR 18"DIA. OR 24"DIA.PIPE	07-03-02
	DB 1F	STANDARD DIVERSION BOX THREE GATE BOX SECTIONS FOR 18"DIA. OR 24"DIA.PIPE	07-03-02
	DB 2A	STANDARD DIVERSION BOX W/INTERCHANGEABLE WALLS, BOTTOM SLAB, WALLS AND APRON DETAIL	07-03-02
	DB 2B	STANDARD DIVERSION BOX W/INTERCHANGEABLE WALLS, QUANTITIES SCHEDULE	07-03-02
	DB 2C	STANDARD DIVERSION BOX W/INTERCHANGEABLE WALLS, HAND SLIDE GATE DETAILS	07-03-02
	DB 2D	STANDARD DIVERSION BOX TYPE "C" HAND SLIDE GATE DETAILS	07-03-02
	DB 2E	STANDARD DIVERSION BOX HINGED LID (SOLID COVER PLATE) TYPE "A" DETAILS TYPE I PLAN	07-03-02
	DB 2F	STANDARD DIVERSION BOX HINGED LID (SOLID COVER PLATE) TYPE "A" DETAILS TYPE II PLAN	07-03-02
	DB 2G	STANDARD DIVERSION BOX HINGED LID SOLID COVER TYPE "B"DETAILS	07-03-02
	DB 2H	STANDARD DIVERSION BOX HINGED LID SOLID COVER TYPE "B" & "C"DETAILS	07-03-02
	DB 3A	STANDARD DIVERSION BOX WITH MANHOLE COVER SITUATION & LAYOUT	07-03-02
	DB 3B	STANDARD DIVERSION BOX WITH MANHOLE COVER UP TO 42" RCP AND UP TO 54" CMP	07-03-02
	DB 3C	STANDARD DIVERSION BOX WITH MANHOLE COVER 48"TO 72" RCP AND 60"TO 84" CMP	07-03-02

	DWG. NO.	DESCRIPTION	DATE
		Design (DD)	
	DD 1	SUPERELEVATION AND WIDENING	08-28-03
X	DD 2	SLOPE ROUNDING, BENCHED SLOPE, AND CUT DITCH DETAILS	08-28-03
	DD 3	CLIMBING LANES	08-28-03
	DD 4	GEOMETRIC DESIGN FOR FREEWAYS (ROADWAY)	08-28-03
	DD 5	ENTRANCE AND EXIT RAMPS AT CROSSROADS	08-28-03
	DD 6	ENTRANCE AND EXIT RAMP GEOMETRICS	08-28-03
	DD 7	FREEWAY CROSSOVER	08-28-03
	DD 8	STRUCTURAL GEOMETRIC DESIGN STANDARDS CLEANERS	08-28-03
	DD 9	STRUCTURAL GEOMETRIC DESIGN STANDARDS	08-28-03
	DD 10	RAILROAD CLEARANCES AT HIGHWAY OVERPASS STRUCTURES	08-28-03
	DD 11	RURAL MULTILANE HIGHWAYS OTHER THAN FREEWAYS	08-28-03
	DD 12	RURAL TWO LANE HIGHWAYS	08-28-03
	DD 13	FRONTAGE AND ACCESS ROADS (UNDER 50 ADT)	08-28-03
	DD 14	TYPICAL RURAL 2 LANE ROAD WITH MEDIAN LANE AND DECELERATION LANE FOR INTERSECTING CROSSROADS	08-28-03
		Drainage (DG)	
	DG 1	FILL HEIGHT FOR METAL PIPE (STEEL)	07-03-02
	DG 2	FILL HEIGHT FOR METAL PIPE (ALUMINUM)	07-03-02
	DG 3	MAXIMUM FILL HEIGHT AND END SECTIONS FOR HDPE AND PVC PIPES	12-19-02
	DG 4	PIPE CULVERTS MINIMUM COVER	12-19-02
	DG 5	PLASTIC PIPE, METAL PIPE OR PIPE ARCH CULVERT BEDDING	07-03-02
X	DG 6	PRECAST CONCRETE PIPE CULVERT	07-03-02
	DG 7	GASKETTED JOINTS OR COUPLINGS BANDS FOR C.M.P.	07-03-02
	DG 8	METAL CULVERT END SECTION	07-03-02
	DG 9	MISCELLANEOUS PIPE DETAILS	07-03-02
		Environmental Controls (EN)	
	EN 1	TEMPORARY EROSION CONTROL (CHECK DAMS)	07-03-02
X	EN 2	TEMPORARY EROSION CONTROL (SILT FENCE)	04-24-03
	EN 3	TEMPORARY EROSION CONTROL (SLOPE DRAIN AND TEMPORARY BERM)	07-03-02
X	EN 4	TEMPORARY EROSION CONTROL (DROP INLET BARRIERS)	12-19-02
X	EN 5	TEMPORARY EROSION CONTROL (SEDIMENT TRAP AND CURB INLET BARRIER)	07-03-02
		Fence and Gates (FG)	
	FG 1A	RIGHT OF WAY FENCE AND GATES (WOOD POST)	07-03-02
	FG 1B	RIGHT OF WAY FENCE AND GATES (WOOD POST)	07-03-03
	FG 2A	RIGHT OF WAY FENCE AND GATES (METAL POST)	07-03-02
	FG 2B	RIGHT OF WAY FENCE AND GATES (METAL POST)	07-03-02
X	FG 3	SWING GATES TYPE 1 FOR GATES LESS THAN 17'	07-03-02
	FG 4	DEER GATES	07-03-02
X	FG 5	SWING GATES TYPE II FOR GATES WIDER THAN 17'	07-03-02
X	FG 6	CHAIN LINK FENCE	07-03-02

X MARKED BOXES INDICATE DRAWINGS APPLICABLE TO THIS PROJECT

REVISIONS

NO.	DATE	APPR	REMARKS
1	02/19/03	B.A.	CHANGE 1
2	04/24/03	B.A.	CHANGE 3
3	06/26/03	B.A.	CHANGE 4
4	08/28/03	B.A.	CHANGE 5

UTAH DEPARTMENT OF TRANSPORTATION
STANDARD DRAWINGS FOR ROAD AND BRIDGE CONSTRUCTION
SALT LAKE CITY, UTAH

REVIEWED AND CHECKED

CHECKED AND APPROVAL — AUG.28,2003 DATE

STANDARD ENGINEER — AUG.28,2003 DATE

STANDARD DRAWING INDEX SHEET

STANDARD DRAWING TITLE

STD DWG 1-B

UTAH DEPARTMENT OF TRANSPORTATION

STANDARD DRAWINGS FOR ROAD AND BRIDGE CONSTRUCTION

	DWG. NO.	DESCRIPTION	DATE
		Grates, Frames and Trash Racks (GF)	
	GF 1	MANHOLE FRAME AND GRATED COVER	07-03-02
	GF 2	MANHOLE FRAME AND SOLID COVER	07-03-02
X	GF 3	RECTANGULAR GRATE & FRAME	07-03-02
	GF 4	DIRECTIONAL FLOW GRATE & FRAME	07-03-02
X	GF 5	SOLID COVER & FRAME	07-03-02
X	GF 6	MANHOLE STEPS	07-03-02
	GF 7	STANDARD SCREW GATE & FRAME	07-03-02
	GF 8	2' x 2' GATE AND FRAME	07-03-02
	GF 9	28" x 24" DIRECTIONAL FLOW GRATE AND FRAME	07-03-02
	GF 10	STANDARD TRASH RACKS 90° ANGLE X-ING L	07-03-02
	GF 11	STANDARD TRASH RACKS	07-03-02
	GF 12	STANDARD TRASH RACKS	07-03-02
		General Road Work (GW)	
X	GW 1	RAISED MEDIAN AND FLOWABLE END SECTION	12-19-02
X	GW 2	CONCRETE CURB AND GUTTER	08-26-03
	GW 3	CONCRETE CURB AND GUTTER DETAILS	07-03-02
X	GW 4	CONCRETE DRIVEWAYS AND SIDEWALKS	07-03-02
X	GW 5	PEDESTRIAN ACCESS	02-27-03
	GW 6	RIGHT OF WAY MARKER	07-03-02
X	GW 7	NEWSPAPER AND MAILBOX STOP LAYOUT	07-03-02
X	GW 8	NEWSPAPER AND MAILBOX SUPPORT HARDWARE	07-03-02
X	GW 9	DELINEATION HARDWARE	08-28-03
X	GW 10	DELINEATION APPLICATION	08-28-03
	GW 11	SIDEWALKS AND SHOULDERS ON URBAN ROADWAYS	08-28-03
		Paving (PV)	
	PV 1	JOINTS FOR HIGHWAYS WITH CONCRETE TRAFFIC LANES AND SHOULDERS	07-03-02
	PV 2	PAVEMENT/APPROACH SLAB DETAILS	12-19-02
	PV 3	CONCRETE PAVEMENT DETAILS FOR URBAN AND INTERSTATE	07-03-02
	PV 4	CONCRETE PAVEMENT DETAILS FOR URBAN AND INTERSTATE	07-03-02
	PV 5	URBAN CONCRETE PAVEMENT DETAILS	07-03-02
	PV 6	RUMBLE STRIPS	07-03-02
	PV 7	RUMBLE STRIPS -TYPICAL APPLICATION	07-03-02
		Signals (SL)	
	SL 1	TRAFFIC SIGNALS MAST ARM POLE AND LUMINAIRE EXTENSION	07-03-02
	SL 2	TRAFFIC SIGNALS MAST ARM DETAIL 25' THRU 65'	07-03-02
	SL 3	UNDERGROUND SERVICE PEDESTAL DETAIL	07-03-02
	SL 4	TRAFFIC SIGNALS MAST ARM POLE FOUNDATION	07-03-02
	SL 5	BREAKAWAY POST MOUNTED TRAFFIC SIGNAL POLE	07-03-02
	SL 6	POWER SOURCE DETAILS	07-03-02
	SL 7	SPAN WIRE SIGNAL POLE DETAIL	07-03-02
	SL 8	SIGNAL HEAD DETAILS	07-03-02

	DWG. NO.	DESCRIPTION	DATE
	SL 9	PEDESTRIAN SIGNAL ASSEMBLY	07-03-02
	SL 10	CONTROLLER BASE DETAIL	07-03-02
	SL 11	TRAFFIC SIGNALS LOOP DETECTOR DETAIL	07-03-02
	SL 12	JUNCTION BOX DETAILS	07-03-02
	SL 13	TRAFFIC COUNTING LOOP DETECTOR DETAIL	12-19-02
	SL 14	LIGHT POLE BREAKAWAY BASE	07-03-02
	SL 15	LUMINARIE BREAKAWAY BASE DETAIL	07-03-02
	SL 16	SINGLE TRANSFORMER SUBSTATION DETAILS	07-03-02
X	SL 17	LIGHT POLE ANCHOR BASE	07-03-02
	SL 18	LIGHT POLE FOUNDATION EXTENSION	07-03-02
		Signs (SN)	
	SN 1	BRIDGE LOAD LIMITS SIGNS	07-03-02
	SN 2	FLASHING SCHOOL SIGN	12-19-02
	SN 3	OVERHEAD SCHOOL FLASHER	07-03-02
	SN 4	FLASHING STOP SIGN	12-19-02
	SN 5	TYPICAL INSTALLATION FOR MILEPOST SIGNS	12-19-02
	SN 6	NOT USED	07-03-02
X	SN 7	PLACEMENT OF GROUND MOUNTED SIGNS	07-03-02
X	SN 8	GROUND MOUNTED TIMBER SIGN POST (P1)	12-19-02
	SN 9	GROUND MOUNTED TUBULAR STEEL SIGN POST (P2)	07-03-02
	SN 10	GROUND MOUNTED SQUARE STEEL SIGN POST (P3)	07-03-02
	SN 11	SLIPBASE GROUND MOUNTED TUBULAR STEEL SIGN POST (P-4)	07-03-02
	SN 12A	GROUND MOUNTED SIGN INSTALLATION DETAILS	07-03-02
	SN 12B	GROUND MOUNTED SIGN INSTALLATION DETAILS	04-24-03
	SN 12C	GROUND MOUNTED SIGN INSTALLATION DETAILS	07-03-02
		Striping (ST)	
	ST 1	OBJECT MARKERS "T" INTERSECTION & PAVEMENT TRANSITION GUIDANCE	12-19-02
	ST 2	FREEWAY CROSSOVER MARKINGS	08-26-03
	ST 3	TYPICAL PAVEMENT MARKINGS	07-03-02
X	ST 4	CROSSWALKS, PARKING AND INTERSECTION APPROACHES	07-03-02
X	ST 5	PAINTED MEDIAN & AUXILIARY LANE DETAILS	07-03-02
	ST 6	PASSING/CLIMBING LANES TRAFFIC CONTROL	07-03-02
	ST 7	PAVEMENT MARKINGS AND SIGNS AT RAILROAD CROSSING	12-19-02
	ST 8	FLOWABLE PAVEMENT MARKERS	07-03-02
	ST 9	SCHOOL CROSSING AND SCHOOL MESSAGE	08-28-03

	DWG. NO.	DESCRIPTION	DATE
		Structures and Walls (SW)	
	SW 1A	WELDED END GUARD UNIT	07-03-02
	SW 1B	PRECAST CONCRETE CATTLE GUARD	07-03-02
	SW 2	NOISE WALL PLACEMENT AREA	07-03-02
	SW 3A	PRECAST CONCRETE NOISE WALL 1 OF 2	12-19-02
	SW 3B	PRECAST CONCRETE NOISE WALL 2 OF 2	12-19-02
	SW 4A	PRECAST CONCRETE RETAININGNOISE WALL 1 OF 2	12-19-02
	SW 4B	PRECAST CONCRETE RETAININGNOISE WALL 2 OF 2	07-03-02
		Traffic Control (TC)	
X	TC 1A	CONSTRUCTION ZONE CHANNELIZATION DEVICES	07-03-02
X	TC 1B	CONSTRUCTION ZONE SIGNING	07-03-02
X	TC 2A	TRAFFIC CONTROL GENERAL	07-03-02
X	TC 2B	TRAFFIC CONTROL GENERAL	07-03-02
X	TC 3	TRAFFIC CONTROL PROJECT LIMIT SIGNING	07-03-02
X	TC 4	TRAFFIC CONTROL URBAN INTERSECTION WITH ROADWAYS UNDER 50 MPH	07-03-02
X	TC 5	TRAFFIC CONTROL URBAN INTERSECTION WITH ROADWAYS UNDER 50 MPH	07-03-02
X	TC 6	TRAFFIC CONTROL PEDESTRIAN ROUTING	07-03-02
X	TC 7	TRAFFIC CONTROL ROAD CLOSURE, DETOUR	07-03-02
X	TC 8	TRAFFIC CONTROL LANE CLOSURE	07-03-02
X	TC 9	TRAFFIC CONTROL MULTILANE CLOSURE	07-03-02
	TC 10	TRAFFIC CONTROL EXPRESSWAY AND FREEWAY CROSSOVER/ TURN AROUND	07-03-02
	TC 11	TRAFFIC CONTROL EXIT RAMP GORE	07-03-02
	TC 12	TRAFFIC CONTROL ENTRANCE RAMP GORE	07-03-02
	TC 13	TRAFFIC CONTROL SHOULDER-HAUL ROAD	07-03-02
X	TC 14	TRAFFIC CONTROL FLAGGING OPERATION	07-03-02
	TC 15	TRAFFIC CONTROL 2 LANE / 2 WAY SEAL COAT WITH COVER MATERIAL	07-03-02
X	TC 16	TRAFFIC CONTROL PAVEMENT MARKING	07-03-02

X MARKED BOXES INDICATE DRAWINGS APPLICABLE TO THIS PROJECT

REVISIONS

NO.	DATE	APPR.	REMARKS
1	02/19/03	B.A.	CHANGE 1
2	03/24/03	B.A.	CHANGE 2
3	04/24/03	B.A.	CHANGE 3
4	08/26/03	B.A.	CHANGE 4
5	08/28/03	B.A.	CHANGE 5

UTAH DEPARTMENT OF TRANSPORTATION
STANDARD DRAWINGS FOR ROAD AND BRIDGE CONSTRUCTION
SALT LAKE CITY, UTAH

REVIEWED AND CHECKED — AUG.26,2003 DATE

CHECKED AND APPROVAL — AUG.26,2003 DATE

STANDARD ENGINEER

STANDARD DRAWING INDEX SHEET

STANDARD DRAWING TITLE

STD DWG

UDOT – STORM WATER POLLUTION PREVENTION PLAN

1. SITE DESCRIPTION

PROJECT LIMITS:

STA. 24+96.00 TO STA. 91+10.00

PROJECT DESCRIPTION:

COTTONWOOD STREET: 5600 SOUTH TO VINE STREET NEW CONST. AND RECONST. SURFACING, GRADING, BRIDGE, WALLS, UTILS., DRAINAGE, LANDSCAPING, LIGHTING

MAJOR SOIL DISTURBING ACTIVITIES:

(CHECK THE FOLLOWING AS THEY APPLY)

- X CLEAR AND GRUBBING
- X EXCAVATION
- X GRADING
- X PLACEMENT OF FILL
- X CUT AND FILL
- X OTHERS UTILITY WORK

TOTAL PROJECT AREA:

7.7 AC.

TOTAL AREA TO BE DISTURBED: 7.7 AC.

WEIGHTED RUNOFF COEFFICIENT (AFTER CONSTRUCTION):

0.80

EXISTING CONDITION OF SOIL & VEGETATIVE COVER AND % OF VEGETATION COVER:

BARE SOIL OR VEGETATED 75%

IMPERVIOUS AREA 25%

NAME OF RECEIVING WATERS:

LITTLE COTTONWOOD CREEK

2. CONTROLS:

2a. EROSION AND SEDIMENT

• STABILIZATION PRACTICES:	STD. SPEC. NO.
X TEMPORARY OR PERMANENT SEEDING	02922
___ TURF SODDING	02922
X PLANTING	02931, 02932
X MULCHING	02911
X EROSION CONTROL BLANKETS	02376
___ VEGETATIVE BUFFER STRIPS	
___ PRESERVATION OF TREES	
___ ROUGHENED SURFACE GRADING PRACTICES	02912

• STRUCTURAL PRACTICES:	STD.DWG. NO.	STD.SPEC. NO.	SHEET NO.
X SILT FENCES	EN 2	01571	R-427A, R-427B
___ STRAW OR HAY BALE BARRIERS	EN 1	01571	
___ TEMPORARY BERMS	EN 3	01571	
___ TEMPORARY SLOPE DRAINS	EN 3	01571	
___ BRUSH BARRIERS			
___ DRAINAGE SWALES/DITCHES		02318	
___ CHANNEL LINERS		02376	
___ RIPRAP		02372	
___ CHECK DAMS	EN 1	01571	
___ SEDIMENT TRAPS	EN 5	01571	
___ TEMP. OR PERMANENT SEDIMENT BASINS		01571	
___ PIPE INLET PROTECTION			
___ PIPE OUTLET PROTECTION		02373	
X DROP-INLET BARRIERS	EN 4	01571	DR-1 TO DR-6
___ CURB INLET BARRIERS	EN 5	01571	
X CURBS AND GUTTERS	GW 2	02771	RD-1 TO RD-8
X OFF-SITE VEHICLE TRACKING CONTROL	HAZARDOUS MATERIALS WORK PLAN		

- WILL CONSTRUCTION OR PLACEMENT OF EROSION CONTROL STRUCTURES IMPACT REGULATED WETLANDS ?
  YES_____ NO_X_
  THE PLACEMENT OF EROSION CONTROL STRUCTURES ARE INCLUDED IN THE TOTAL PROJECT WETLAND IMPACTS AND HAVE BEEN PERMITTED THROUGH THE army CORPS OF ENGINEERS.

2b. STORM WATER MANAGEMENT:

HANDLE STORM WATER RUNOFF DURING AND AFTER CONSTRUCTION BY DITCHES, CHANNELS, AND DROP INLETS INTO CROSS CULVERTS OR STORM DRAIN AS DESIGNED. INCLUDE MITIGATION MEASURES WHERE APPLICABLE.

2c. OTHER CONTROLS:

- **WASTE MATERIALS AND DISPOSAL:**
  COMPLY WITH SECTION 00725 ARTICLE "FINAL CLEANUP" SECTION 01455 ARTICLE "FINISHING LOCAL MATERIAL SOURCE SITES", AND SECTION 00820
- **OFFSITE VEHICLE TRACKING AND DUST CONTROL:**
  COMPLY WITH SECTION 01572 AND HARZARDOUS MATERIALS WORK PLAN.
- **HAZARDOUS WASTE (INCLUDING SPILL REPORTING):**
  COMPLY WITH SECTION 01355 AND SECTION 00820 AND HARZARDOUS MATERIALS WORK PLAN.
- **SANITARY WASTE:**
  COMPLY WITH SECTION 00820

2d. APPROVED STATE OR LOCAL PLANS:

THIS STORM WATER POLLUTION PREVENTION PLAN HAS BEEN DEVELOPED IN ACCORDANCE WITH THE PROVISIONS OF THE MEMORANDUM OF UNDERSTANDING (MOU) BETWEEN THE UDOT AND THE UTAH DEPARTMENT OF ENVIRONMENTAL QUALITY AND THE BEST MANAGEMENT PRACTICE (BMP) PLANS AND HAS BEEN APPROVED BY THE UTAH DIVISION OF WATER QUALITY.

3. MAINTENANCE:

COMPLY WITH SECTION 00725 ARTICLE "FINAL CLEANUP" SECTION 00727 ARTICLE "MAINTAINING THE WORK DURING CONSTRUCTION" AND SECTION 01571 ARTICLE "INSTALLATION"

ACCOMPLISH NECESSARY MAINTENANCE OF CONTROL MEASURES TO PROVIDE CONTINUED EFFECTIVENESS. SCHEDULE AND ACCOMPLISH MAINTENANCE EFFORTS AFTER EACH STORM EVENT AND PRIOR TO ANTICIPATED STORM EVENTS.

4. INSPECTION:

COMPLY WITH SECTION 00727 ARTICLE "INSPECTION OF WORK". INSPECT BY QUALIFIED PERSONNEL, DISTURBED AREAS, STORAGE AREAS, EROSION/SEDIMENT CONTROL MEASURES AND CONSTRUCTION ACCESS LOCATIONS:

- AT LEAST ONCE EVERY FOURTEEN DAYS FOR SITES NOT FINALLY STABILIZED.
- PRIOR TO ANTICIPATED STORM EVENTS THAT COULD RESULT IN SUBSTANTIAL RUNOFF.
- WITHIN 24 HOURS AFTER A STORM THAT RESULTS IN 0.5 INCH OF RUNOFF OR GREATER.
- AT LEAST ONCE A MONTH, WHEN RUNOFF IS UNLIKELY OR WHERE SITES HAVE BEEN STABILIZED.

PREPARE A REPORT FOR EACH INSPECTION. INCLUDE THE SCOPE OF THE INSPECTION, DATE, NAMES OF INSPECTORS, MAJOR OBSERVATIONS, FAILED CONTROLS AND ACTIONS TAKEN.

RETAIN COPIES OF INSPECTION REPORTS, THE SWPPP, THE NOI AND OTHER RECORDS FOR 3 YEARS FOLLOWING.

5. NON-STORM WATER DISCHARGES:

COMPLY WITH APPROPRIATE SECTIONS.

6. KEEPING PLANS CURRENT:

AMEND THIS STORM WATER POLLUTION PREVENTION PLAN WHENEVER:

1. THERE IS A CHANGE IN DESIGN, CONSTRUCTION, OPERATION OR MAINTENANCE THAT HAS A SUBSTANTIAL EFFECT ON THE DISCHARGE OF POLLUTANTS TO THE WATERS OF THE STATE.
2. INSPECTIONS OR INVESTIGATIONS BY OFFICIALS INDICATE THAT THE PLAN IS INEFFECTIVE IN ELIMINATING, MINIMIZING OR CONTROLLING THE DISCHARGE OF POLLUTANTS ASSOCIATED WITH CONSTRUCTION ACTIVITY.
3. THERE IS A NEW CONTRACTOR OR SUBCONTRACTOR THAT IMPLEMENTS A MEASURE OF THE STORM WATER POLLUTION PREVENTION PLAN.

GENERAL NOTES:

1. IMPLEMENT STORM WATER POLLUTION PREVENTION PLAN IN ACCORDANCE WITH UDOT'S CURRENT STANDARD SPECIFICATIONS FOR ROAD AND BRIDGE CONSTRUCTION, WITH SPECIAL EMPHASIS ON SECTIONS 01355, 01571, 01574 AND STANDARD DRAWING SHEETS EN 1 – EN 5
2. COMPLY WITH THE REQUIREMENTS OF THIS STORM WATER POLLUTION PREVENTION PLAN FOR ANY ADDITIONAL CONSTRUCTION ACTIVITIES PERFORMED WITHIN THE PROJECT LIMITS NOT COVERED UNDER THE CONTRACT.

NO.	DATE	DESIGN REV. BY	MARK CORR. BY	PARCEL AFFECTED	REQUEST BY	REMARKS
1	05/09/0				FRW	CORRECTED SPELLING NOTES 2A, 4 AND 6
2	08/15/02				FRW	REVISED TO U.S. STANDARD UNITS (INCH-POUND UNITS)

REVISIONS

DATE: ORIGINAL SUBMISSION FOR AUTHORIZATION

MURRAY CITY CORPORATION
DEPARTMENT OF PUBLIC SERVICES — ENGINEERING DIVISION
4646 SOUTH 500 WEST, MURRAY UT. 84123 – (801) 270-2400

	DESIGN	DRAWN	QUANT.	CHECK	QA AUDIT
DTP	DTP			SL	
8/03	8/03			8/03	

DESIGN ENGINEER — DATE
PROJECT MANAGER — DATE
APPROVED — DATE
BY

COTTONWOOD STREET
5600 SOUTH TO VINE STREET
POLLUTION PREVENTION PLAN

PROJECT NUMBER *IPP-STP-2148(1)0

SALT LAKE COUNTY

SHEET NO. 10

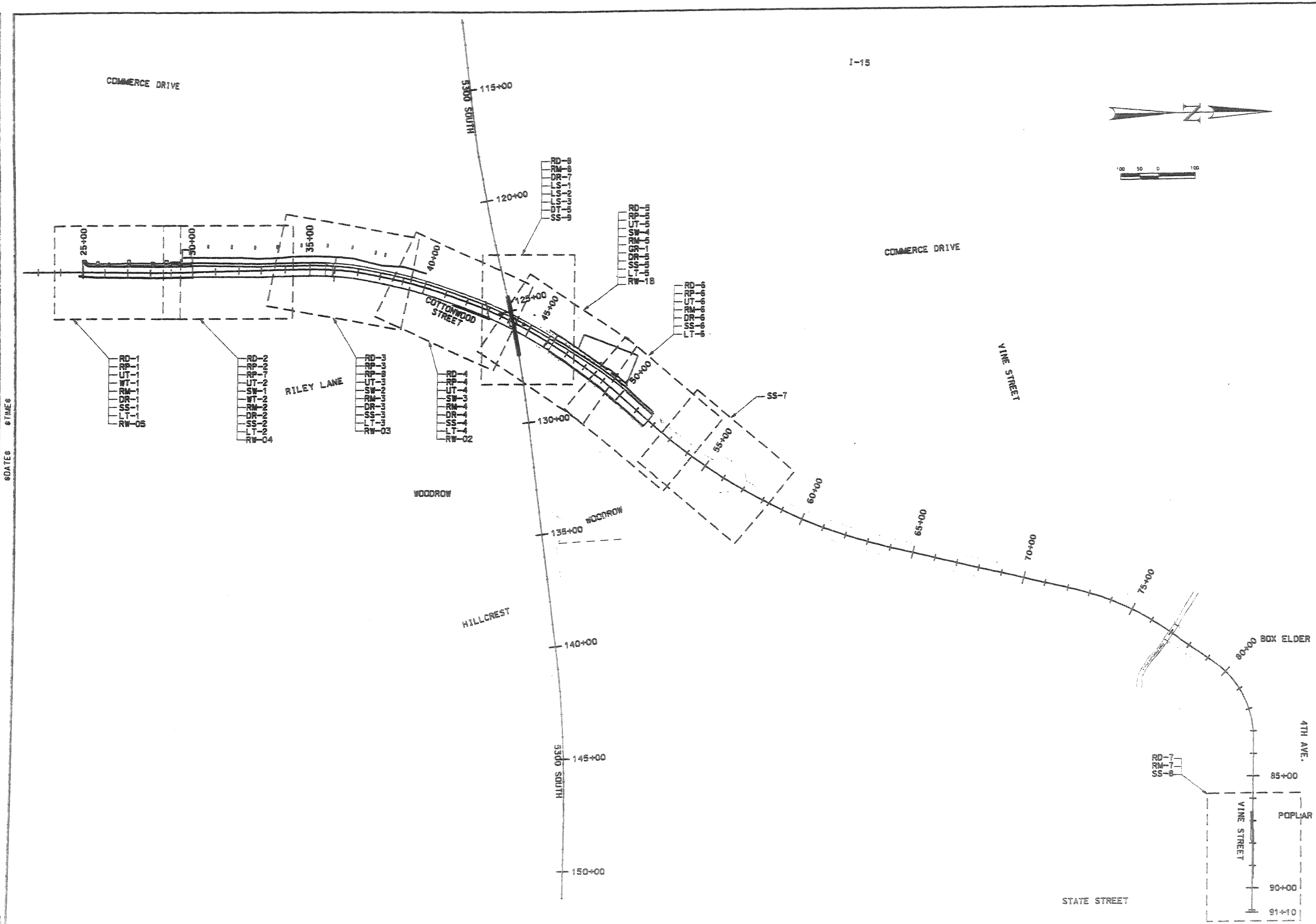

RELEASE FOR CONSTRUCTION

NO.	DATE	DESCRIPTION

MURRAY CITY CORPORATION

DEPARTMENT OF PUBLIC SERVICES — ENGINEERING DIVISION
4646 SOUTH 500 WEST, MURRAY UT. 84123 - (801) 270-2400

APPROVAL RECOMM. DATE	DESIGN CP 5/03	CHECK DTP 9/03	QA AUDIT
DESIGN ENGINEER	DRAWN BH 5/03	CHECK DTP 9/03	DATE
APPROVED DATE PROJECT MANAGER	QUANT. ES 9/03	CHECK	BY

COTTONWOOD STREET
5600 SOUTH TO VINE STREET
CROSS REFERENCE INDEX SHEET

PROJECT NUMBER *HPP-STP-2148(1)0

SALT LAKE COUNTY

NOTE:

1. SEE SHEET 1H FOR RIGHT OF WAY CONTROL

UTILITY ACCESS ROAD						
STATION	EVENT	NORTHING	EASTING	BEARING	FROM STATION	TO STATION
0+50.00	BEGIN	844670.337	1889625.878	N 0°45'07.37" E	0+50.00	0+80.28
0+80.28	PI	844700.618	1889626.275	N 0°29'24.11" E	0+80.28	2+37.83
2+37.83	PI	844858.159	1889626.706	N 3°12'23.53" E	2+37.83	3+10.97
3+10.97	PI	844931.190	1889630.798	N 1°15'47.67" W	3+10.97	4+06.68
4+06.68	PI	845026.875	1889628.688	N 7°19'53.62" W	4+06.68	4+52.70
4+52.70	PI	845072.524	1889622.814	N 2°41'37.30" W	4+52.70	4+61.74
4+61.74	PC	845081.552	1889622.390		4+61.74	7+13.22
7+13.22	PT	845332.478	1889632.900	N 7°29'27.09" E	7+13.22	7+19.75
7+19.75	PI	845338.956	1889633.752	N14°19'03.85" E	7+19.75	8+43.68
8+43.68	END	845459.031	1889664.399			

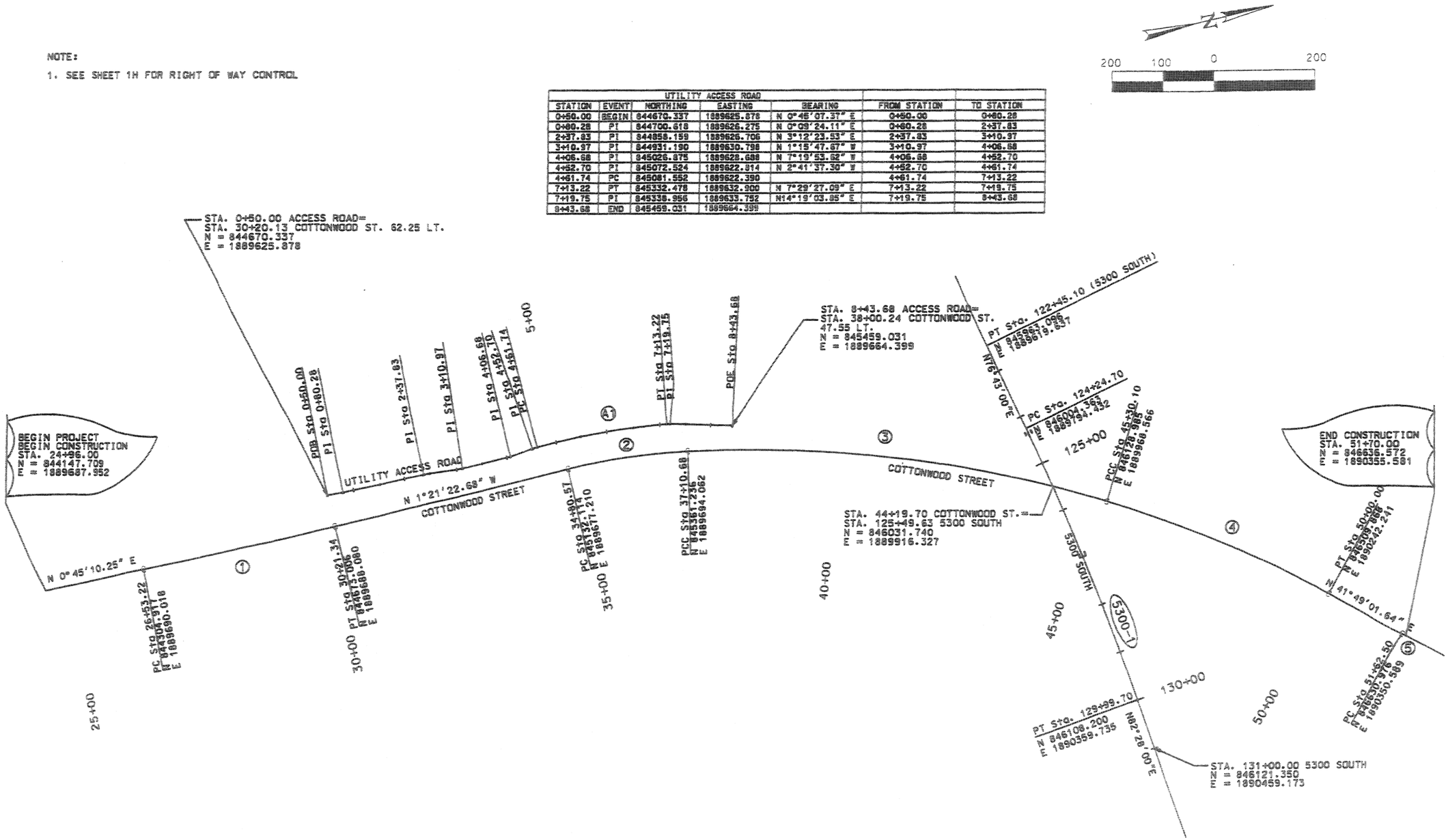

①	Ⓐ1	②	③	④	⑤	5300-1
R 10000.00	R 1414.75	R 1185.00	R 2370.00	R 2200.00	R 2600.00	R 5729.60
DELTA 2°06'32.92" LT.	DELTA 10°11'04.39" RT.	DELTA 11°07'32.18" RT.	DELTA 19°48'35.66" RT.	DELTA 12°14'16.47" RT.	DELTA 28°18'22.64" LT.	DELTA 5°44'59.82" RT.
L 368.12	L 251.48	L 230.10	L 819.42	L 469.90	L 1284.50	L 575.00
T 184.08	T 126.07	T 115.41	T 413.84	T 235.85	T 655.64	T 287.74
PI 28+37.30	PI 5+87.81	PI 35+95.99	PI 41+24.52	PI 47+65.95	PI 58+18.14	PI 127+12.44
N = 844488.979	N = 845207.483	N = 845247.496	N = 845769.077	N = 846334.096	N = 847119.609	N = 846070.477
E = 1889692.437	E = 11889616.465	E = 1889674.478	E = 1889764.283	E = 1890084.987	E = 1890787.739	E = 1890074.479

NO.	DATE	DESCRIPTION
		RELEASE FOR CONSTRUCTION

MURRAY CITY CORPORATION
DEPARTMENT OF PUBLIC SERVICES -- ENGINEERING DIVISION
4646 SOUTH 500 WEST, MURRAY UT, 84123 - (801) 270-2400

DESIGN RTP 8/03 | CHECK TWN 8/03 | QA AUDIT
DRAWN CMW 8/03 | CHECK AJT 8/03 | DATE
QUANT. | CHECK | BY

APPROVAL RECOMM: DATE DESIGN ENGINEER
APPROVED DATE PROJECT MANAGER

COTTONWOOD STREET
5600 SOUTH TO VINE STREET
SURVEY CONTROL SHEET
PROJECT NUMBER #PP-STP-2148(110)
SALT LAKE COUNTY

$FILE$ $DATE$ $TIME$

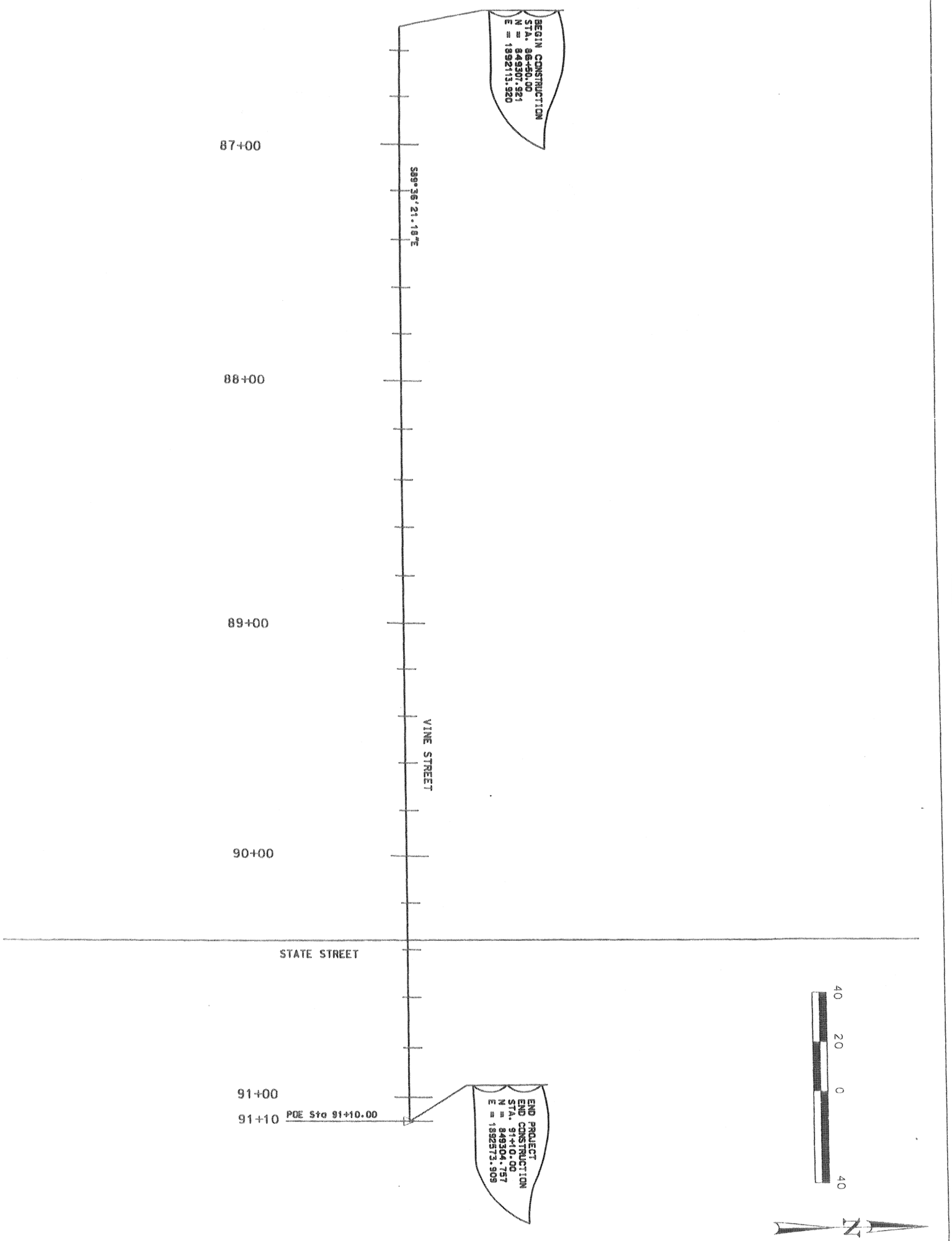

SALT LAKE COUNTY	COTTONWOOD STREET 5600 SOUTH TO VINE STREET SURVEY CONTROL SHEET	MURRAY CITY CORPORATION DEPARTMENT OF PUBLIC SERVICES -- ENGINEERING DIVISION 4646 SOUTH 500 WEST, MURRAY UT, 84123 - (801) 270-2400				RELEASE FOR CONSTRUCTION		
						NO.	DATE	DESCRIPTION
	PROJECT NUMBER *HPP-STP-2148(1)0	APPROVAL RECOMM. ____ DATE DESIGN ENGINEER	DESIGN RTP 8/03	CHECK TVN 8/03	QA ALDIT			
		APPROVED ____ DATE PROJECT MANAGER	DRAWN CMW 8/03	CHECK AJT 8/03	DATE			
			QUANT.	CHECK	BY			

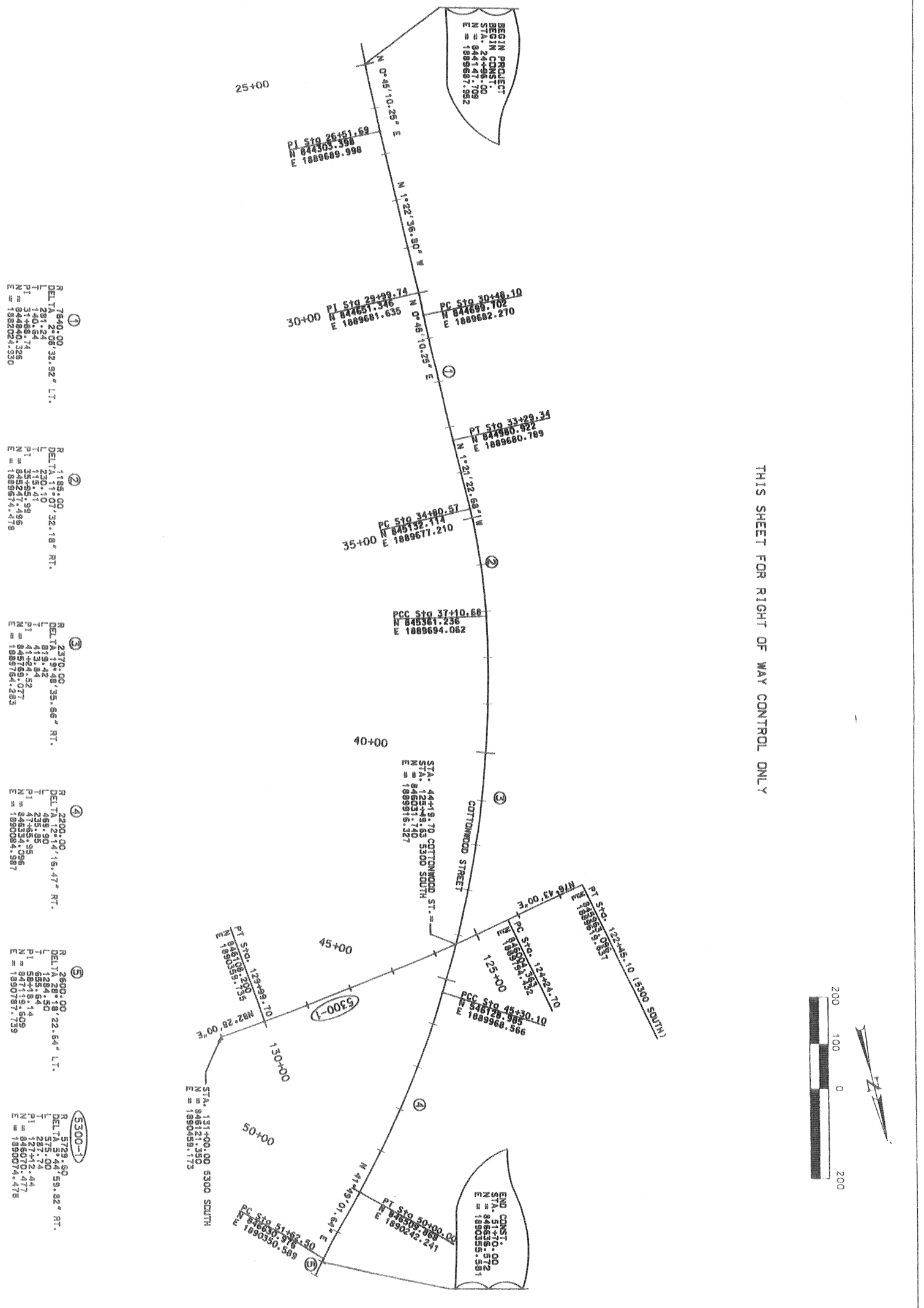

COTTONWOOD STREET	MURRAY CITY CORPORATION					RELEASE FOR CONSTRUCTION		
5600 SOUTH TO VINE STREET	DEPARTMENT OF PUBLIC SERVICES -- ENGINEERING DIVISION					NO.	DATE	DESCRIPTION
RIGHT OF WAY CONTROL SHEET	4646 SOUTH 500 WEST, MURRAY UT, 84123 - (801) 270-2400							
	APPROVAL RECOMM. DATE DESIGN ENGINEER	DESIGN RTP 8/03	CHECK TWH 8/03	QA AUDIT				
	APPROVED DATE PROJECT MANAGER	DRAWN CMW 8/03	CHECK AJT 8/03	DATE				
PROJECT NUMBER *HPP-STP-2148(1)0		QUANT.	CHECK	BY				

SALT LAKE COUNTY

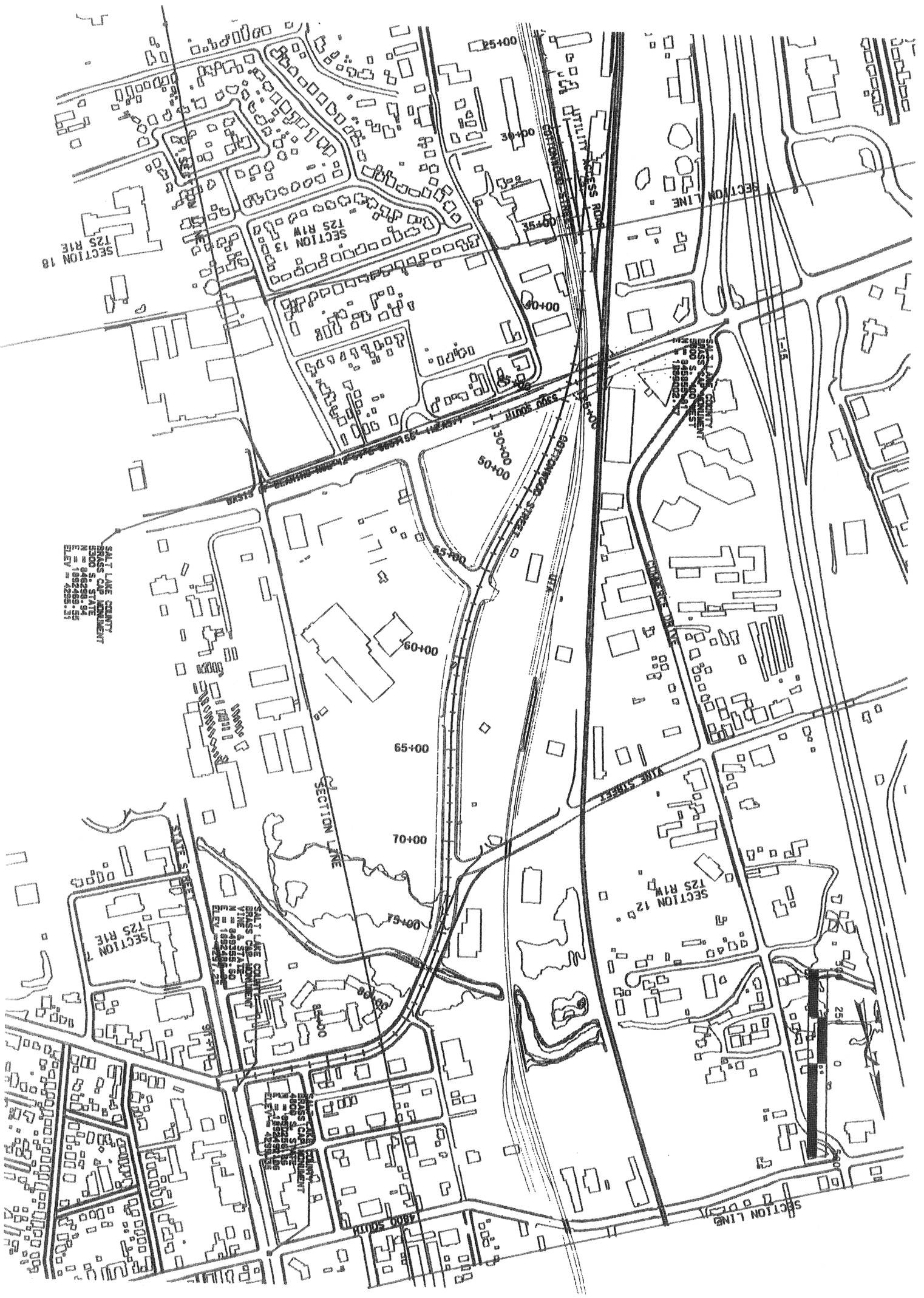

SALT LAKE COUNTY	COTTONWOOD STREET 5600 SOUTH TO VINE STREET SURVEY CONTROL SHEET PROJECT NUMBER *HPP-STP-2148(1)0	MURRAY CITY CORPORATION DEPARTMENT OF PUBLIC SERVICES -- ENGINEERING DIVISION 4646 SOUTH 500 WEST, MURRAY UT, 84123 - (801) 270-2400 APPROVAL RECOMMENDED ____ DATE ____ DESIGN ENGINEER APPROVED ____ DATE ____ PROJECT MANAGER	DESIGN RTP 8/03 DRAWN CNW 8/03 QUANT. ____ CHECK TYH 8/03 CHECK AJT 8/03 CHECK ____ QA AUDIT DATE ____ BY ____	RELEASE FOR CONSTRUCTION		
				NO.	DATE	DESCRIPTION

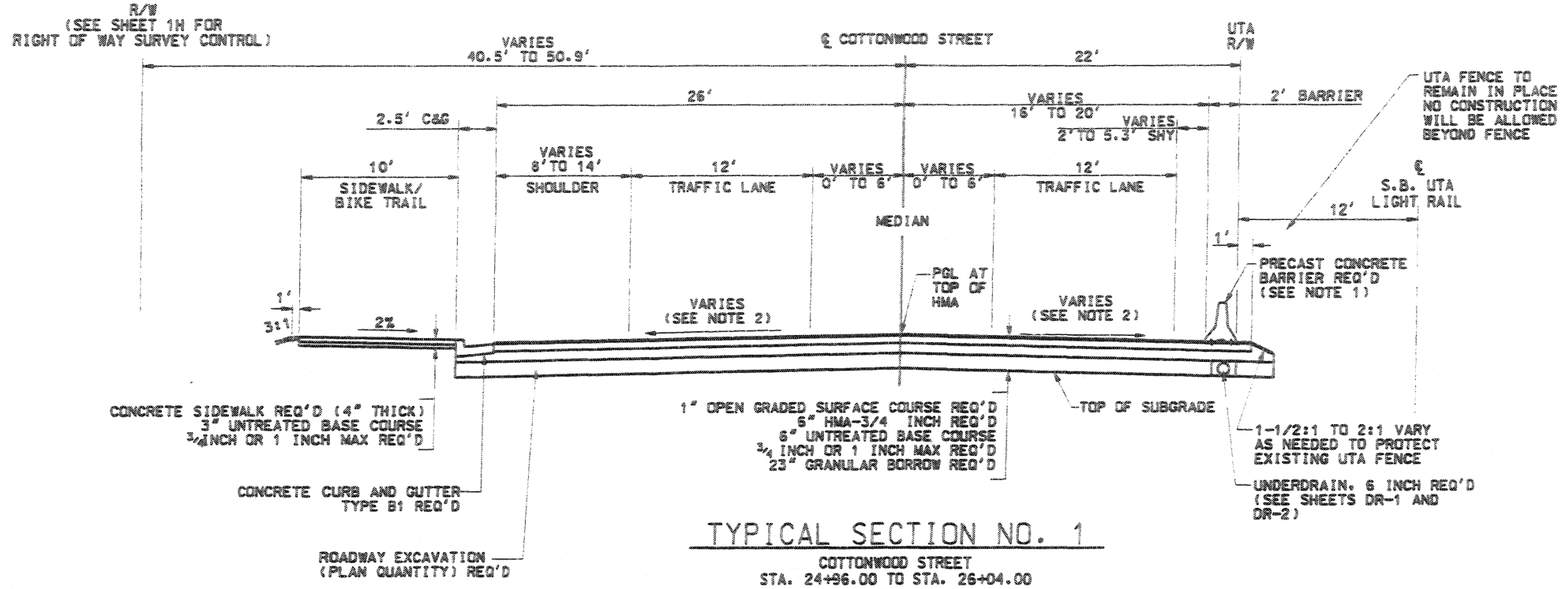

TYPICAL SECTION NO. 1

COTTONWOOD STREET
STA. 24+96.00 TO STA. 26+04.00
DESIGN SPEED = 40 MPH

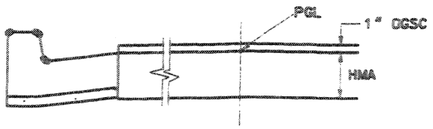

PGL DETAIL

NTS

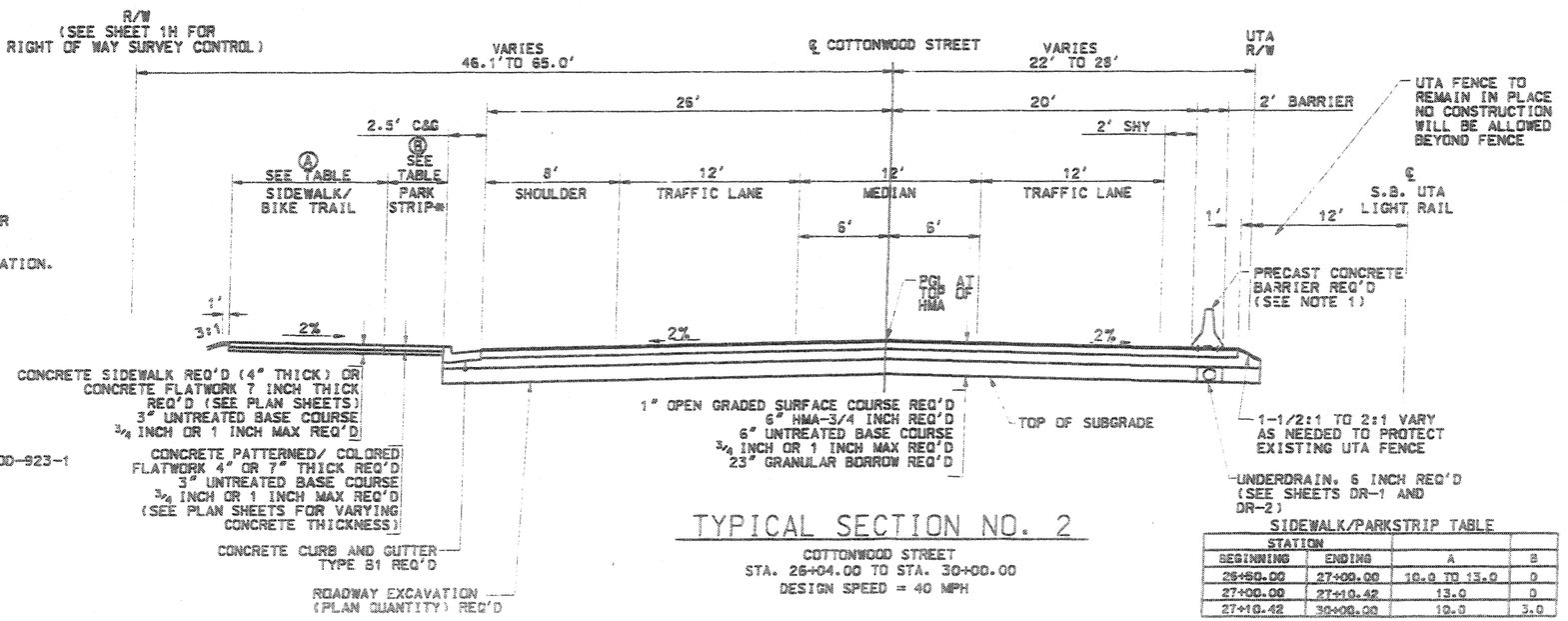

NOTES:

1. STABILIZATION PINS ARE REQUIRED FOR PRECAST CONCRETE FULL BARRIER SEE STANDARD DRAWING BA1A.
2. SEE PROFILE SHEETS FOR SUPERELEVATION.
3. SEE PLAN SHEETS FOR DIMENSIONS OF VARYING WIDTHS.

STA. 29+16.01 LT BEGIN WALL MOD-923-1
(SEE SHEET DT-14)

TYPICAL SECTION NO. 2

COTTONWOOD STREET
STA. 26+04.00 TO STA. 30+00.00
DESIGN SPEED = 40 MPH

SIDEWALK/PARKSTRIP TABLE

STATION			
BEGINNING	ENDING	A	B
26+60.00	27+09.00	10.0 TO 13.0	0
27+00.00	27+10.42	13.0	0
27+10.42	30+00.00	10.0	3.0

* BEGIN PARK STRIP STA. 27+13.33

RELEASE FOR CONSTRUCTION

NO.	DATE	DESCRIPTION

MURRAY CITY CORPORATION
DEPARTMENT OF PUBLIC SERVICES -- ENGINEERING DIVISION
4646 SOUTH 500 WEST, MURRAY UT, 84123 - (801) 270-2400

APPROVAL RECOMM.	DATE	DESIGN ENGINEER	DESIGN RP 5/03	CHECK DTP 9/03	QA AUDIT
APPROVED	DATE	PROJECT MANAGER	DRAWN AT 5/03	CHECK DTP 9/03	DATE
			QUANT. ES 9/03	CHECK	BY

COTTONWOOD STREET
5600 SOUTH TO VINE STREET
TYPICAL SECTION

PROJECT NUMBER *HPP-STP-2148(110)

SALT LAKE COUNTY

SHEET NO. 15

@DATE@ @TIME@

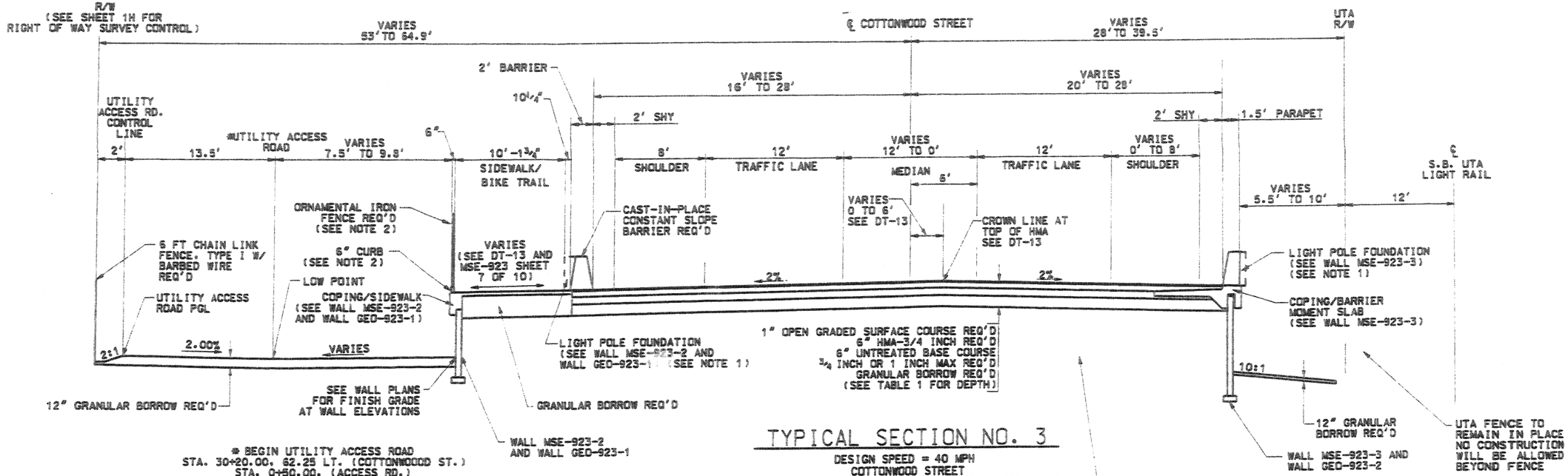

* BEGIN UTILITY ACCESS ROAD
STA. 30+20.00, 62.25 LT. (COTTONWOOD ST.)
STA. 0+50.00. (ACCESS RD.)
(SEE DT-14 FOR ACCESS ROAD TRANSITION GRADING)

TYPICAL SECTION NO. 3

DESIGN SPEED = 40 MPH
COTTONWOOD STREET
STA. 30+00.00 TO STA. 33+20.00 (SEE SHEET DT-13)
UTILITY ACCESS ROAD
STA. 0+50.00 TO STA. 3+49.17

TABLE 1

AREA (SEE GEO-923 SHEET 1 OF 23) FOR LDS LIMITS

	GRANULAR BORROW DEPTH
AREA WITHIN LOAD DISTRIBUTION SLAB LIMITS	12" (MIN)
AREA NOT WITHIN LOAD DISTRIBUTION SLAB LIMITS	23"

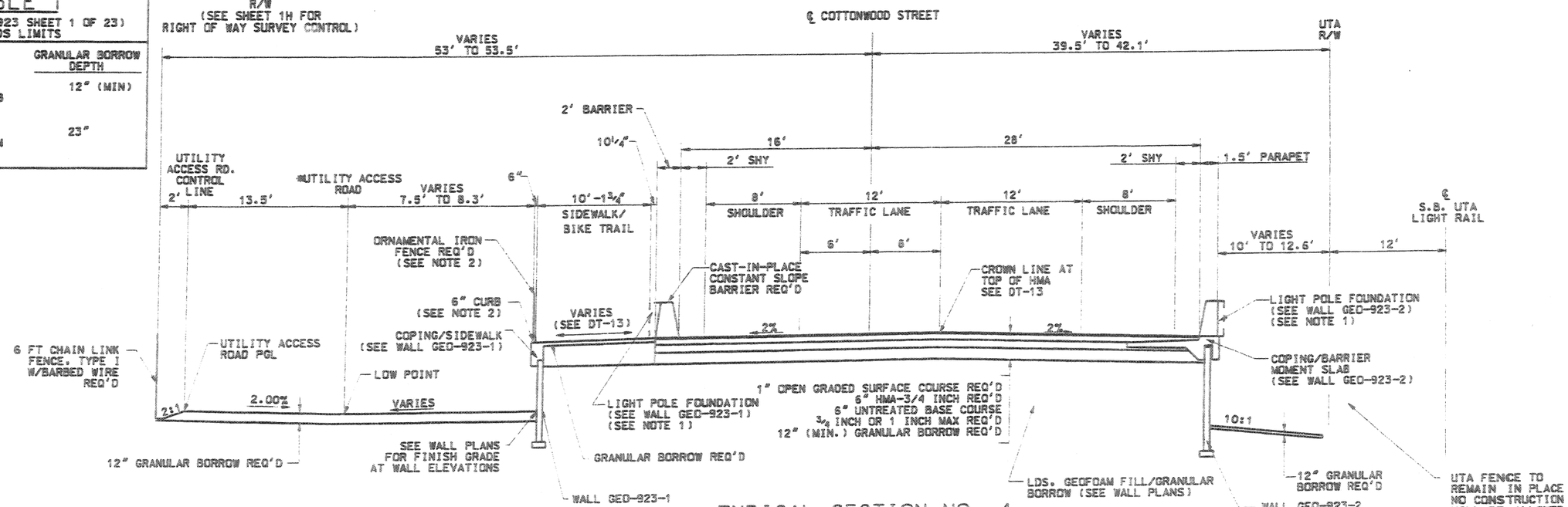

TYPICAL SECTION NO. 4

DESIGN SPEED = 40 MPH
COTTONWOOD STREET
STA. 33+20.00 TO STA. 33+81.37 (SEE SHEET DT-13)
UTILITY ACCESS ROAD
STA. 3+49.17 TO STA. 4+11.78

NOTES:

1. SEE LIGHTING SHEETS FOR LIGHT POLE FOUNDATION LOCATIONS.
2. SEE BRIDGE PLANS FOR 6" CURB AND ORNAMENTAL IRON FENCE DETAILS.
3. SEE PLAN SHEETS FOR DIMENSIONS OF VARYING WIDTHS

RELEASE FOR CONSTRUCTION

NO.	DATE	DESCRIPTION

MURRAY CITY CORPORATION
DEPARTMENT OF PUBLIC SERVICES -- ENGINEERING DIVISION
4646 SOUTH 500 WEST, MURRAY UT, 84123 - (801) 270-2400

DESIGN	RP	5/03	QA AUDIT		
DRAWN	AT	5/03	CHECK	DTP	9/03
QUANT.	ES	9/03	CHECK	DTP	9/03
			CHECK		

APPROVED / RECOMM. — DESIGN ENGINEER — DATE
APPROVED — PROJECT MANAGER — DATE

COTTONWOOD STREET
5600 SOUTH TO VINE STREET
TYPICAL SECTION

PROJECT NUMBER #HPP-STP-2148(1)0

SALT LAKE COUNTY

SHEET NO. DT-12

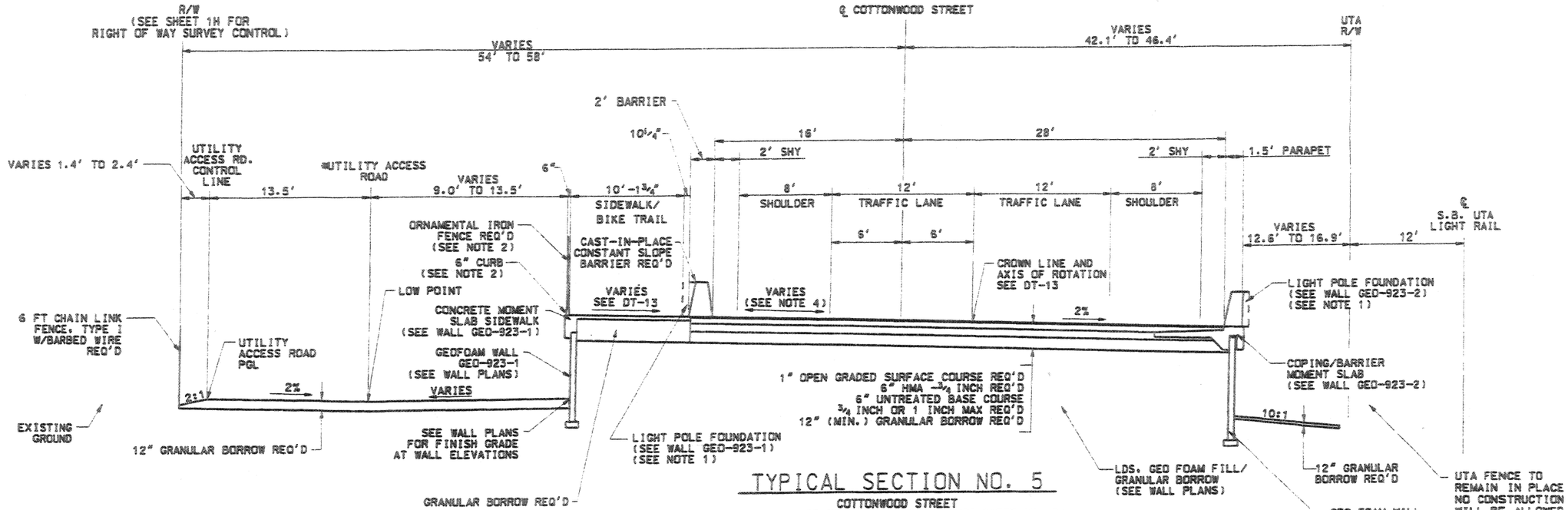

TYPICAL SECTION NO. 5

COTTONWOOD STREET
STA. 33+81.37 TO STA. 35+63.20 (SEE SHEET DT-13)
DESIGN SPEED = 40 MPH
ACCESS ROAD
STA. 4+11.78 TO STA. 6+36.87
STA. 6+36.87 TO STA. 8+43.68 (SEE SHEET DT-15)

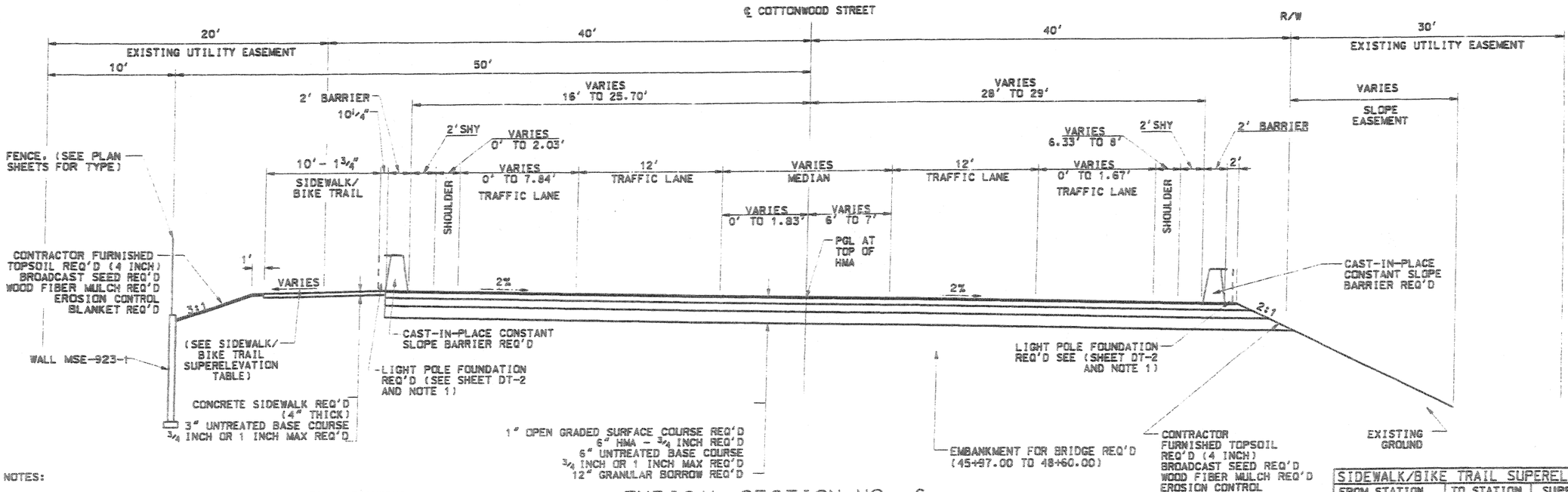

TYPICAL SECTION NO. 6

COTTONWOOD STREET
STA. 46+23.20 TO STA. 48+60.00
DESIGN SPEED = 40 MPH

SIDEWALK/BIKE TRAIL SUPERELEVATION		
FROM STATION	TO STATION	SUPERELEVATION
46+23.20	46+53.20	TRANS +2% TO -2%
46+53.20	48+60.00	-2%

NOTES:

1. SEE LIGHTING SHEETS FOR LIGHT POLE FOUNDATION LOCATIONS.
2. SEE BRIDGE PLANS FOR 6" CURB AND ORNAMENTAL IRON FENCE DETAILS.
3. SEE BRIDGE PLANS FROM STA. 35+63.20 TO STA. 46+23.20.
4. SEE SHEET DT-13.
5. SEE R.O.W. SHEETS FOR DIMENSIONS OF VARYING WIDTHS.

RELEASE FOR CONSTRUCTION

NO.	DATE	DESCRIPTION

MURRAY CITY CORPORATION
DEPARTMENT OF PUBLIC SERVICES -- ENGINEERING DIVISION
4646 SOUTH 500 WEST, MURRAY UT. 84123 -- (801) 270-2400

DESIGN RP 5/03 CHECK DTP 9/03 QA AUDIT
DRAWN AS 5/03 CHECK DTP 9/03 DATE
QUANT. ES 9/03 CHECK BY

APPROVAL RECOMM. DATE DESIGN ENGINEER
APPROVED DATE PROJECT MANAGER

COTTONWOOD STREET
5600 SOUTH TO VINE STREET
TYPICAL SECTION

PROJECT NUMBER ※HPP-STP-2148(110)
SALT LAKE COUNTY

$DATE$ $TIME$

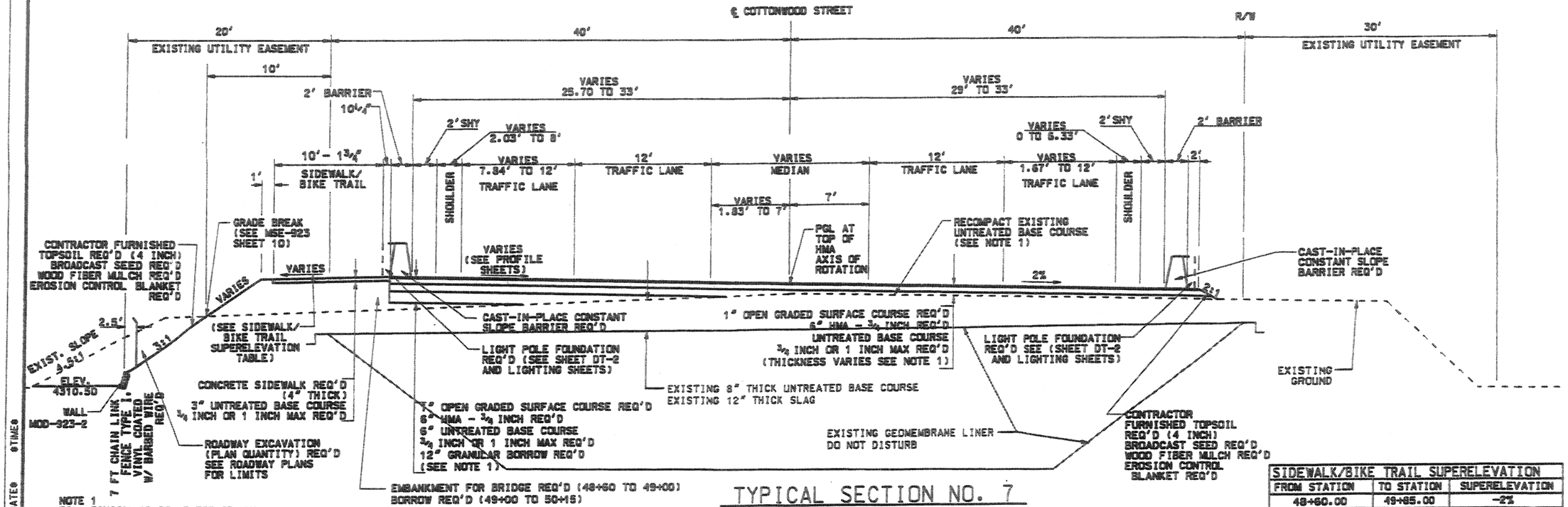

NOTE 1
FG = FINISH GRADE AT TOP OF HMA
UBC = UNTREATED BASE COURSE
GB = GRANULAR BORROW

WHERE EXIST. UBC IS MORE THAN 6" BELOW FG RECOMPACT AND LEAVE IN PLACE.
PLACE FILL TO 24" BELOW FG. PLACE GB TO 12" BELOW FG AND PLACE UBC TO 6" BELOW FG.

WHERE EXIST. UBC IS LESS THAN 6" BELOW FG EXCAVATE TO 6" BELOW FG AND RECOMPACT.

TYPICAL SECTION NO. 7

COTTONWOOD STREET
STA. 48+60.00 TO STA. 50+15.00
DESIGN SPEED = 40 MPH

SIDEWALK/BIKE TRAIL SUPERELEVATION		
FROM STATION	TO STATION	SUPERELEVATION
48+60.00	49+85.00	-2%
49+85.00	50+15.00	TRANS -2% TO +2%

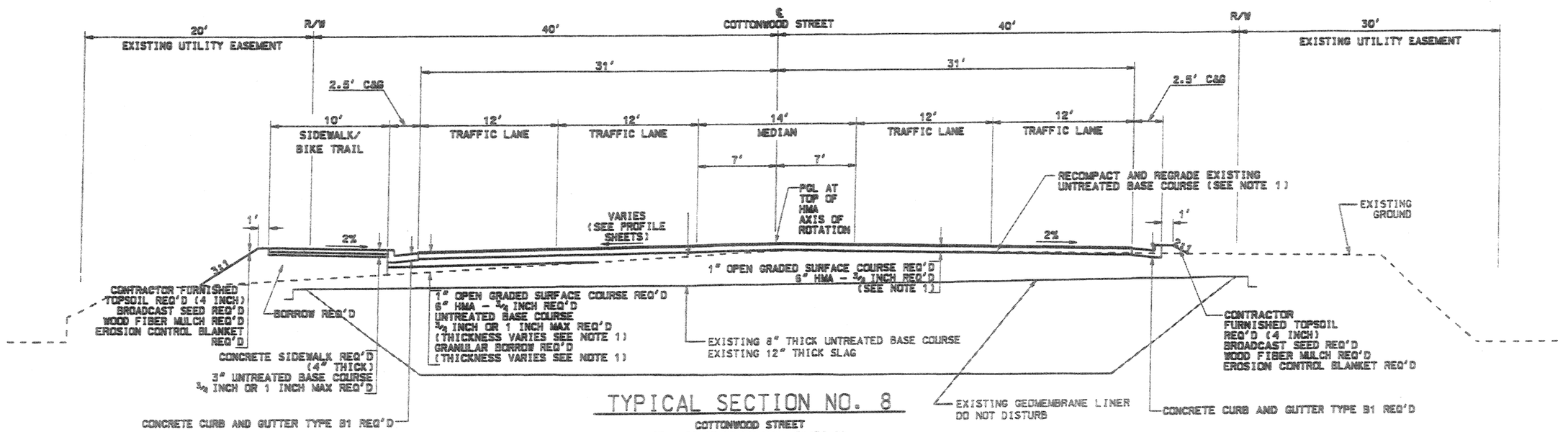

TYPICAL SECTION NO. 8

COTTONWOOD STREET
STA. 50+15.00 TO STA. 51+70.00
DESIGN SPEED = 40 MPH

RELEASE FOR CONSTRUCTION

NO.	DATE	DESCRIPTION

MURRAY CITY CORPORATION
DEPARTMENT OF PUBLIC SERVICES -- ENGINEERING DIVISION
4646 SOUTH 500 WEST, MURRAY UT. 84123 -- (801) 270-2400

DESIGN RP 5/03	CHECK DTP 5/03	QA AUDIT
DRAWN AT 5/03	CHECK DTP 5/03	DATE
QUANT. ES 5/03	CHECK	BY

RECOMMENDED DESIGN ENGINEER DATE
APPROVED PROJECT MANAGER DATE

COTTONWOOD STREET
5600 SOUTH TO VINE STREET
TYPICAL SECTION
PROJECT NUMBER ※HPP-STP-2148(110

SALT LAKE COUNTY
SHEET NO. 15 OF

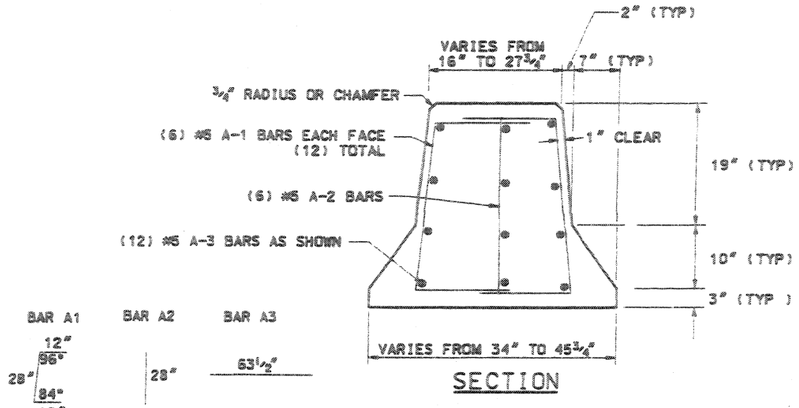

SECTION

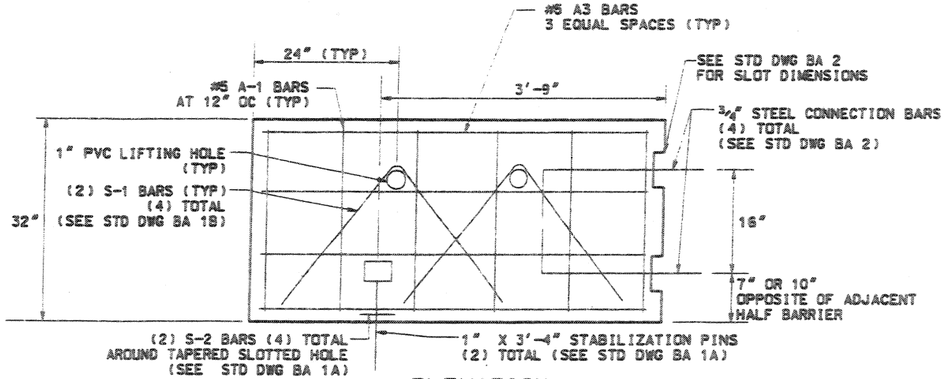

ELEVATION

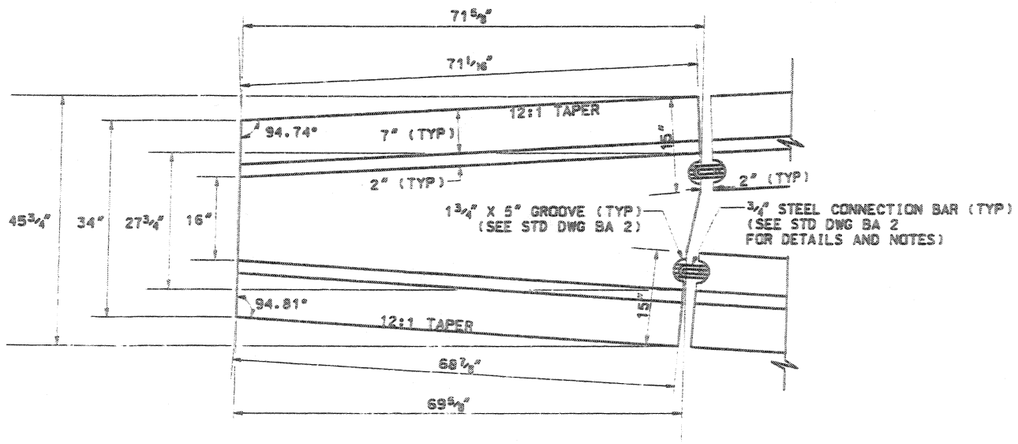

BARRIER TRANSITION DETAIL PLAN

NOTES:

1. PRECAST BARRIER TRANSITION.
2. FILTER FABRIC SHALL BE PLACED AT ALL VERTICAL BARRIER JOINTS TO RETAIN THE GRANULAR BORROW. GLUE FILTER FABRIC TO BARRIER. PROVIDE 2' OVERLAP EACH SIDE OF JOINT.
3. SEE NOTES ON STD DWGS BA 1A, BA 1B, AND BA 2

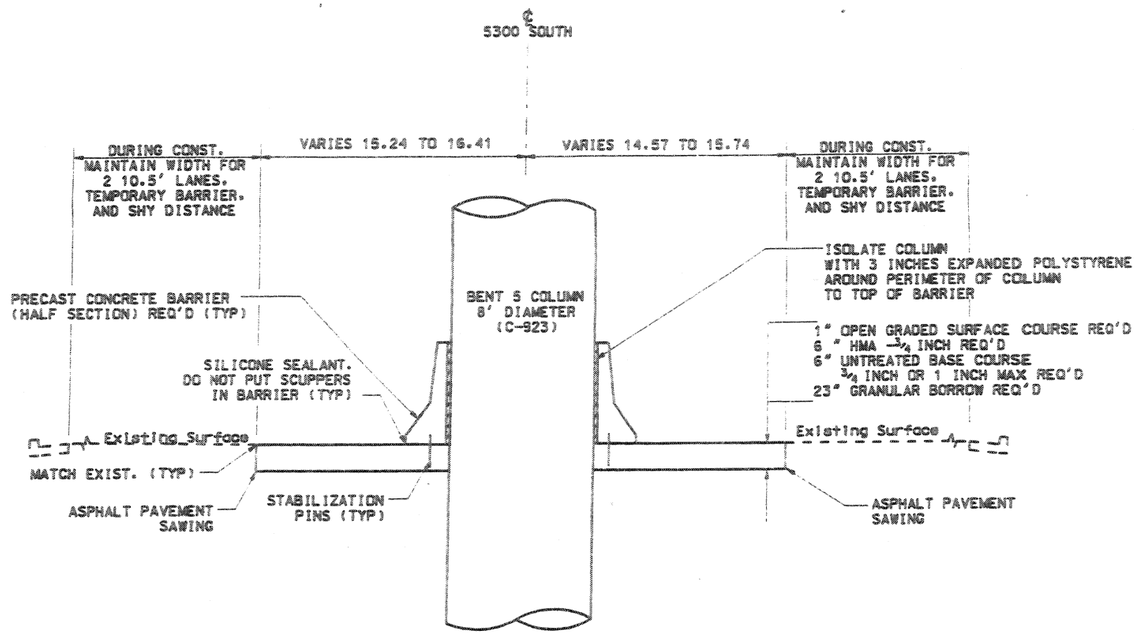

SECTION A-A FROM RD-8

DESIGN SPEED 45 MPH
125+33.89 TO STA 125+66.03

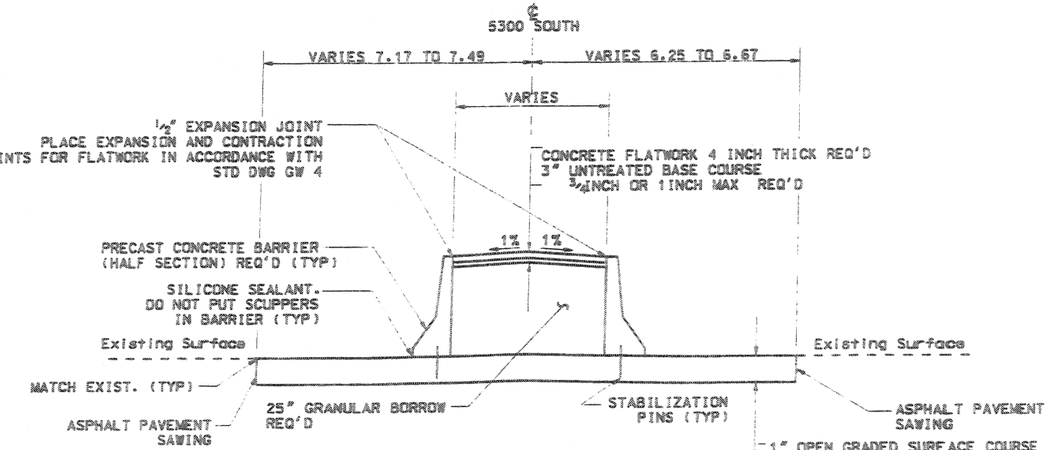

SECTION B-B FROM RD-8

DESIGN SPEED 45 MPH
STA 124+31.81 TO 125+34.65
STA 125+65.15 TO 126+97.69

RELEASE FOR CONSTRUCTION

NO.	DATE	DESCRIPTION

MURRAY CITY CORPORATION
DEPARTMENT OF PUBLIC SERVICES -- ENGINEERING DIVISION
4646 SOUTH 500 WEST, MURRAY UT, 84123 - (801) 270-2400

	DESIGN	ES	9/03	QA AUDIT	
APPROVAL RECOMMENDED	DRAWN	ES	9/03	CHECK	DTP 10/03
	QUANT.	ES	9/03	CHECK	DTP 10/03
DATE	DESIGN ENGINEER			DATE	10/03
APPROVED	PROJECT MANAGER			BY	
DATE					

COTTONWOOD STREET
5600 SOUTH TO VINE STREET

5300 SOUTH MEDIAN DETAILS

PROJECT NUMBER *HPP-STP-2148(1)0

SALT LAKE COUNTY

SHEET NO. DT-1

$DATE$ $TIME$

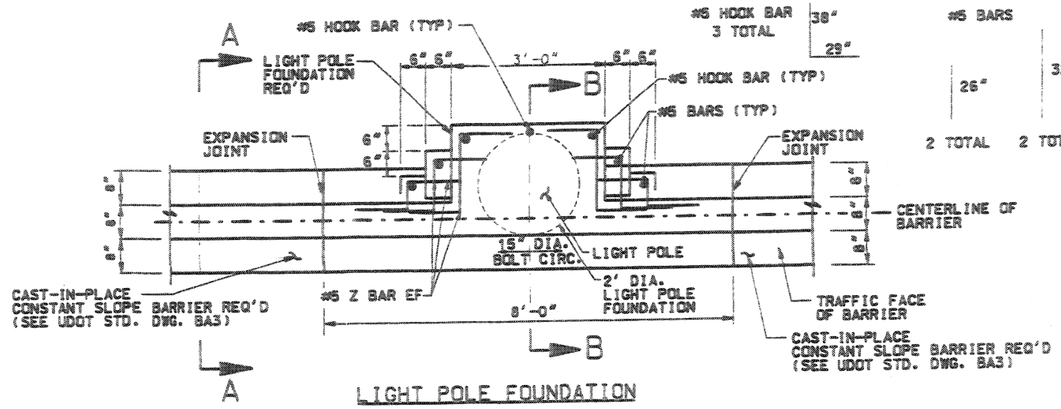

LIGHT POLE FOUNDATION
PLAN
NTS

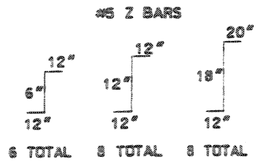

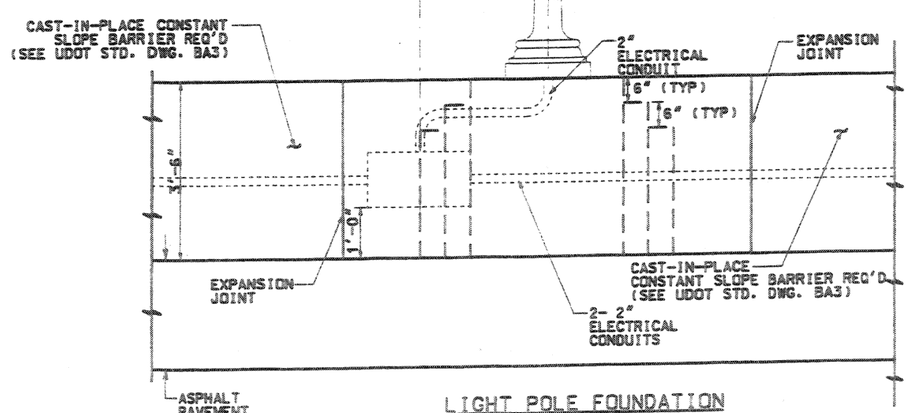

LIGHT POLE FOUNDATION
ELEVATION
NTS

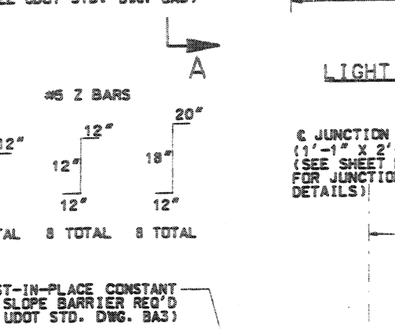

JOINT DETAIL

TEMPERATURE (DEG F)	DIMENSION A
90	1¼" (SEE NOTE 3)
60	1½"
35	1¼" (SEE NOTE 3)

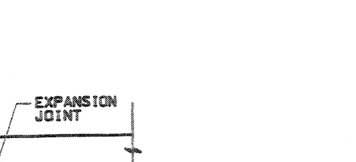

SECTION C-C
NTS

NOTES:

1. USE CLASS AA (AE) CONCRETE
2. USE COATED DEFORMED BILLET-STEEL BARS CONFORMING TO AASHTO M-31 GRADE 60
3. DO NOT INSTALL JOINT SEALANT ABOVE 50°F. OR BELOW 50°F.
4. SEE SPECIAL PROVISION 16SBSM FOR ADDITIONAL [illegible]

#5 BARS

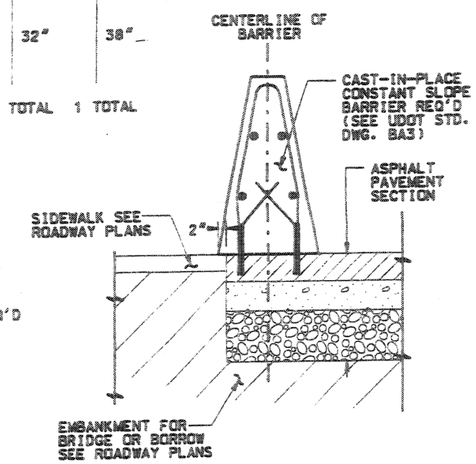

SECTION A-A LEFT
NTS

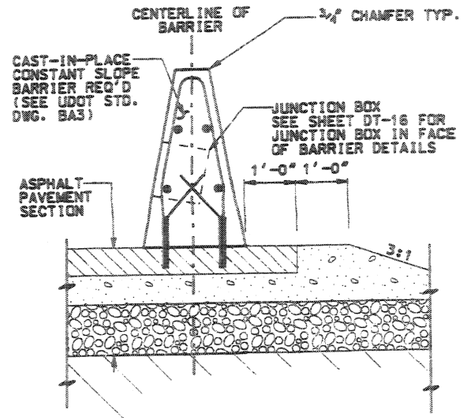

SECTION A-A RIGHT
NTS

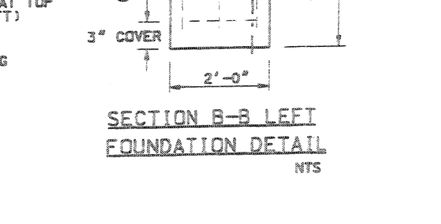

SECTION B-B LEFT
FOUNDATION DETAIL
NTS

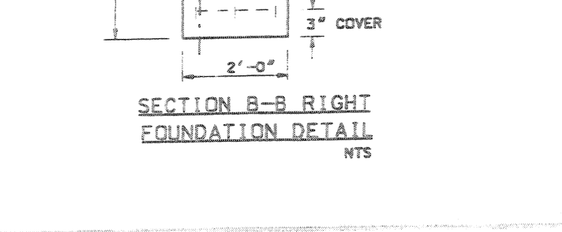

SECTION B-B RIGHT
FOUNDATION DETAIL
NTS

RELEASE FOR CONSTRUCTION

NO.	DATE	DESCRIPTION

MURRAY CITY CORPORATION
DEPARTMENT OF PUBLIC SERVICES -- ENGINEERING DIVISION
4646 SOUTH 500 WEST, MURRAY UT. 84123 - (801) 270-2400

DESIGN DCO 8/03 | CHECK DJP 10/03 | QA AUDIT
DRAWN ES 8/03 | CHECK DJP 10/03 | DATE
QUANT. | CHECK | BY

DESIGN ENGINEER — DATE
PROJECT MANAGER — DATE
APPROVAL RECOMM. — APPROVED — DATE

COTTONWOOD STREET
5600 SOUTH TO VINE STREET
BARRIER DETAIL

PROJECT NUMBER *HPP-STP-2148(1)0

SALT LAKE COUNTY

DT-2

@TIME @DATE @FILES

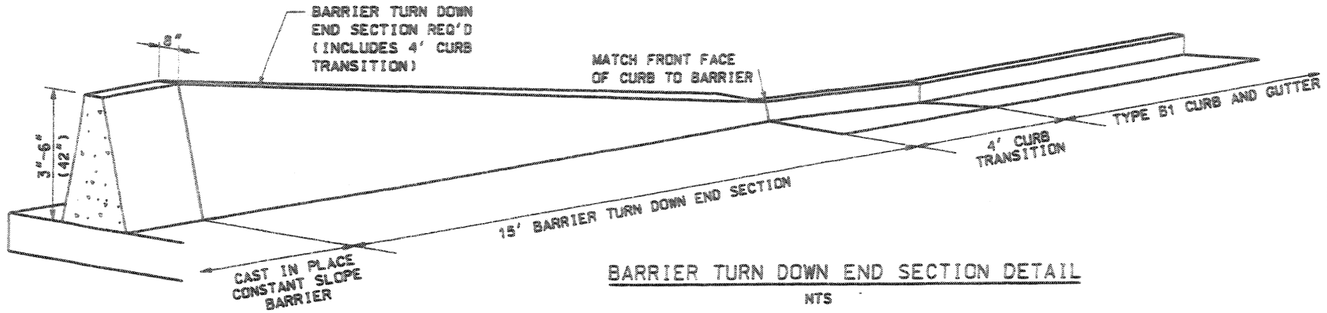

BARRIER TURN DOWN END SECTION DETAIL

NTS

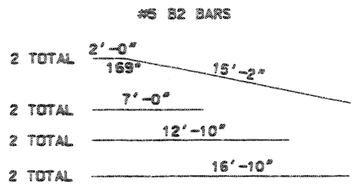

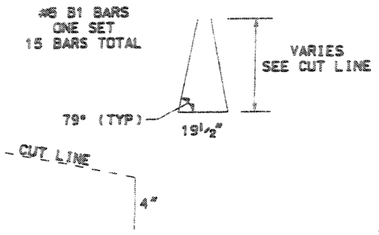

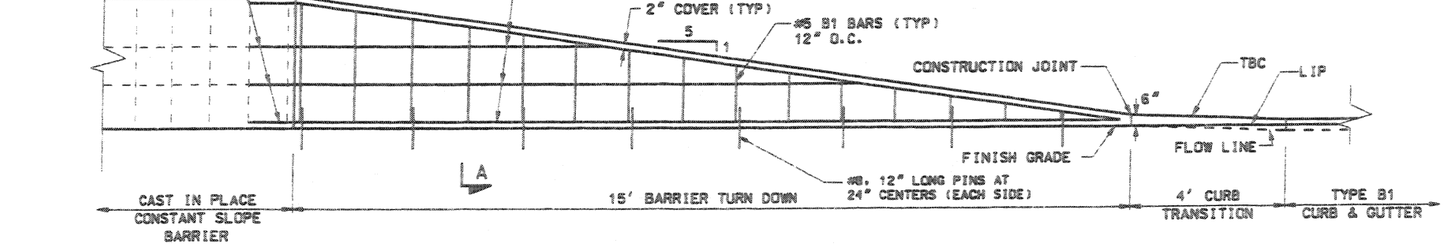

ELEVATION

NTS

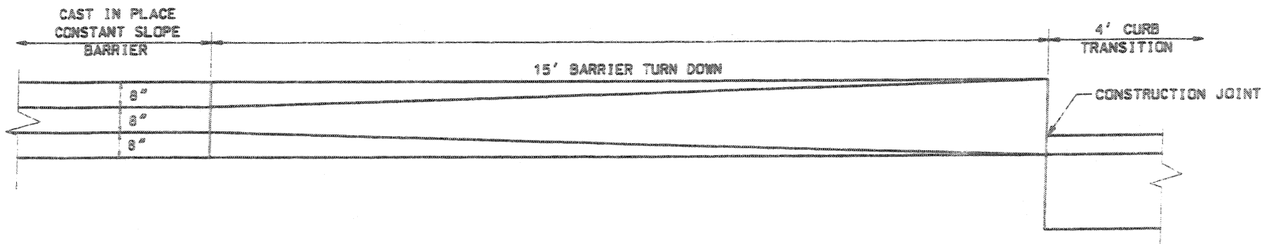

PLAN VIEW

NTS

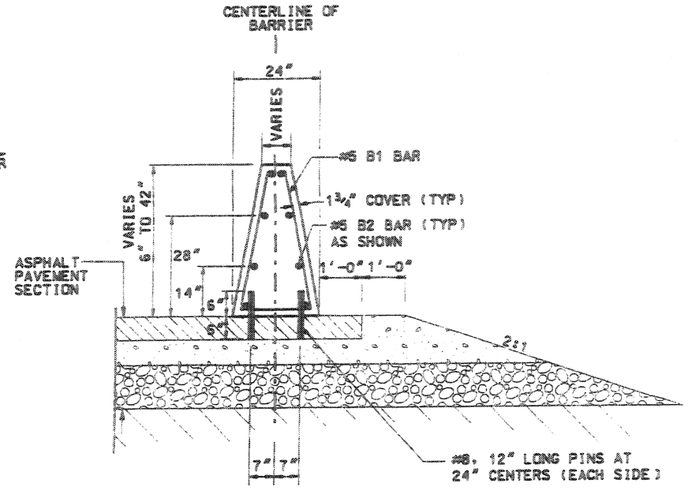

SECTION A-A RIGHT

NTS

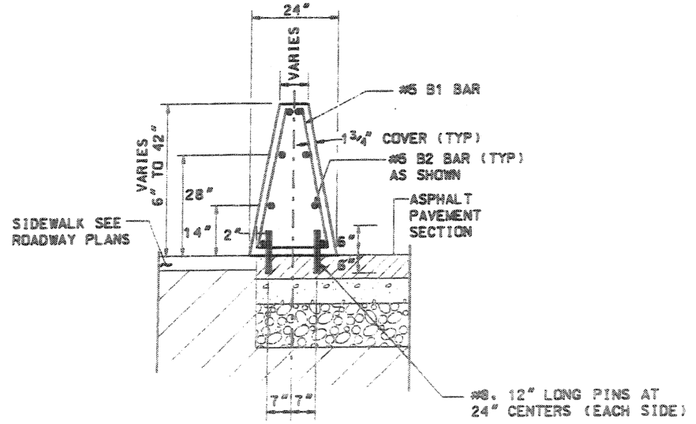

SECTION A-A LEFT

NTS

NOTES:

1. USE CLASS AA (AE) CONCRETE.
2. USE COATED DEFORMED BILLET-STEEL BARS CONFORMING TO AASHTO M-31 GRADE 60.
3. SEE UDOT STD. DWG. GW 9 FOR DELINEATION HARDWARE AND UDOT STD. DWG. GW 10 FOR DELINEATION SPACING.
4. PROVIDE ALTERNATING REINFORCING STEEL SPLICES WITH 2'-0" MIN LAP SPLICE UNLESS OTHERWISE NOTED. 2'-0" MIN LAP SPLICE UNLESS OTHERWISE NOTED.
5. PROVIDE 2" MIN COVER TO REINFORCING STEEL UNLESS OTHERWISE NOTED.

RELEASE FOR CONSTRUCTION

NO.	DATE	DESCRIPTION

MURRAY CITY CORPORATION
DEPARTMENT OF PUBLIC SERVICES -- ENGINEERING DIVISION
4646 SOUTH 500 WEST, MURRAY UT, 84123 - (801) 270-2400

DESIGN CP 8/03	CHECK DTP 10/03	QA AUDIT
DRAWN BN 8/03	CHECK DTP 10/03	DATE
QUANT. CP 8/03	CHECK DTP 10/03	BY

APPROVAL RECOMMENDED: DESIGN ENGINEER — DATE
APPROVED: PROJECT MANAGER — DATE

COTTONWOOD STREET
5600 SOUTH TO VINE STREET
BARRIER TURN DOWN

PROJECT NUMBER #HPP-STP-2148(1)0

SALT LAKE COUNTY

SHEET NO. 13 OF 34

DATES STIMES

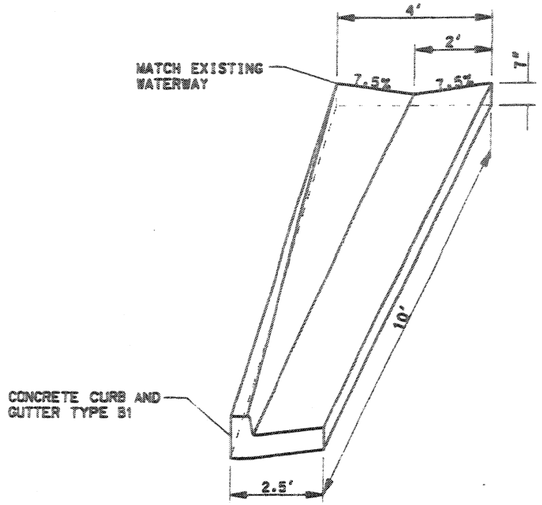

CURB AND GUTTER TRANSITION DETAIL

NTS

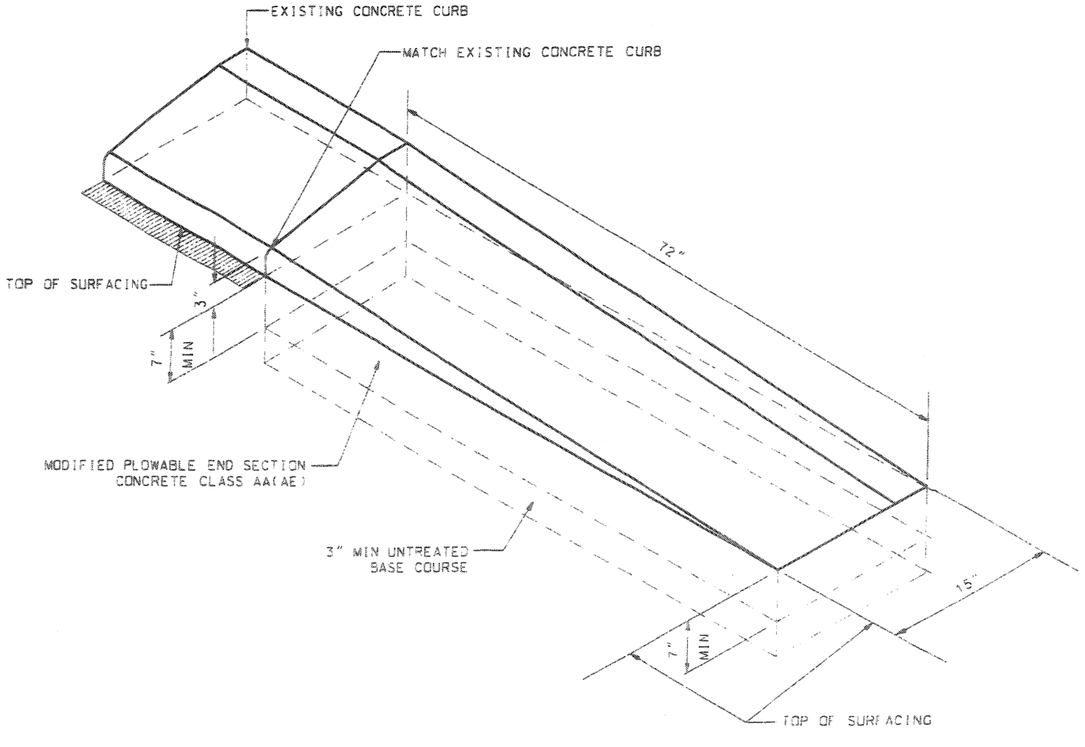

MODIFIED PLOWABLE END SECTION DETAIL

NTS

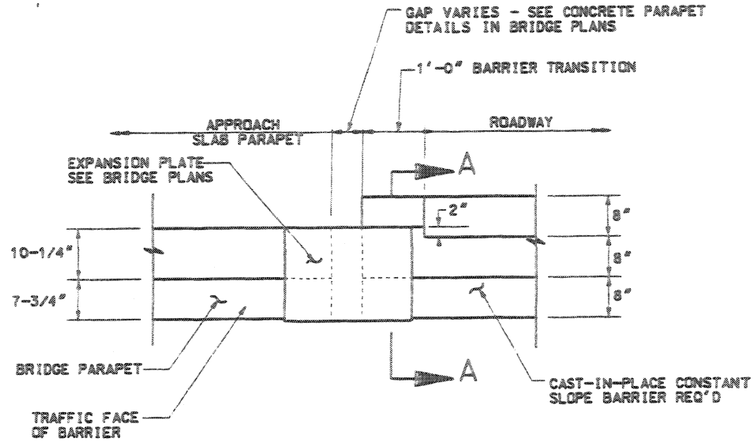

BARRIER TO PARAPET TRANSITION DETAIL PLAN

NTS

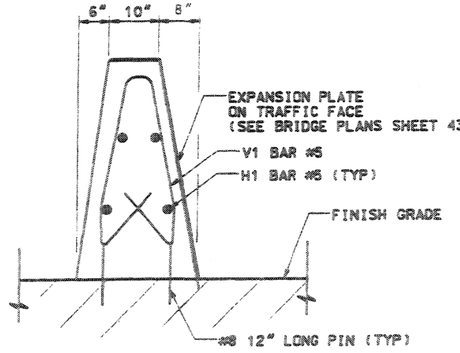

SECTION A-A

NTS

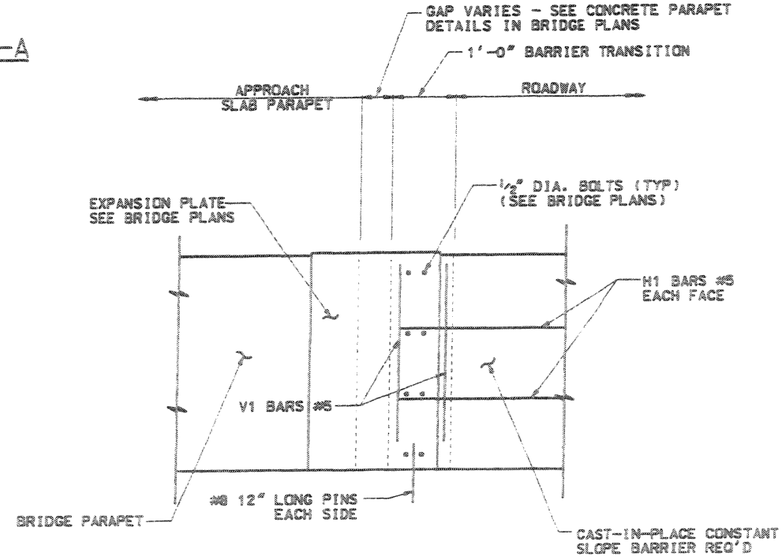

ELEVATION

NTS

RELEASE FOR CONSTRUCTION

NO.	DATE	DESCRIPTION

MURRAY CITY CORPORATION
DEPARTMENT OF PUBLIC SERVICES -- ENGINEERING DIVISION
4646 SOUTH 500 WEST, MURRAY UT. 84123 - (801) 270-2400

DESIGN ES 8/03 CHECK DTP 10/03 QA AUDIT
DRAWN ES 8/03 CHECK DTP 10/03 DATE
QUANT. ES 8/03 CHECK DTP 10/03 BY

APPROVAL RECOMM. _____ DATE _____ DESIGN ENGINEER
APPROVED _____ DATE _____ PROJECT MANAGER

COTTONWOOD STREET
5600 SOUTH TO VINE STREET
BARRIER AND CURB DETAILS

PROJECT NUMBER *HPP-STP-2148(110

SALT LAKE COUNTY

SHEET NO. 44 OF 54

DATES @TIME @

FILES

SECTION A-A
NTS

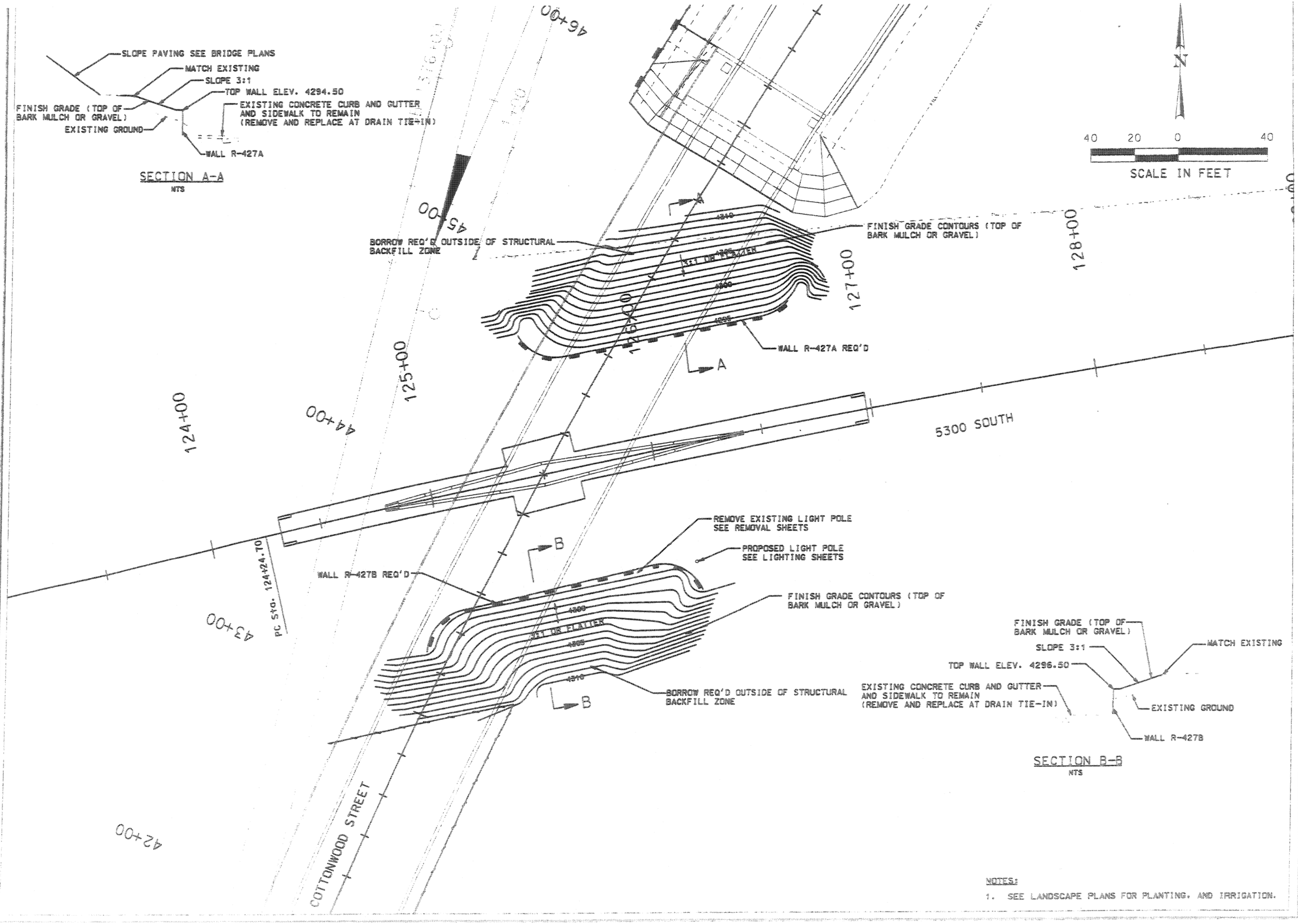

SECTION B-B
NTS

NOTES:

1. SEE LANDSCAPE PLANS FOR PLANTING, AND IRRIGATION.

RELEASE FOR CONSTRUCTION

NO.	DATE	DESCRIPTION

MURRAY CITY CORPORATION
DEPARTMENT OF PUBLIC SERVICES -- ENGINEERING DIVISION
4646 SOUTH 500 WEST, MURRAY UT, 84123 -- (801) 270-2400

DESIGN	BJ	6/03	CHECK	DTP
DRAWN	BCN	6/03	CHECK	DTP
QUANT.	BJ	9/03	CHECK	

APPROVAL RECOMM.	DATE	DESIGN ENGINEER	QA AUDIT
APPROVED	DATE	PROJECT MANAGER	DATE

COTTONWOOD STREET
5600 SOUTH TO VINE STREET
GRADING PLAN

PROJECT NUMBER *HPP-STP-2148(1)0

SALT LAKE COUNTY

SHEET NO. 07.16

$TIME$
$DATE$
$FILES$

$DATE$ $TIME$

TRENCH BACKFILL WATER AND SEWER ONLY

NOTES:

1. BACKFILL: LIMIT MAXIMUM PARTICLE SIZE IN TRENCHBACKFILL MATERIAL TO 6 INCHES.
   A. BACKFILL MATERIAL. PLACE BACKFILL PER SECTION 02317.
2. PAVEMENT RESTORATION: DO NOT INSTALL ASPHALT OR CONCRETE SURFACING UNTIL TRENCH COMPACTION IS ACCEPTED BY ENGINEER.
3. PEA GRAVEL: PEA GRAVEL AND "SQUEEGY" IS NOT ALLOWED IN ANY PART OF THE TRENCH.

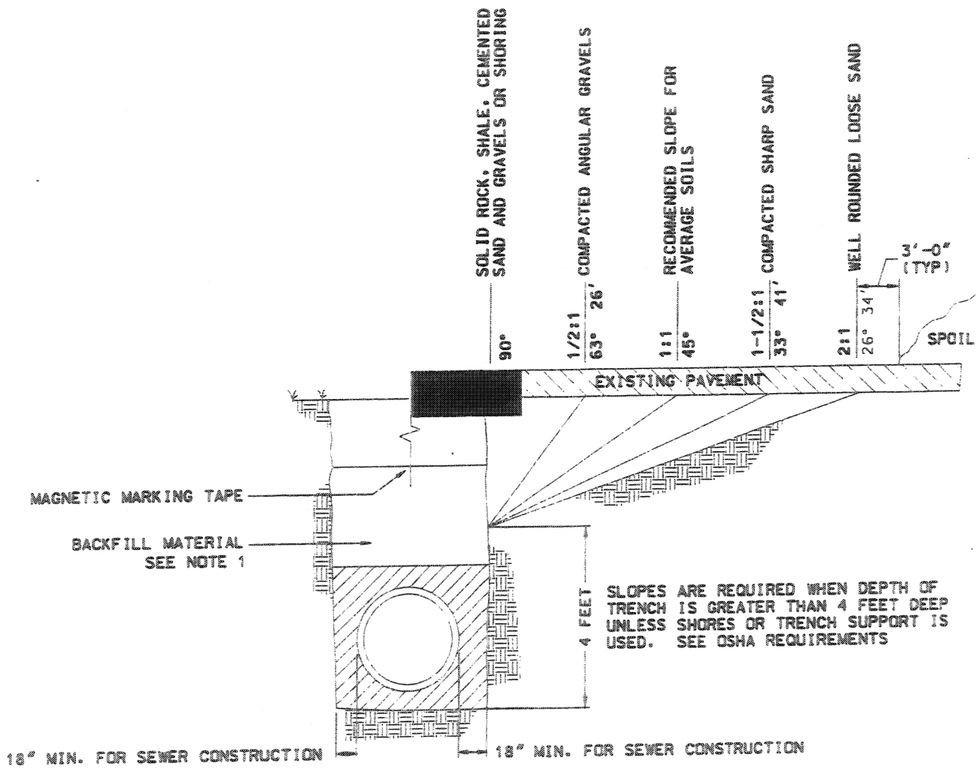

SECTION

* PIPE ZONE BACKFILL FOR WATER SHALL BE SAND TO ONE FOOT ABOVE TOP OF PIPE

$FILES$

RELEASE FOR CONSTRUCTION

NO.	DATE	DESCRIPTION

MURRAY CITY CORPORATION
DEPARTMENT OF PUBLIC SERVICES -- ENGINEERING DIVISION
4646 SOUTH 500 WEST, MURRAY UT. 84123 - (801) 270-2400

DESIGN JCD 7/03 | CHECK BSS 7/03 | QA AUDIT
DRAWN BCN 7/03 | CHECK BCN 7/03 | DATE
QUANT. | CHECK | BY

APPROVAL RECOMM. DATE — DESIGN ENGINEER
APPROVED DATE — PROJECT MANAGER

COTTONWOOD STREET
5600 SOUTH TO VINE STREET
APWA DETAIL 381
PROJECT NUMBER *HPP-STP-2148(1)0

SALT LAKE COUNTY

SHEET NO. DT-6

$FILE$

$DATE$ $TIME$

SHEET NOT USED

	COTTONWOOD STREET 5600 SOUTH TO VINE STREET	MURRAY CITY CORPORATION DEPARTMENT OF PUBLIC SERVICES -- ENGINEERING DIVISION 4646 SOUTH 500 WEST, MURRAY UT, 84123 -- (801) 270-2400				RELEASE FOR CONSTRUCTION		
						NO.	DATE	DESCRIPTION
		APPROVAL RECOMM. DATE DESIGN ENGINEER	DESIGN	CHECK	QA AUDIT			
	PROJECT NUMBER *HPP-STP-2148(1)0	APPROVED DATE PROJECT MANAGER	DRAWN	CHECK	DATE			
			QUANT.	CHECK	BY			

SANITARY SEWER MANHOLE

NOTES:

1. BACKFILL: PROVIDE AND PLACE PER SECTION 02317. COMPACT PER SECTION 02324.
2. CONCRETE: PLACE PER SECTION 03310.
3. MANHOLE SIZE: 48" DIAMETER.
4. GROUT: GROUT AROUND ALL PIPE OPENINGS WITH 2:1 SAND/CEMENT MORTAR.
5. JOINTS: PLACE FLEXIBLE GASKET-TYPE SEALANT IN ALL MANHOLE JOINTS. INSTALLATION OF STABILIZATION-SEPARATION GEOTEXTILE PER SECTION 02075 WILL BE REQUIRED TO SEPARATE BACKFILL MATERIAL AND NATIVE SUBGRADE MATERIALS IF SEWER ROCK CANNOT PROVIDE A WORKING SURFACE.
6. ALTERNATES:
   A. PRECAST REINFORCED CONCRETE WALLS 5 INCHES THICK (TO BE ACCEPTABLE TO THE ENGINEER).
   B. CAST-IN-PLACE CONCRETE TO BE 8 INCHES THICK MINIMUM.
7. INVERT COVERS: PLACE INVERT COVERS OVER THE TOP OF PIPE IN ALL MANHOLES DURING CONSTRUCTION. SEE APWA PLAN NO. 412.
8. WATER STOPS: INSTALL RUBBER WATER-STOP ON ALL PLASTIC PIPE WHEN CONNECTING PLASTIC PIPES TO MANHOLES. HOLD WATER-STOP IN PLACE WITH STAINLESS STEEL BANDS.
9. STEPS, GRADE RINGS, AND LIDS TO BE INCLUDED IN THE COST OF THE MANHOLE.

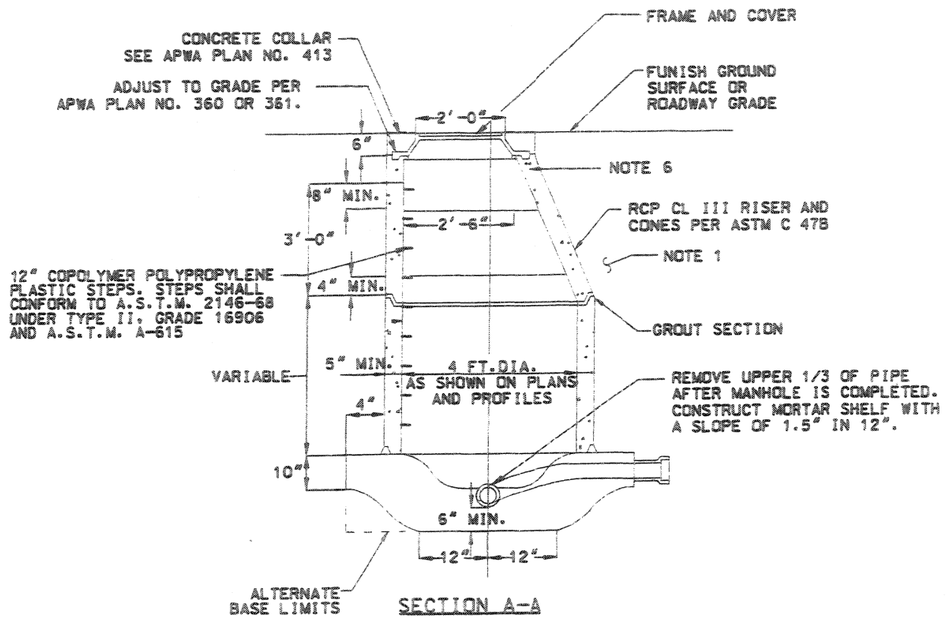

SECTION A-A

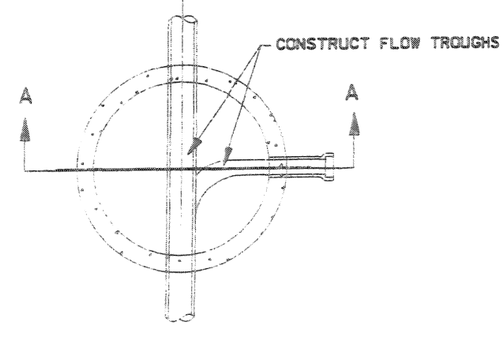

PLAN

PRECAST CONCRETE SEWER MANHOLE

N.T.S.

RELEASE FOR CONSTRUCTION

NO.	DATE	DESCRIPTION

MURRAY CITY CORPORATION
DEPARTMENT OF PUBLIC SERVICES — ENGINEERING DIVISION
4646 SOUTH 500 WEST, MURRAY UT, 84123 - (801) 270-2400

DESIGN	JCD	7/03	CHECK	BSS	7/03
DRAWN	BCN	7/03	CHECK	BCN	7/03
QUANT.			CHECK		

QA AUDIT DATE BY

APPROVAL RECOMM. DESIGN ENGINEER DATE

APPROVED PROJECT MANAGER DATE

COTTONWOOD STREET
5600 SOUTH TO VINE STREET
APWA DETAIL 411

PROJECT NUMBER *HPP-STP-2148(110

SALT LAKE COUNTY

SHEET NO. 27 OF 60

@DATE@ @TIME@ @FILE@

FIRE HYDRANT WITH VALVE

NOTES:

1. INSPECTION: PRIOR TO BACKFILLING, SECURE INSPECTION OF INSTALLATION BY ENGINEER.
2. BACKFILL: PROVIDE AND PLACE PER SECTION 02317. COMPACT PER SECTION 02324.
3. HYDRANT: DRY BARREL (MUELLER A-423) PER AWWA C502. ADDITIONAL WATER SYSTEM REQUIREMENTS ARE SPECIFIED IN SECTION 02511S.
   A. PROVIDE AT LEAST 1 CUBIC YARD OF SECTION 02061 FREE DRAINING GRANULAR BACKFILL BORROW AROUND DRAIN HOLE AT BASE OF HYDRANT. WRAP PLASTIC OVER FREE DRAINING GRANULAR BACKFILL BORROW TO PREVENT SILTING.
   B. PAINT FIRE HYDRANT TO AGENCY'S FIRE HYDRANT PAINT CODE.
   C. APPLY POLY-FM GREASE TO ALL BURIED METAL SURFACES. WRAP WITH 8 MIL THICK POLYETHYLENE SHEET AND TAPE WRAP.
   D. NOTIFY THE FIRE DEPARTMENT AS SOON AS HYDRANT IS PLACED IN SERVICE.
4. THRUST BLOCKS:
   A. PRIOR TO POURING CONCRETE, WRAP PIPE SYSTEM WITH 8 MIL THICK PLASTIC SHEET TO PREVENT BONDING OF CONCRETE TO PIPE SYSTEM.
   B. NOT REQUIRED FOR FLANGE OR WELDED PIPE SYSTEM.

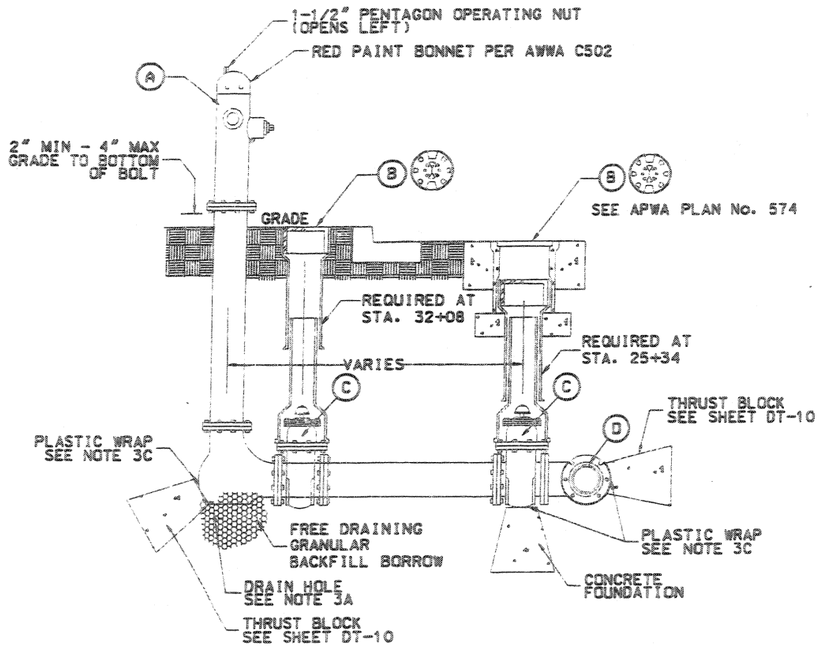

SECTION

LEGEND			
No.	*	ITEM	DESCRIPTION
A		FIRE HYDRANT	AWWA C502
B		2 PC VALVE BOX	CAST IRON
C		GATE VALVE WITH 2" x 2" NUT	AWWA C509
D		TEE WITH 125# FLANGE	AWWA C110

* FURNISHED BY UTILITY AGENCY

FIRE HYDRANT WITH VALVE

RELEASE FOR CONSTRUCTION

NO.	DATE	DESCRIPTION

MURRAY CITY CORPORATION
DEPARTMENT OF PUBLIC SERVICES -- ENGINEERING DIVISION
4646 SOUTH 500 WEST, MURRAY UT, 84123 - (801) 270-2400

DESIGN JCD 7/03 | CHECK BSS 7/03 | QA AUDIT
DRAWN BCH 7/03 | CHECK BCH 7/03 | DATE
QUANT. | CHECK | BY

APPROVAL RECOMM. ____ DATE ____ DESIGN ENGINEER
APPROVED ____ DATE ____ PROJECT MANAGER

COTTONWOOD STREET
5600 SOUTH TO VINE STREET
APWA DETAIL 511

PROJECT NUMBER *HPP-STP-2148(110

SALT LAKE COUNTY

SHEET NO. DT-05

DIRECT BEARING THRUST BLOCK

NOTES:

1. CONCRETE: CLASS C(AE) MINIMUM PER SECTION 03055. POUR CONCRETE AGAINST UNDISTURBED SOIL.
2. PIPE JOINTS: DO NOT COVER WITH CONCRETE. LEAVE COMPLETELY ACCESSIBLE.
3. GREASE: APPLY POLY-FM GREASE TO ALL BURED METAL SURFACES. WRAP WITH 8 MIL THICK POLYETHYLENE SHEET AND TAPE WRAP.
4. SPECIAL CONSTRUCTION REQUIREMENTS:
   - A. THRUST DESIGN FOR PIPE SIZES OR CONFIGURATIONS NOT SHOWN REQUIRE SPECIAL DESIGN.
   - B. BEARING AREAS, VOLUMES, AND SPECIAL THRUST BLOCKING DETAILS SHOWN ON DRAWINGS TAKE PRECEDENCE OVER THIS PLAN.
   - C. REINFORCING STEEL BARS TO BE EPOXY COATED AT LEAST 15 MILS THICK. MINIMUM STRESS YIELD STRENGTH OF TIE DOWN BARS IS 70,000 PSI.
   - D. LOCKING RESTRAINT DEVICES MAY BE USED IN CONJUNCTION WITH CONCRETE THRUST BLOCKING (AT OPTION OF ENGINEER).
5. INSPECTION: PRIOR TO BACKFILLING AROUND THRUST BLOCK, SECURE INSPECTION INSTALLATION BY ENGINEER.
6. BACKFILL: PROVIDE AND PLACE PER SECTION 02317. COMPACT PER SECTION 02324.

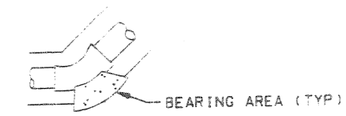

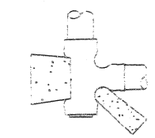

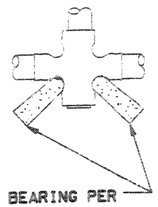

THE AREA OF BEARING PER THRUST BLOCK TO EQUAL ½THE AREA SPECIFIED FOR THE LARGEST PIPE OR FITTING SIZE.

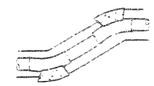

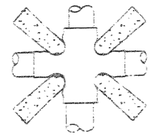

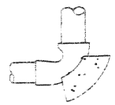

MINIMUM BEARING AREA IN SQUARE FEET					
SIZE OF PIPE	TEE, VALVES, DEAD ENDS	90° BEND	45° BEND	22 1/2° BEND	11 1/4° BEND
4"	2.0	3.0	2.0	2.0	2.0
6"	4.0	5.5	3.0	1.5	1.0
8"	6.5	9.5	5.0	2.75	1.5
12"	14.0	20.0	11.0	5.5	3.0
14"	19.0	26.5	14.5	7.5	4.0
16"	24.0	34.0	18.5	9.5	6.0
20"	27.0	52.0	28.5	14.5	16.0
30"	81.0	114.0	62.0	32.0	16.0

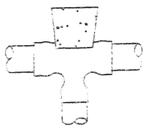

DIRECT BEARING THRUST BLOCK

RELEASE FOR CONSTRUCTION

NO.	DATE	DESCRIPTION

MURRAY CITY CORPORATION
DEPARTMENT OF PUBLIC SERVICES — ENGINEERING DIVISION
4646 SOUTH 500 WEST, MURRAY UTAH 84123 - (801) 270-2400

DESIGN JCD 7/03 | CHECK BSS 7/03 | QA AUDIT
DRAWN BCH 7/03 | CHECK BCH 7/03 | DATE
QUANT. | CHECK | BY

APPROVAL RECOMM. DATE — DESIGN ENGINEER
APPROVED DATE — PROJECT MANAGER

COTTONWOOD STREET
5600 SOUTH TO VINE STREET
APWA DETAIL 561

PROJECT NUMBER *HPP-STP-2148(110)

SALT LAKE COUNTY

SHEET NO. DT-10

$DATE$ $TIME$

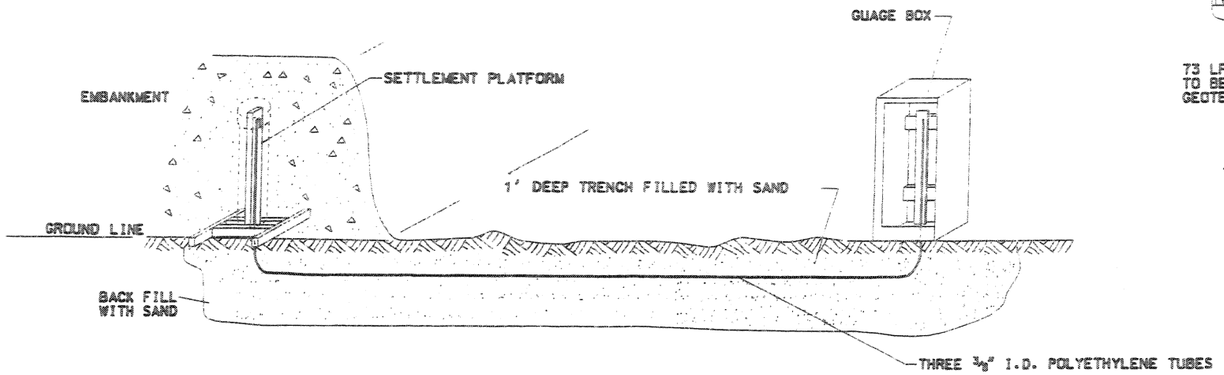

SETTLEMENT INSTALLATION DETAIL

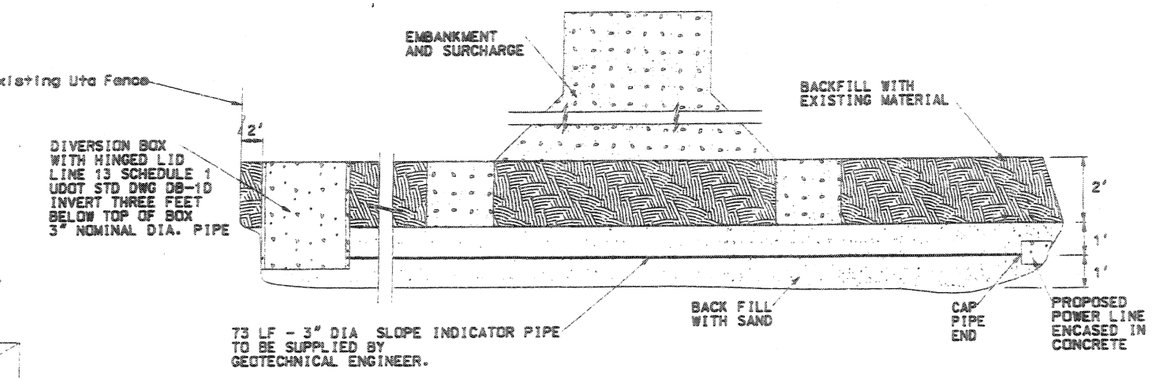

HORIZONTAL INCLINOMETER INSTALLATION DETAIL

NOTE:

1. BOXES TO BE CONSTRUCTED OF 16 GAUGE SHEET METAL WITH DOOR HINGED ADEQUATELY TO PREVENT WARPING.
2. PROVIDE WEATHER-PROOF BOXES.
3. SETTLEMENT PLATFORM FLUID TO BE 50% WATER & 50% ETHYLENE GLYCOL
4. CONSTRUCTION OF HORIZONTAL INCLINOMETER AND SETTLEMENT PLATFORMS TO BE PER GEOTECHNICAL ENGINEERS FIELD RECOMMENDATIONS. CONTACT GEOTECHICAL ENGINEER (TERRACON, RICK CHESTNUT 545-8500) 48 HOURS PRIOR TO PLACEMENT.
5. PROVIDE THREE 3/8" I.D. POLYETHYLENE TUBES. ONE MANOMETER, ONE VENT AND ONE SPARE MANOMETER.

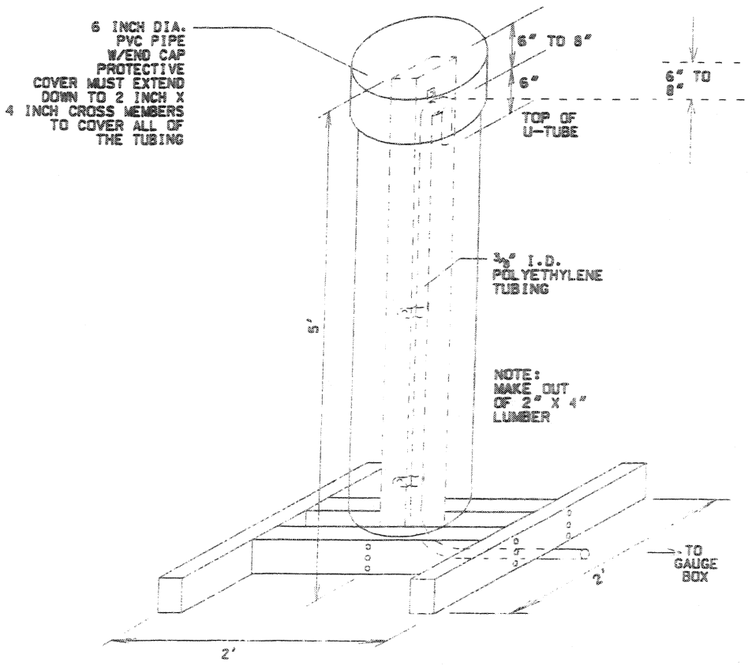

SETTLEMENT PLATFORM DETAIL

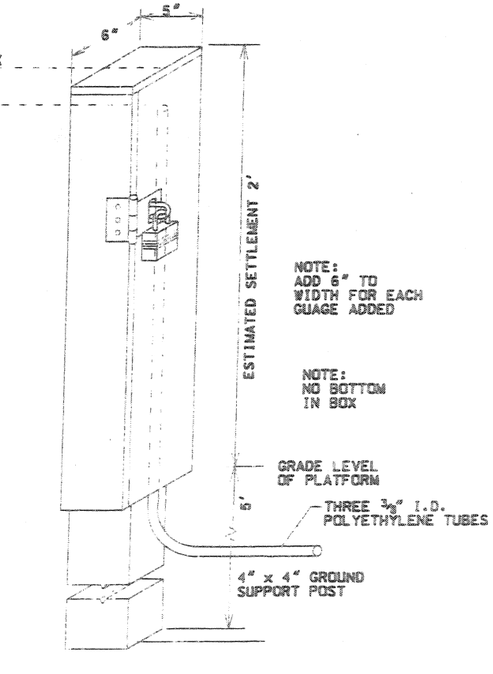

SINGLE SETTLEMENT GAUGE BOX DETAIL

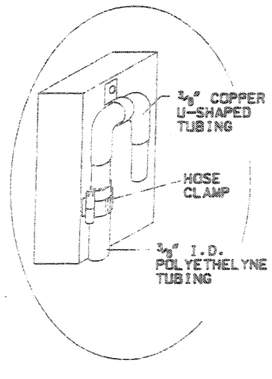

TUBING END MOUNTING DETAIL

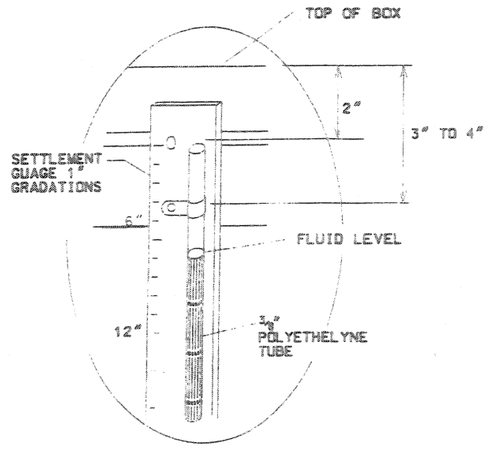

SETTLEMENT GAUGE DETAIL

RELEASE FOR CONSTRUCTION

NO.	DATE	DESCRIPTION

MURRAY CITY CORPORATION
DEPARTMENT OF PUBLIC SERVICES -- ENGINEERING DIVISION
4646 SOUTH 500 WEST, MURRAY UT, 84123 - (801) 270-2400

DESIGN ERS 10-03	CHECK DTP 10-03	QA AUDIT	
DRAWN ERS 10-03	CHECK DTP 10-03	DATE	
QUANT. ERS 10-03	CHECK DTP 10-03	BY	

APPROVAL RECOMM. — DESIGN ENGINEER — DATE
APPROVED — PROJECT MANAGER — DATE

COTTONWOOD STREET
5600 SOUTH TO VINE STREET
SETTLEMENT PLATFORM

PROJECT NUMBER *HPP-STP-2148(1)0

SALT LAKE COUNTY

SHEET NO. 10 OF 11 SHEETS

6DATE6 6TIME6 6FILE6

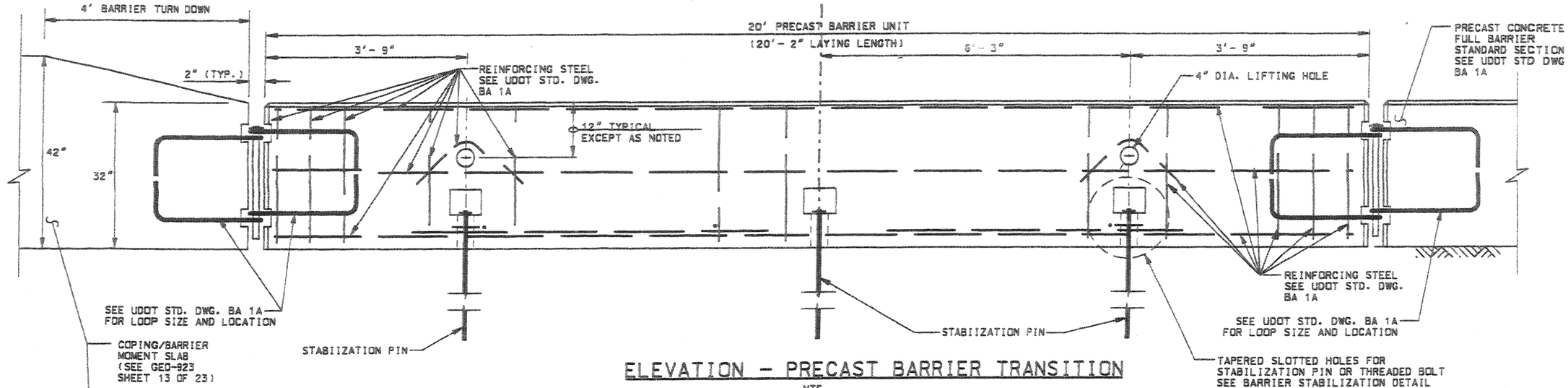

ELEVATION - PRECAST BARRIER TRANSITION

NTS

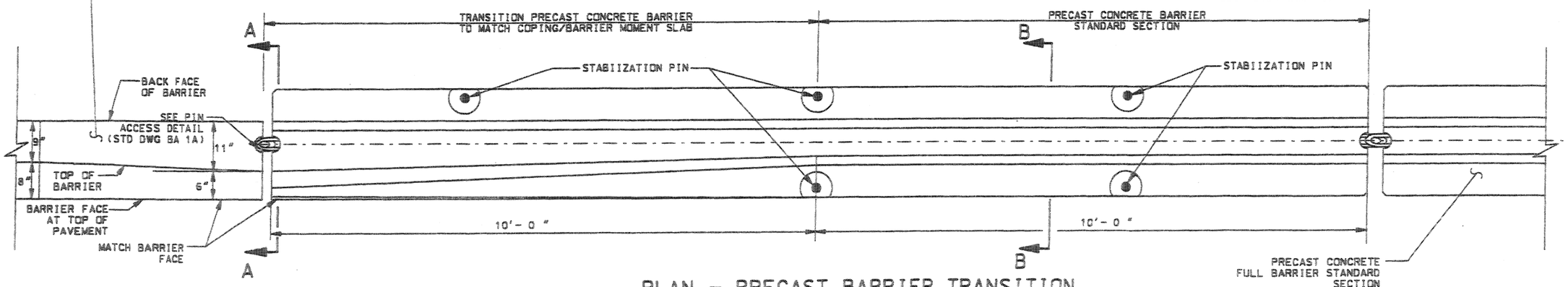

PLAN - PRECAST BARRIER TRANSITION

NTS

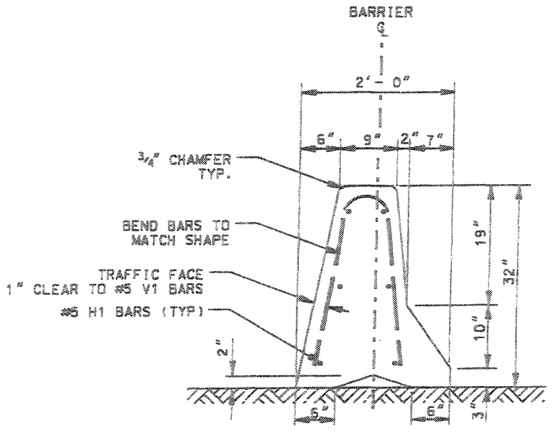

SECTION A-A

NTS

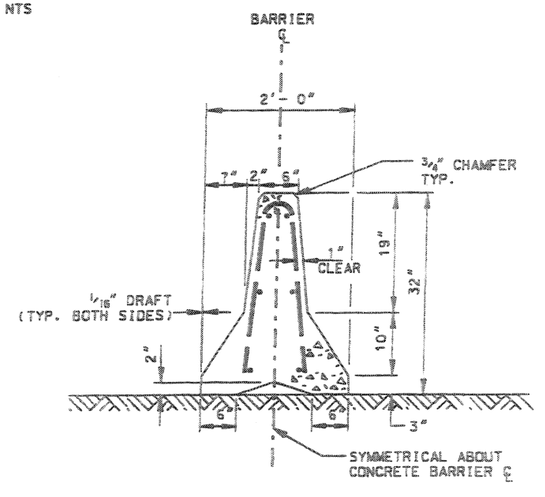

SECTION B-B

NTS

NOTES:

1. SEE UDOT STANDARD DRAWING BA 1A FOR REINFORCING STEEL, CONNECTION, AND PIN DETAILS.
2. USE A 4 INCH WHITE PVC SLEEVE TO FORM THE LIFTING HOLES. LEAVE SLEEVE IN PLACE AFTER CASTING.
3. USE CLASS AA(AE) CONCRETE.
4. DO NOT PUT SCUPPERS IN PRECAST BARRIER.

RELEASE FOR CONSTRUCTION

NO.	DATE	DESCRIPTION

MURRAY CITY CORPORATION
DEPARTMENT OF PUBLIC SERVICES — ENGINEERING DIVISION
4646 SOUTH 500 WEST, MURRAY UT, 84123 - (801) 270-2400

DESIGN ES 8/03 | CHECK DTP 10/03 | QA AUDIT
DRAWN ES 8/03 | CHECK DTP 10/03 | DATE
QUANT. ES 8/03 | CHECK DTP 10/03 | BY

DESIGN ENGINEER — DATE
APPROVED — PROJECT MANAGER — DATE
APPROVAL RECOMM.

COTTONWOOD STREET
5600 SOUTH TO VINE STREET
PRECAST BARRIER TRANSITION

PROJECT NUMBER **#IPP-STP-2148(110**

SALT LAKE COUNTY

SHEET NO. ST-12

@DATE@ @TIME@ @FILE@

SECTION A-A
NTS

STA. 30+00.00
END TYPICAL SECTION NO. 2
BEGIN TYPICAL SECTION NO. 3
BEGIN TAPER 20.00 RT

PT
Sta 30+21.34

STA. 31+50.00
CROWN LINE = PGL
ELEV = 4323.36
BEGIN CROWN LINE TRANSITION
END PGL = TOP OF HMA

STA. 33+00.00 6.00 RT
END CROWN LINE TRANSITION
CROWN LINE ELEV = 4331.22

STA. 33+20.00
END TYPICAL SECTION NO. 3
BEGIN TYPICAL SECTION NO. 4

STA. 33+20.00 28.00 RT
END TAPER

STA. 33+81.37
END TYPICAL SECTION NO. 4
BEGIN TYPICAL SECTION NO. 5
BEGIN SUPERELEVATION TRANSITION
CROWN LINE = AXIS OF ROTATION (6.00 RT)
CROWN LINE ELEV = 4336.06

STA. 35+05.37
END SUPERELEVATION TRANSITION
END CROWN LINE (16.00 RT)
CROWN LINE ELEV = 4343.39
PGL ELEV. = 4343.51
BEGIN PGL = TOP OF HMA

NOTES:

1. ELEVATIONS ARE AT TOP OF HMA
2. TAPER CALLOUTS ARE TO TRAFFIC FACE OF BARRIER

RELEASE FOR CONSTRUCTION

NO.	DATE	DESCRIPTION

MURRAY CITY CORPORATION
DEPARTMENT OF PUBLIC SERVICES -- ENGINEERING DIVISION
4646 SOUTH 500 WEST, MURRAY UT. 84123 -- (801) 270-2400

DESIGN DTP 8/03	CHECK	QA AUDIT 8/03	CHECK
DRAWN BCN 8/03	CHECK		CHECK
QUANT.	CHECK		BY

APPROVAL RECOMM. — DESIGN ENGINEER — DATE
APPROVED — PROJECT MANAGER — DATE

COTTONWOOD STREET
5600 SOUTH TO VINE STREET
CROWN LINE TRANSITION

PROJECT NUMBER *HPP-STP-2148(1)0

SALT LAKE COUNTY

SHEET NO. 21 OF 33 SHEETS

QUANTITIES

ITEM	QTY.	UNIT
MODULAR BLOCK WALL (MOD-923-1) (EST. QTY. 170 SQ. FT.)	1	LUMP

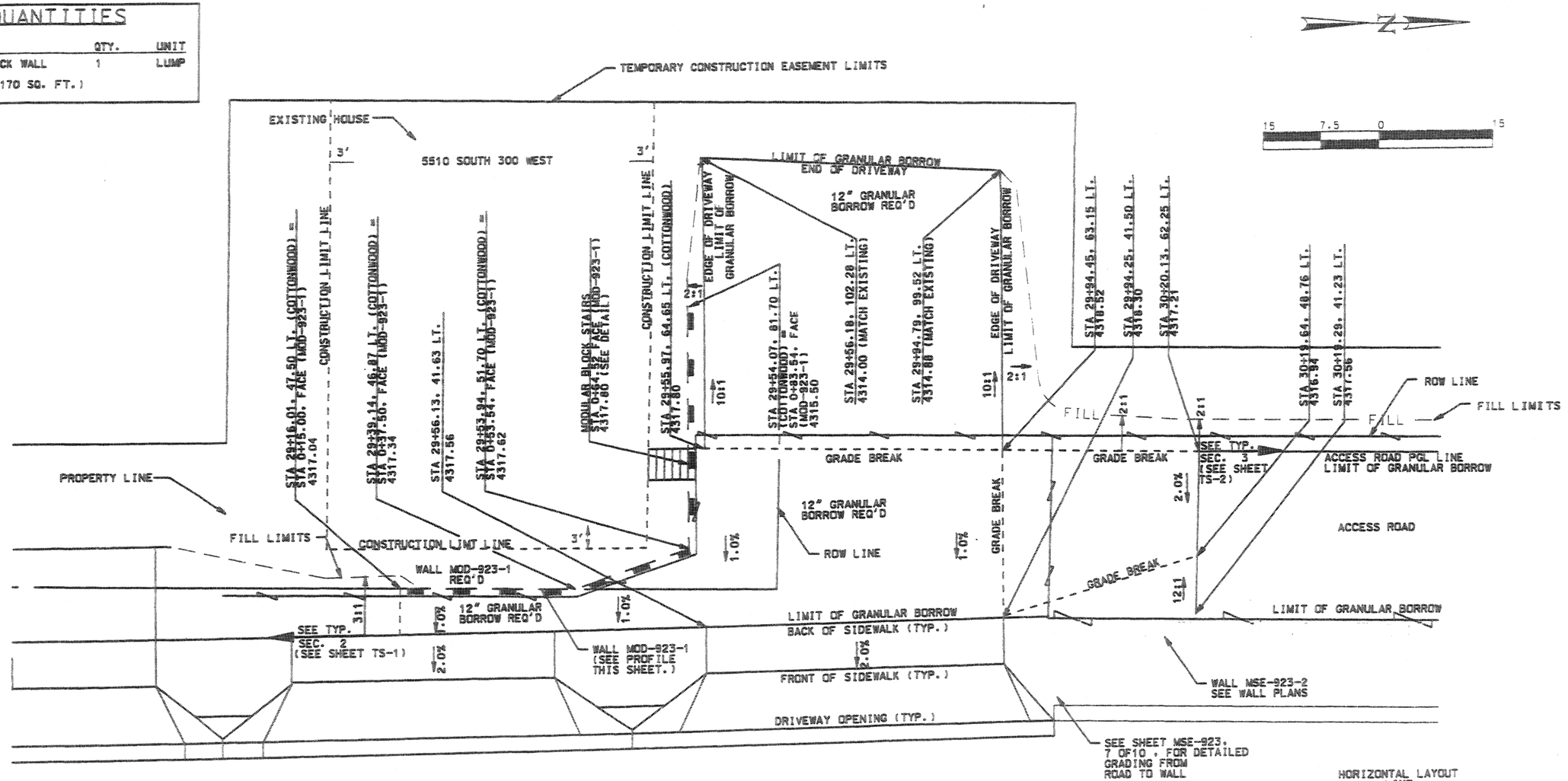

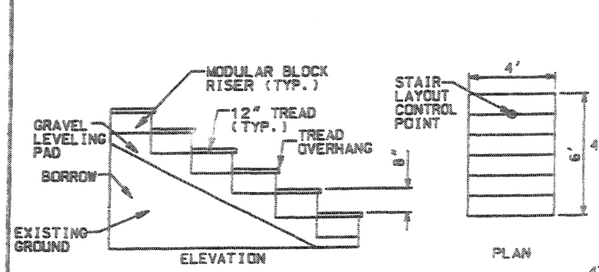

MODULAR BLOCK STAIR DETAIL

NTS

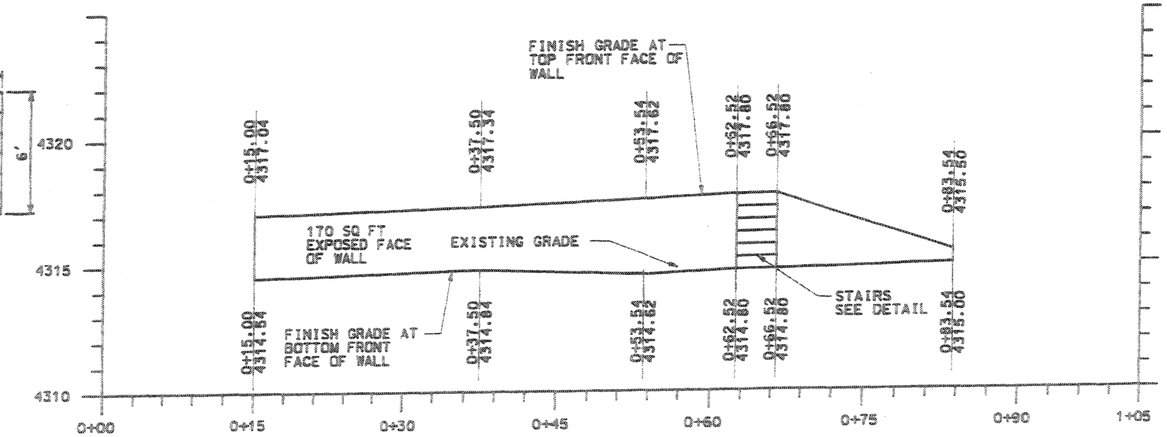

MOD-923-1 WALL PROFILE

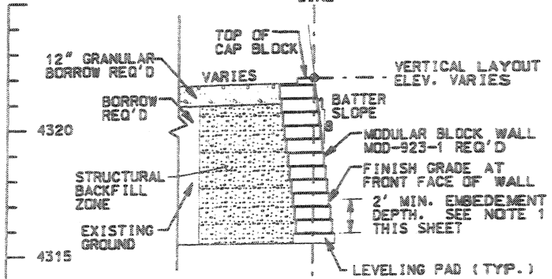

WALL MOD-923-1 TYPICAL SECTION

NTS

RELEASE FOR CONSTRUCTION

NO.	DATE	DESCRIPTION

MURRAY CITY CORPORATION
DEPARTMENT OF PUBLIC SERVICES -- ENGINEERING DIVISION
4646 SOUTH 500 WEST, MURRAY UT, 84123 - (801) 270-2400

APPROVAL RECOMM.	DATE	DESIGN ENGINEER	DATE	APPROVED	DATE	PROJECT MANAGER	DATE

DESIGN ERS 9/03	CHECK DTP 9/03	QA AUDIT
DRAWN ERS 9/03	CHECK DTP 9/03	DATE
QUANT. ERS 9/03	CHECK DTP 9/03	BY

COTTONWOOD STREET
5600 SOUTH TO VINE STREET
UTA ACCESS GRADING PLAN

PROJECT NUMBER *HPP-STP-2148(1)0

SALT LAKE COUNTY

SHEET NO. 05 OF 14

$DATE$ $TIME$

FILES

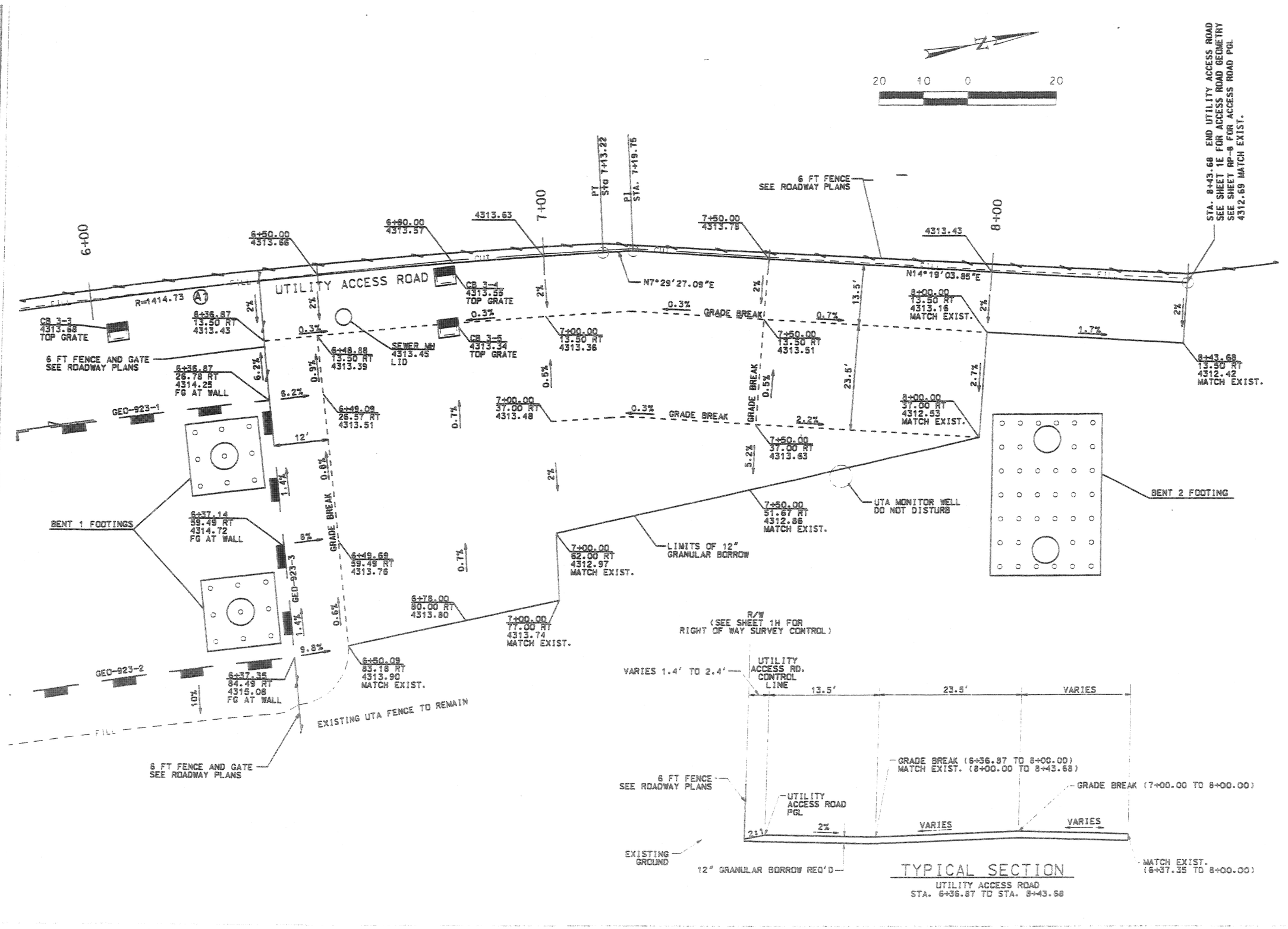

TYPICAL SECTION

UTILITY ACCESS ROAD
STA. 6+36.87 TO STA. 8+43.68

RELEASE FOR CONSTRUCTION

NO.	DATE	DESCRIPTION

MURRAY CITY CORPORATION
DEPARTMENT OF PUBLIC SERVICES -- ENGINEERING DIVISION
4646 SOUTH 500 WEST, MURRAY UT. 84123 - (801) 270-2400

DESIGN	DJP	9/03	QA AUDIT	
DRAWN	DJP	9/03	CHECK ES 9/03	DATE
QUANT	ES	9/03	CHECK ES 9/03	DATE
			CHECK DJP 9/03	BY

DESIGN ENGINEER DATE
PROJECT MANAGER DATE
APPROVAL RECOMM. DATE
APPROVED DATE

COTTONWOOD STREET
5600 SOUTH TO VINE STREET
ACCESS RD. GRADING PLAN

PROJECT NUMBER #HPP-STP-2148(1)0

SALT LAKE COUNTY

SHEET NO. 1F

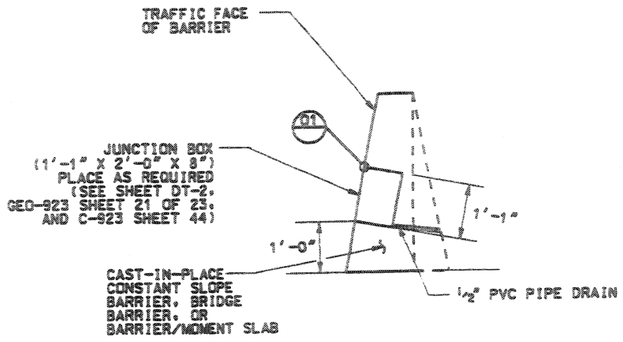

BARRIER CROSS SECTION
NTS

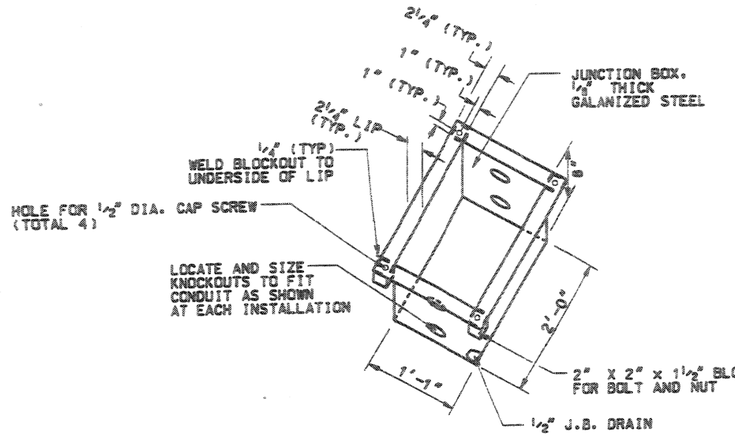

ISOMETRIC
NTS

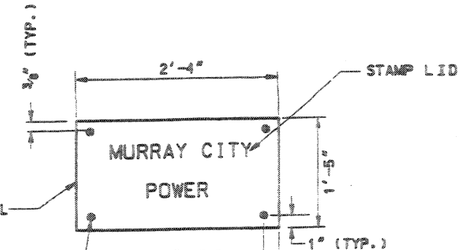

LID PLAN
NTS

LID SIDE VIEW
NTS

NOTES:

1. ALL CORNER JOINTS TO BE LAPPED AND SECURED BY SPOT WELDING, SEAM WELDING, OR RIVETING. HOT DIP GALVANIZE BOX AFTER WELDING.
2. NO PORTION OF THE BOX, COVER, OR FASTENERS SHALL PROTRUDE BEYOND THE FACE OF THE BARRIER.
3. PROVIDE GROUND STUD IN BOX.
4. ADJUST REINFORCING IN BARRIER AS REQUIRED TO INSTALL JUNCTION BOX. NO REINFORCING STEEL SHALL BE CUT TO PLACE JUNCTION BOX.

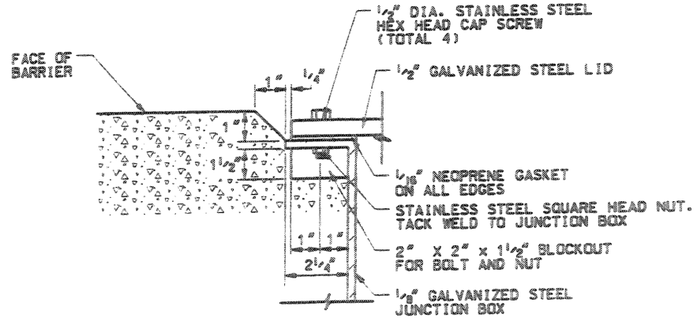

JUNCTION BOX/BARRIER DETAIL 01
NTS

RELEASE FOR CONSTRUCTION

NO.	DATE	DESCRIPTION

MURRAY CITY CORPORATION
DEPARTMENT OF PUBLIC SERVICES -- ENGINEERING DIVISION
4646 SOUTH 500 WEST, MURRAY UT. 84123 - (801) 270-2400

DESIGN	ES	10/03	CHECK	DTP	10/03
DRAWN	ES	10/03	CHECK	DTP	10/03
QUANT.			CHECK		

QA AUDIT — DATE — BY

APPROVED — DATE — PROJECT MANAGER
APPROVAL RECOMM. — DATE — DESIGN ENGINEER

COTTONWOOD STREET
5600 SOUTH TO VINE STREET
JUNCTION BOX DETAIL

PROJECT NUMBER *HPP-STP-2148(110

SALT LAKE COUNTY

SHEET NO. DT-16

$TIME$ $DATE$ $FILE$

PAVEMENT MARKING PAINT SUMMARY SHEET

					4" WHITE				4" YELLOW								8" WHITE				8" YELLOW		30" YELLOW		PAVEMENT MESSAGE	PAVEMENT MARKING PAINT 12" STOP BARS, CROSS WALKS
					270 FT/GAL		1080 FT/GAL		270 FT/GAL		1080 FT/GAL		135 FT/GAL		540 FT/GAL		135 FT/GAL		540 FT/GAL		135 FT/GAL		36 FT/GAL			
					SOLID		SKIP		SOLID		SKIP		DOUBLE SOLID		DOUBLE SKIP		SOLID		DASHED		SOLID		SOLID			
	STATION	OFFSET	STATION	OFFSET	FEET	GALLON	FEET	GALLON	FEET	GALLON	FEET	GALLON	FEET	GALLON	FEET	GALLON	FEET	GALLON	FEET	GALLON	FEET	GALLON	FEET	GALLON	EACH	FEET
COTTONWOOD	25+14.00	0.00 RT	26+04.00	6.00 LT		0.00		0.00		0.00		0.00	90.00	0.67		0.00		0.00		0.00		0.00		0.00		
COTTONWOOD	25+14.00	0.00 RT	26+04.00	6.00 RT		0.00		0.00		0.00		0.00	90.00	0.67		0.00		0.00		0.00		0.00		0.00		
COTTONWOOD	25+14.00	12.00 LT	26+04.00	18.00 LT	90.00	0.33		0.00		0.00		0.00		0.00		0.00		0.00		0.00		0.00		0.00		
COTTONWOOD	25+14.00	12.00 RT	26+04.00	18.00 RT	90.00	0.33		0.00		0.00		0.00		0.00		0.00		0.00		0.00		0.00		0.00		
COTTONWOOD	26+04.00	18.00 LT	30+00.00	18.00 LT	396.00	1.47		0.00		0.00		0.00		0.00		0.00		0.00		0.00		0.00		0.00		
COTTONWOOD	26+04.00	18.00 RT	30+00.00	18.00 RT	396.00	1.47		0.00		0.00		0.00		0.00		0.00		0.00		0.00		0.00		0.00		
COTTONWOOD	26+04.00	6.00 LT	30+00.00	6.00 LT		0.00		0.00	396.00	1.47	396.00	0.37		0.00		0.00		0.00		0.00		0.00		0.00		
COTTONWOOD	26+04.00	6.00 RT	30+00.00	6.00 RT		0.00		0.00	396.00	1.47	396.00	0.37		0.00		0.00		0.00		0.00		0.00		0.00		
COTTONWOOD	30+00.00	18.00 LT	33+00.00	6.00 LT	300.00	1.11		0.00		0.00		0.00		0.00		0.00		0.00		0.00		0.00		0.00		
COTTONWOOD	30+00.00	6.00 LT	33+00.00	6.00 RT		0.00		0.00		0.00		0.00	300.00	2.22		0.00		0.00		0.00		0.00		0.00		
COTTONWOOD	30+00.00	6.00 RT	33+00.00	6.00 RT		0.00		0.00		0.00		0.00	300.00	2.22		0.00		0.00		0.00		0.00		0.00		
COTTONWOOD	30+00.00	18.00 RT	33+00.00	18.00 RT	300.00	1.11		0.00		0.00		0.00		0.00		0.00		0.00		0.00		0.00		0.00		
COTTONWOOD	33+00.00	6.00 LT	46+25.00	6.00 LT	1325.00	4.91		0.00		0.00		0.00		0.00		0.00		0.00		0.00		0.00		0.00		
COTTONWOOD	33+00.00	6.00 RT	46+25.00	6.00 RT		0.00		0.00		0.00		0.00	1325.00	9.81		0.00		0.00		0.00		0.00		0.00		
COTTONWOOD	33+00.00	18.00 RT	46+25.00	18.00 RT	1325.00	4.91		0.00		0.00		0.00		0.00		0.00		0.00		0.00		0.00		0.00		
COTTONWOOD	46+25.00	6.00 LT	49+85.00	30.00 LT	360.00	1.33		0.00		0.00		0.00		0.00		0.00		0.00		0.00		0.00		0.00		
COTTONWOOD	49+85.00	30.00 LT	50+15.00	31.00 LT	30.00	0.11		0.00		0.00		0.00		0.00		0.00		0.00		0.00		0.00		0.00		
COTTONWOOD	46+25.00	6.00 RT	50+15.00	7.00 LT		0.00		0.00		0.00		0.00	390.00	2.89		0.00		0.00		0.00		0.00		0.00		
COTTONWOOD	46+25.00	6.00 RT	46+55.00	7.00 RT		0.00		0.00		0.00		0.00	30.00	0.22		0.00		0.00		0.00		0.00		0.00		
COTTONWOOD	46+55.00	7.00 RT	50+15.00	7.00 RT		0.00		0.00		0.00		0.00	360.00	2.67		0.00		0.00		0.00		0.00		0.00		
COTTONWOOD	46+25.00	18.00 RT	46+55.00	19.00 RT	30.00	0.11		0.00		0.00		0.00		0.00		0.00		0.00		0.00		0.00		0.00		
COTTONWOOD	46+55.00	19.00 RT	48+35.00	19.00 RT	180.00	0.67		0.00		0.00		0.00		0.00		0.00		0.00		0.00		0.00		0.00		
COTTONWOOD	48+35.00	19.00 RT	50+15.00	31.00 RT	180.00	0.67		0.00		0.00		0.00		0.00		0.00		0.00		0.00		0.00		0.00		
COTTONWOOD	50+15.00	19.00 LT	52+24.93	19.00 LT		0.00	209.93	0.19		0.00		0.00		0.00		0.00		0.00		0.00		0.00		0.00		
COTTONWOOD	50+15.00	7.00 LT	52+24.93	7.00 LT		0.00		0.00	209.93	0.78	209.93	0.19		0.00		0.00		0.00		0.00		0.00		0.00		
COTTONWOOD	50+15.00	7.00 RT	52+24.93	7.00 RT		0.00		0.00	209.93	0.78	209.93	0.19		0.00		0.00		0.00		0.00		0.00		0.00		
COTTONWOOD	50+15.00	19.00 RT	52+24.93	19.00 RT		0.00	209.93	0.19		0.00		0.00		0.00		0.00		0.00		0.00		0.00		0.00		
COTTONWOOD	88+05.48	10.33 RT	89+54.53	10.33 RT		0.00		0.00		0.00		0.00		0.00		0.00	149.05	1.10		0.00		0.00		0.00		
COTTONWOOD	88+05.48	21.33 RT	89+54.83	21.33 RT		0.00		0.00		0.00		0.00		0.00		0.00	149.35	1.11		0.00		0.00		0.00		
COTTONWOOD	86+59.20	7.28 RT	87+15.14	7.28 RT		0.00		0.00		0.00		0.00		0.00		0.00		0.00		0.00		0.00	55.94	1.55		
COTTONWOOD	87+15.14	7.28 RT	87+43.96	1.44 LT		0.00		0.00		0.00		0.00		0.00		0.00		0.00		0.00		0.00	28.82	0.80		
COTTONWOOD	87+43.96	1.44 LT	88+54.21	1.44 LT		0.00		0.00		0.00		0.00		0.00		0.00		0.00		0.00		0.00	210.25	5.84		
COTTONWOOD	89+54.21	0.19 LT	89+55.15	33.00 RT		0.00		0.00		0.00		0.00		0.00		0.00		0.00		0.00		0.00		0.00		33.19
COTTONWOOD	86+05.48		89+55.15			0.00		0.00		0.00		0.00		0.00		0.00		0.00		0.00		0.00		0.00	7.00	
COTTONWOOD	124+31.81	6.62 LT	124+37.81	6.62 LT		0.00		0.00		0.00		0.00		0.00		0.00		0.00		0.00		0.00	6.00	0.17		
COTTONWOOD	124+37.81	7.07 LT	126+91.70	7.24 LT		0.00		0.00	253.89	0.94		0.00		0.00		0.00		0.00		0.00		0.00		0.00		
COTTONWOOD	126+91.70	6.79 LT	126+97.70	6.79 LT		0.00		0.00		0.00		0.00		0.00		0.00		0.00		0.00		0.00	6.00	0.17		
COTTONWOOD	124+31.81	5.76 RT	124+37.81	5.76 RT		0.00		0.00		0.00		0.00		0.00		0.00		0.00		0.00		0.00	6.00	0.17		
COTTONWOOD	124+37.81	6.24 RT	126+91.68	6.16 RT		0.00		0.00	253.97	0.94		0.00		0.00		0.00		0.00		0.00		0.00		0.00		
COTTONWOOD	126+91.68	5.71 RT	126+97.68	5.71 RT		0.00		0.00		0.00		0.00		0.00		0.00		0.00		0.00		0.00	6.00	0.17		
TOTAL					5002.00	18.53	419.86	0.39	1719.72	6.37	1211.56	1.12	2885.00	21.37	0.00	0.00	298.40	2.21	0.00	0.00	0.00	0.00	319.01	8.86	7.00	34.00

RELEASE FOR CONSTRUCTION

NO.	DATE	DESCRIPTION

MURRAY CITY CORPORATION
DEPARTMENT OF PUBLIC SERVICES -- ENGINEERING DIVISION
4646 SOUTH 500 WEST, MURRAY UT. 84123 - (801) 270-2400

DESIGN CP 10/03 CHECK DTP 10/03
DRAWN BN 10/03 CHECK DTP 10/03
QUANT. ES 10/03 CHECK DTP 10/03
QA AUDIT DATE BY

APPROVAL RECOMM. DESIGN ENGINEER DATE
APPROVED PROJECT MANAGER DATE

COTTONWOOD STREET
5600 SOUTH TO VINE STREET
SUMMARY SHEET

PROJECT NUMBER ※HPP-STP-2148(1)0

SALT LAKE COUNTY

SHEET NO. SM-1

PAVEMENT MARKING REMOVAL

LINE	FROM		TO		REMOVE PAVEMENT MESSAGE	REMOVE PAVEMENT MARKINGS	REMARKS
	STATION	OFFSET	STATION	OFFSET	EACH	FEET	
COTTONWOOD	88+05.48		89+55.15		4		
COTTONWOOD	88+80.46	9.33 RT	89+58.35	9.22 RT		77.89	
COTTONWOOD	88+80.60	21.22 RT	89+58.33	21.08 RT		77.73	
COTTONWOOD	89+58.36	0.45 LT	89+58.31	33.76 RT		34.21	
TOTAL					4	189.83	

RELEASE FOR CONSTRUCTION

NO.	DATE	DESCRIPTION

MURRAY CITY CORPORATION
DEPARTMENT OF PUBLIC SERVICES -- ENGINEERING DIVISION
4646 SOUTH 500 WEST, MURRAY UTAH 84123 - (801) 270-2400

DESIGN CP 10/03 | CHECK DTP 10/03 | QA AUDIT
DRAWN BN 10/03 | CHECK DTP 10/03 | DATE
QUANT. ES 10/03 | CHECK DTP 10/03 | BY

APPROVAL RECOMMD. _____ DATE _____ DESIGN ENGINEER
APPROVED _____ DATE _____ PROJECT MANAGER

COTTONWOOD STREET
5600 SOUTH TO VINE STREET
SUMMARY SHEET

SALT LAKE COUNTY

PROJECT NUMBER *HPP-STP-2148(110

@FILE@ @DATE@ @TIME@

SIGN SCHEDULE

SIGN BASE AND FACE MATERIAL — TYPE A-1 / TYPE A-2 (EA)

SIGN #	LINE	STATION	OFFSET	SIGN DESCRIPTION	SIGN CODE	A-1 12 X 18	A-1 21 X 15	A-1 24	A-1 24 X 12	A-1 24 X 18	A-1 24 X 30	A-1 30 X 24	A-1 30 X 30	A-1 36 X 36	A-1 48 X 24	A-2 12 X 18	A-2 21 X 15	A-2 24	A-2 24 X 12	A-2 24 X 18	A-2 24 X 30	A-2 30 X 24	A-2 30 X 30	A-2 36 X 36	A-2 48 X 48
						EA	EA	EA	EA	EA	EA	EA	EA	EA	EA	EA	EA	EA	EA	EA	EA	EA	EA	EA	EA
	COTTONWOOD	27+00.00	23.00 RT	SPEED LIMIT	N						1														
	COTTONWOOD	30+05.00	43.50 LT	BIKE ROUTE	N															1					
	COTTONWOOD	30+05.00	43.50 RT	BIKE ROUTE	AUX																				
	COTTONWOOD	50+50.00	45.00 LT	SPEED LIMIT	N						1														
	COTTONWOOD	50+20.00	45.00 LT	LANE DROP	N									1											
	COTTONWOOD	55+00.00	48.00 LT	BIKE ROUTE	N															1					
	COTTONWOOD	55+00.00	48.00 LT	BIKE ROUTE	AUX																				
	COTTONWOOD	55+00.00	39.50 RT	SIDEWALK ENDS	N										1										
	5300 SOUTH	125+63.00	51.00 LT																						
	5300 SOUTH	125+67.00	51.00 RT																						
	COTTONWOOD	86+59.20	7.28 RT																						
	COTTONWOOD	89+54.21	1.44 LT																						
TOTAL						0	0	0	0	0	2	0	0	1	1	0	0	0	0	2	0	0	0	0	0

SIGN BASE AND FACE MATERIAL — TYPE P-1 / TYPE P-2 (EA)

LINE / STATION	P-1 12 X 18	P-1 21 X 15	P-1 24	P-1 24 X 12	P-1 24 X 18	P-1 24 X 30	P-1 30 X 24	P-1 30 X 30	P-1 36 X 36	P-1 48 X 48	P-2 12 X 18	P-2 21 X 15	P-2 24	P-2 24 X 12	P-2 24 X 18	P-2 24 X 30	P-2 30 X 24	P-2 30 X 30	P-2 36 X 36	P-2 48 X 48
	EA	EA	EA	EA	EA	EA	EA	EA	EA	EA	EA	EA	EA	EA	EA	EA	EA	EA	EA	EA
COTTONWOOD 27+00.00																				
COTTONWOOD 30+05.00 (LT)																				
COTTONWOOD 30+05.00 (RT)																				
COTTONWOOD 50+50.00																				
COTTONWOOD 50+20.00																				
COTTONWOOD 55+00.00 (N)																				
COTTONWOOD 55+00.00 (AUX)																				
COTTONWOOD 55+00.00 (39.50 RT)																				
5300 SOUTH 125+63.00																				
5300 SOUTH 125+67.00																				
COTTONWOOD 86+59.20																				
COTTONWOOD 89+54.21																				
TOTAL	0	0	0	0	0	0	0	0	0	0	0	0	0	0	0	0	0	0	0	0

SIGN TYPE / AUXILIARY / SIGN POST

LINE / STATION	SIGN TYPE A-1	SIGN TYPE P-1	AUXILIARY A-1	AUXILIARY A-2	AUXILIARY P-1	AUXILIARY P-2	SIGN COLOR	TIMBER	TUB STEEL	SQ STEEL	S/B TUB STEEL	Post Dimension	FOUNDATION	RELOCATE	REMOVE
	SQ FT	SQ FT	SQ FT	SQ FT	SQ FT	SQ FT		EA	EA	EA	EA		EA	EA	EA
COTTONWOOD 27+00.00							W	1				4" x 4"			
COTTONWOOD 30+05.00 (LT)							G	1				4" x 4"			
COTTONWOOD 30+05.00 (RT)				3.00			G								
COTTONWOOD 50+50.00							W	1				4" x 4"			
COTTONWOOD 50+20.00							Y	1				4" x 6"			
COTTONWOOD 55+00.00 (N)							G	1				4" x 4"			
COTTONWOOD 55+00.00 (AUX)				3.00			G								
COTTONWOOD 55+00.00 (39.50 RT)							W	1				4" x 4"			
5300 SOUTH 125+63.00														1	
5300 SOUTH 125+67.00														1	
COTTONWOOD 86+59.20														1	
COTTONWOOD 89+54.21														1	
TOTAL	0	0	0	6	0	0	0	6	0	0	0	0	0	4	0

SIGNING KEY

SIGN COLOR	SIGN CODE
W = WHITE	R = RELOCATION
G = GREEN	N = NEW SIGN
BL = BLUE	AUX = AUXILIARY SIGN
BR = BROWN	
BK = BLACK	
Y = YELLOW	
R = RED	

$FILE$ $DATE$ $TIME$

RELEASE FOR CONSTRUCTION

NO.	DATE	DESCRIPTION

MURRAY CITY CORPORATION
DEPARTMENT OF PUBLIC SERVICES -- ENGINEERING DIVISION
4646 SOUTH 500 WEST, MURRAY UT, 84123 - (801) 270-2400

							QA AUDIT
DESIGN	CP	10/03	CHECK	DTP	10/03	DATE	
DRAWN	BH	10/03	CHECK	DTP	10/03	DATE	
QUANT.	ES	10/03	CHECK	DTP	10/03	BY	

APPROVAL RECOM. ____ DATE ____ DESIGN ENGINEER
APPROVED ____ DATE ____ PROJECT MANAGER

COTTONWOOD STREET
5600 SOUTH TO VINE STREET
SUMMARY SHEET

PROJECT NUMBER ✱HPP-STP-2148(1)0

SALT LAKE
COUNTY

SHEET NO. SM-2

REMOVAL SUMMARY SHEET

LINE	FROM		TO		Remove Concrete Median Planter	Remove Concrete Median	Remove Cleanout Box	Remove Railroad Track	Remove Concrete Curb	Remove Concrete Curb and Gutter	Remove Concrete Sidewalk	Remove Tree (Est. Qty. 18)	Abandon Pipe Culvert	Remove Pipe Culvert	Remove Diversion Box	Remove Fire Hydrant	Remove Manhole	Move Mailbox	Remove Fence	Remove Sign	Relocate Water Meter	Remove Bumper Post	Remove and Salvage Precast Concrete Barrier	REMARKS
	STATION	OFFSET	STATION	OFFSET	LUMP	LIN FEET	EACH	LIN FEET	LIN FEET	LIN FEET	SQ YD	LUMP	LIN FEET	LIN FEET	EACH	EACH	EACH	EACH	LIN FEET	EACH	EACH	EACH	EACH	
Cottonwood	86+59.29		87+08.95			50.00																		
Cottonwood	87+08.95		88+16.52		1																			
Cottonwood	88+16.52		89+57.85			141.00																		
Cottonwood	51+34.45	47.90 LT					1																	
Cottonwood	31+15.95	61.40 LT	35+83.75	1.29 RT				481.00																
Cottonwood	34+17.61	56.76 LT	35+94.66	4.13 LT				182.00																
Cottonwood	86+59.29		87+08.95						50.00															
Cottonwood	88+16.52		89+57.85						141.00															
5300 S	124+31.81	7.23 LT	126+97.69	7.49 LT					265.00															
5300 S	124+31.81	6.38 RT	126+97.69	6.25 RT					265.00															
5300 S	125+63.95	43.50 LT	125+73.87	43.54 LT						10.00														
5300 S	124+98.55	43.40 RT	125+08.62	43.49 RT						10.00														
Cottonwood	25+29.34	21.14 LT	25+29.34	40.50 LT							7.00													
5300 S	125+63.95	43.50 LT	125+73.87	43.54 LT							7.79													
5300 S	124+98.55	43.30 RT	125+08.62	44.49 RT							9.33													
Cottonwood	25+13.74	51.86 LT										1												
Cottonwood	25+97.81	47.40 LT										1												
Cottonwood	26+79.81	25.14 LT										1												
Cottonwood	27+36.71	52.04 LT										1												
Cottonwood	27+69.82	21.54 LT										1												
Cottonwood	27+85.82	21.74 LT										1												
Cottonwood	28+02.18	22.61 LT										1												
Cottonwood	28+26.37	21.53 LT										1												
Cottonwood	28+76.11	59.77 LT										1												
Cottonwood	28+76.95	64.81 LT										1												
Cottonwood	29+50.63	52.53 LT										1												
Cottonwood	43+39.54	16.20 RT										1												
Cottonwood	43+60.44	37.04 RT										1												
Cottonwood	44+93.89	48.32 LT										1												
Cottonwood	45+04.81	33.19 LT										1												
Cottonwood	45+22.69	8.93 LT										1												
Cottonwood	45+51.15	35.56 RT										1												
Cottonwood	87+63.60	2.88 RT											768.00											
Cottonwood	29+38.60	14.61 RT	37+01.96	25.75 RT									111.00											
Cottonwood	37+01.96	25.75 RT	38+02.61	20.40 LT									207.00											
Cottonwood	38+02.61	20.40 LT	40+07.48	43.26 LT									405.00											
Cottonwood	45+63.63	56.42 LT	49+53.47	102.35 LT									10.00											
Cottonwood	51+34.45	47.90 LT	51+43.50	47.88 LT									80.63											
Cottonwood	45+24.69	34.06 LT	45+84.23	63.79 LT									130.00											
Cottonwood	45+24.69	34.06 LT	46+02.36	69.99 RT										372.00										
Cottonwood	26+78.46	10.46 LT	30+50.20	5.78 LT										941.00										
Cottonwood	24+90.39	3.75 LT	34+30.88	10.36 RT										258.00										
Cottonwood	26+90.11	19.90 RT	29+46.35	22.96 RT										67.00										
Cottonwood	29+45.35	22.96 RT	30+12.07	24.41 RT										48.00										
Cottonwood	30+12.07	24.41 RT	30+51.94	5.74 LT										288.00										
Cottonwood	30+51.94	5.74 LT	33+39.33	7.48 RT										284.00										
Cottonwood	33+39.33	7.48 RT	36+22.93	14.32 RT										75.00										
Cottonwood	36+22.93	14.32 RT	36+42.00	56.98 LT										46.55										
Cottonwood	51+52.14	56.97 RT	51+99.93	58.49 RT																	1			
Cottonwood	41+23.33	0.93 RT													1									
Cottonwood	26+65.66	22.99 RT																						

RELEASE FOR CONSTRUCTION

NO.	DATE	DESCRIPTION

MURRAY CITY CORPORATION
DEPARTMENT OF PUBLIC SERVICES -- ENGINEERING DIVISION
4646 SOUTH 500 WEST, MURRAY UT, 84123 - (801) 270-2400

	DESIGN	CP	10/03	CHECK	DTP	10/03	QA AUDIT
	DRAWN	BR	10/03	CHECK	DTP	10/03	DATE
	QUANT.	ES	10/03	CHECK	DTP	10/03	BY

APPROVED _____ DATE _____ PROJECT MANAGER

APPROVAL RECOMMENDED _____ DATE _____ DESIGN ENGINEER

COTTONWOOD STREET
5600 SOUTH TO VINE STREET
SUMMARY SHEET

PROJECT NUMBER *HPP-STP-2148(110

SALT LAKE COUNTY

SHEET NO. 24 OF 24 SHEETS

$FILE$ $TIME$ $DATE$

REMOVAL SUMMARY SHEET

LINE	FROM		TO		Remove Concrete Median Planter	Remove Concrete Median	Remove Cleanout Box	Remove Railroad Track	Remove Concrete Curb	Remove Concrete Curb and Gutter	Remove Concrete Sidewalk	Remove Tree (Est. Qty. 18)	Abandon Pipe Culvert	Remove Pipe Culvert	Remove Diversion Box	Remove Fire Hydrant	Remove Manhole	Move Mailbox	Remove Fence	Remove Sign	Relocate Water Meter	Remove Bumper Post	Remove and Salvage Precast Concrete Barrier	REMARKS
	STATION	OFFSET	STATION	OFFSET	LUMP	LIN FEET	EACH	LIN FEET	LIN FEET	LIN FEET	SQ YD	LUMP	LIN FEET	LIN FEET	EACH	EACH	EACH	EACH	LIN FEET	EACH	EACH	EACH	EACH	
Cottonwood	30+12.07	24.41 RT													1									
Cottonwood	30+51.94	5.74 LT													1									
Cottonwood	29+45.35	22.96 RT													1									
Cottonwood	33+39.33	7.48 RT													1									
Cottonwood	36+22.93	14.32 RT													1									
Cottonwood	45+24.69	34.06 LT													1									
Cottonwood	25+17.24	18.17 LT														1								
Cottonwood	34+30.69	17.55 RT														1								
Cottonwood	37+01.96	25.75 RT															1							
Cottonwood	38+02.61	20.40 LT															1							
Cottonwood	27+14.31	16.51 LT																1						
Cottonwood	27+92.44	14.99 LT																1						
Cottonwood	25+36.76	14.57 LT																1						
Cottonwood	29+08.75	12.37 LT																1						
Cottonwood	25+05.64	62.73 LT	25+29.08	19.18 LT															67.00					
Cottonwood	25+31.60	21.10 LT	25+62.73	19.23 LT															32.00					
Cottonwood	25+75.96	19.03 LT	26+02.30	18.86 LT															27.00					
Cottonwood	26+30.16	19.06 LT	26+93.47	18.84 LT															64.00					
Cottonwood	27+12.52	19.25 LT	28+61.07	17.81 LT															149.00					
Cottonwood	28+61.07	17.81 LT	28+60.62	48.79 LT															31.00					
Cottonwood	28+92.15	20.17 RT	28+91.99	26.59 RT															7.00					
Cottonwood	28+93.06	19.80 LT	28+93.56	48.34 LT															29.00					
Cottonwood	28+93.06	19.89 LT	33+36.02	2.84 LT															473.00					
Cottonwood	35+99.86	46.12 RT	35+94.97	7.18 RT															40.00					
Cottonwood	35+94.97	7.18 RT	37+52.35	14.39 LT															152.00					
Cottonwood	38+13.47	28.29 LT	39+92.86	60.95 LT															185.00					
Cottonwood	41+42.97	34.64 RT	41+58.28	61.81 RT															60.00					
Cottonwood	41+58.28	61.81 RT	42+78.74	22.40 RT															125.00					
Cottonwood	42+78.74	22.40 RT	42+43.34	25.79 LT															60.00					
Cottonwood	44+89.80	73.67 LT	45+92.15	70.00 RT															177.00					
Cottonwood	44+95.74	74.32 LT	45+96.16	70.00 RT															179.00					
Cottonwood	51+58.26	43.50 LT	51+64.35	36.25 LT															10.00					
Cottonwood	51+64.35	36.25 LT	51+67.78	70.00 RT															107.00					
Cottonwood	51+65.35	24.88 LT																		1				
Cottonwood	51+65.24	12.89 LT																		1				
Cottonwood	51+64.98	1.31 RT																		1				
Cottonwood	51+64.80	15.51 RT																		1				
Cottonwood	51+64.65	21.61 RT																		1				
Cottonwood	27+00.81	21.39 LT	26+91.00	45.00 LT																	1			
Cottonwood	29+86.80	51.87 LT	30+06.00	70.00 LT																	1			
Cottonwood	28+58.38	18.30 LT	28+58.3	45.00LT																	1			
5300 S	125+85.12	49.68 RT																					1	
Cottonwood	31+56.22	31.03 RT																					1	
Cottonwood	31+81.15	32.08 RT																					3	
Cottonwood	32+68.40	38.98 RT	33+05.04	35.03 RT																			1	
Cottonwood	34+10.08	41.38 RT																					8	
Cottonwood	34+95.91	48.09 RT	36+00.06	46.11 RT																				
TOTAL					1	191	1	663	721	20	25	18	1,713	2,378	7	2	2	4	1,974	5	3	1	14	0

1

RELEASE FOR CONSTRUCTION

NO.	DATE	DESCRIPTION

MURRAY CITY CORPORATION
DEPARTMENT OF PUBLIC SERVICES -- ENGINEERING DIVISION
4646 SOUTH 500 WEST, MURRAY UT. 84123 -- (801) 270-2400

DESIGN CP 10/03 CHECK DP 10/03 QA AUDIT
DRAWN BH 10/03 CHECK DP 10/03 DATE
QUANT. ES 10/03 CHECK DP 10/03 BY

APPROVAL RECOMM.: DATE DESIGN ENGINEER
APPROVED DATE PROJECT MANAGER

COTTONWOOD STREET
5600 SOUTH TO VINE STREET
SUMMARY SHEET

PROJECT NUMBER #HPP-STP-2148(110)

SALT LAKE COUNTY

SHEET NO. SM-4A

$FILE$ $DATE$ $TIME$

SEWER WATER SYSTEMS

LINE	FROM STATION	FROM OFFSET	TO STATION	TO OFFSET	PVCPC CLASS A 12 IN FEET	PVCPC CLASS A 8 IN FEET	DIP CLASS 52 8 IN FEET	RECONSTRUCT MANHOLE EACH	48 INCH MANHOLE EACH	FIRE HYDRANTS EACH	18 INCH STEEL CASING FEET
COTTONWOOD STREET	29+34.50	14.45 RT							1		
COTTONWOOD STREET	30+07.04	53.01 LT							1		
COTTONWOOD STREET	32+98.62	42.28 LT							1		
COTTONWOOD STREET	36+18.06	45.77 LT							1		
COTTONWOOD STREET	39+90.15	51.50 LT							1		
COTTONWOOD STREET	40+07.75	43.13 LT							1		
COTTONWOOD STREET	48+17.54	54.50 LT							1		
COTTONWOOD STREET	48+17.54	55.09 RT									
COTTONWOOD STREET	45+83.63	56.42 LT						1			
COTTONWOOD STREET	49+53.47	102.35 LT						1			
COTTONWOOD STREET	29+34.50	14.45 RT	30+07.04	53.01 LT	99						
COTTONWOOD STREET	30+07.04	53.01 LT	32+98.66	42.28 LT	292						
COTTONWOOD STREET	32+98.68	42.28 LT	36+18.06	45.77 LT	324						
COTTONWOOD STREET	36+18.06	45.77 LT	39+90.15	51.50 LT	381						
COTTONWOOD STREET	39+90.15	51.50 LT	40+07.75	43.13 LT	20						
COTTONWOOD STREET	45+83.63	56.42 LT	48+17.54	54.50 LT		260.00					
COTTONWOOD STREET	48+17.54	54.50 LT	49+53.47	102.35 LT		149.00					
COTTONWOOD STREET	48+17.54	54.50 LT	48+17.54	55.09 RT		110.00					
COTTONWOOD STREET	24+90.39	3.75 LT	29+23.57	1.04 LT			433.19				
COTTONWOOD STREET	29+23.57	1.04 LT	29+90.80	63.73 LT			91.92				
COTTONWOOD STREET	29+90.80	63.73 LT	32+07.44	55.80 LT			216.79				
COTTONWOOD STREET	25+20.00	42.30 LT								1	
COTTONWOOD STREET	32+07.44	55.80 LT								1	
COTTONWOOD STREET	48+17.54	54.50 LT	48+17.54	55.09 RT							110
TOTAL					1,116	524	742	2	8	2	110
							1 LUMP				

RELEASE FOR CONSTRUCTION

NO.	DATE	DESCRIPTION

MURRAY CITY CORPORATION
DEPARTMENT OF PUBLIC SERVICES -- ENGINEERING DIVISION
4646 SOUTH 500 WEST, MURRAY UT, 84123 - (801) 270-2400

DESIGN	CP	10/03	CHECK	DTP 10/03
DRAWN	BH	10/03	CHECK	DTP 10/03
QUANT.	ES	10/03	CHECK	DTP 10/03

QA AUDIT
DATE
BY

APPROVAL RECOMM.
DATE
DESIGN ENGINEER

APPROVED
DATE
PROJECT MANAGER

COTTONWOOD STREET
5600 SOUTH TO VINE STREET
SUMMARY SHEET

PROJECT NUMBER #HPP-STP-2148( )0

SALT LAKE COUNTY

BARRIER SUMMARY SHEET

LINE	FROM		TO		PRECAST CONCRETE BARRIER	PRECAST CONCRETE BARRIER HALF SECTION	CAST-IN-PLACE CONSTANT SLOPE BARRIER	CRASH CUSHION TYPE B	REMARKS
	STATION	OFFSET	STATION	OFFSET	FEET	FEET	FEET	EACH	
COTTONWOOD STREET	24+83.26	16.00 RT	25+64.40	20.00 RT	81.23				
COTTONWOOD STREET	25+64.40	20.00 RT	29+79.83	20.00 RT	409.43				
COTTONWOOD STREET	30+16.57	27.34 LT	33+00.00	16.00 LT			283.63		
COTTONWOOD STREET	33+00.00	16.00 LT	35+62.03	16.00 LT			264.13		
COTTONWOOD STREET	46+24.37	16.00 LT	46+25.00	16.00 LT			0.63		
COTTONWOOD STREET	46+25.00	16.00 LT	49+85.00	32.00 LT			316.19		48' Subtracted for Light Pole Foundations
COTTONWOOD STREET	49+85.00	32.00 LT	50+00.00	32.50 LT			15.00		
COTTONWOOD STREET	46+24.37	28.00 RT	46+24.82	28.00 RT			0.45		
COTTONWOOD STREET	46+24.82	28.00 RT	46+54.84	29.00 RT			29.64		
COTTONWOOD STREET	46+54.84	29.00 RT	49+15.00	29.00 RT			256.94		
COTTONWOOD STREET	49+15.00	29.00 RT	50+00.00	32.40 RT			83.89		
5300 SOUTH	126+29.78							1	
5300 SOUTH	124+85.07	1.72 RT	125+49.51	5.28 RT		64			Include Silicone Sealant and Expansion Joint
5300 SOUTH	125+49.81	5.28 RT	126+29.76	1.25 RT		80			Include Silicone Sealant and Expansion Joint
5300 SOUTH	124+85.24	2.11 LT	125+49.60	5.75 LT		64			Include Silicone Sealant and Expansion Joint
5300 SOUTH	125+49.95	5.75 LT	126+29.77	1.31 LT		80			Include Silicone Sealant and Expansion Joint
TOTAL					491	288	1,251	1	

RELEASE FOR CONSTRUCTION

NO.	DATE	DESCRIPTION

MURRAY CITY CORPORATION
DEPARTMENT OF PUBLIC SERVICES -- ENGINEERING DIVISION
4646 SOUTH 500 WEST, MURRAY UT, 84123 - (801) 270-2400

DESIGN CP 10/03 | CHECK DTP 10/03 | QA AUDIT
DRAWN BN 10/03 | CHECK DTP 10/03 | DATE
QUANT. ES 10/03 | CHECK DTP 10/03 | BY

APPROVAL RECOMM. DATE — DESIGN ENGINEER
APPROVED DATE — PROJECT MANAGER

COTTONWOOD STREET
5600 SOUTH TO VINE STREET
SUMMARY SHEET

PROJECT NUMBER *HPP-STP-2148(1)0

SALT LAKE COUNTY

SHEET NO. SM-6

$FILE$ $DATE$ $TIME$

LANDSCAPING SUMMARY

LINE	FROM		TO		GEOTEXTILES-WEED BARRIER	COBBLE ROCK	CRUSHED STONE	PRESSURIZED IRRIGATION SYSTEM	SHREDDED BARK MULCH	WOOD FIBER MULCH	CONTRACTOR FURNISHED TOPSOIL	CONTRACTOR FURNISHED TOPSOIL (6" DEPTH)	ALUMINUM EDGING	BROADCAST SEED	EROSION CONTROL BLANKET	PRUNUS VIRGINIANA 'CANADA RED'. CANADA RED CHOKECHERRY 2" CAL.	MAHONIA AQUIFOLIUM 'COMPACTA'. COMPACT OREGON GRAPE 5 GAL.	FORSYTHIA 'ARNWOLD DWARF'. DWARF FORSYTHIA 5 GAL.	PRUNUS CISTENA. CISTENA PLUM 5 GAL.	MAHONIA REPENS. CREEPING OREGON GRAPE 1 GAL.	ESTABLISHMENT PERIOD	ELECTRICAL WORK (IRRIG. CONTROLLERS)
	STATION	OFFSET	STATION	OFFSET	SQ YD	CU YD	CU YD	LUMP	CU YD	SQ YD	SQ YD	SQ YD	FT	SQ YD	SQ YD	EACH	EACH	EACH	EACH	EACH	LUMP	LUMP
5300 SOUTH	124+56	RT. & LT.	126+90	RT. & LT.				1				334.00	505.00			3	105	21	40	395	1	1
5300 SOUTH	124+56	RT.	126+29	RT.	772.00	50.00	49.00		37.00			496.00	470.00	215.00		6	74	44	62	585		
5300 SOUTH	125+35	LT.	126+90	LT.	698.00	18.00	29.00		54.00	215.00	215.00			967.00	967.00							
COTTONWOOD	48+94.65	83.89 RT	51+70.00	34.50 RT						967.00	967.00			908.00	908.00							
COTTONWOOD	48+92.00	52.00 LT	51+59.18	47.26 LT						908.00	908.00											
TOTAL:					1470	68	78	1	91	2088	2088	830	975	2088	1873	9	179	65	102	980	1	1

RELEASE FOR CONSTRUCTION

NO.	DATE	DESCRIPTION

MURRAY CITY CORPORATION
DEPARTMENT OF PUBLIC SERVICES -- ENGINEERING DIVISION
4646 SOUTH 500 WEST, MURRAY UT. 84123 - (801) 270-2400

APPROVAL RECOMM.
DATE
DESIGN ENGINEER

APPROVED
DATE
PROJECT MANAGER

DESIGN CP 10/03 CHECK DTP 10/03 QA AUDIT
DRAWN BH 10/03 CHECK DTP 10/03 DATE
QUANT. ES 10/03 CHECK DTP 10/03 BY

COTTONWOOD STREET
5600 SOUTH TO VINE STREET
SUMMARY SHEET

SALT LAKE COUNTY

PROJECT NUMBER *HPP-STP-2148(110

SHEET NO. SM-1

DUST CONTROL AND WATERING SUMMARY SHEET

LINE	FROM		TO		LENGTH	WATERING								DUST CONTROL								TOTALS	REMARKS
						EMBANKMENT RATE		EMBANKMENT FOR BRIDGE RATE		GRANULAR BORROW RATE		UNTREATED BASE COURSE RATE		EMBANKMENT RATE		EMBANKMENT FOR BRIDGE RATE		GRANULAR BORROW RATE		UNTREATED BASE COURSE RATE			
						35.0 GAL/CU YD		33.0 GAL/CU YD		33.0 GAL/CU YD		33.0 GAL/CU YD		10.0 GAL/CU YD		10.0 GAL/CU YD		9.0 GAL/CU YD		18.0 GAL/CU YD			
	STATION	OFFSET	STATION	OFFSET	FEET	CU YD	GAL	CU YD	GAL	CU YD	GAL	CU YD	GAL	CU YD	GAL	CU YD	GAL	CU YD	GAL	CU YD	GAL	GAL	
COTTONWOOD STREET	29+54.00		30+20.00			159.45	5580.75							159.45	1594.50							7175.25	ACCESS ROAD
COTTONWOOD STREET	25+50.00		33+11.68			2077.27	72704.45							2077.27	20772.70							93477.15	SOUTH SIDE OF BRIDGE
COTTONWOOD STREET	49+00.00		51+69.00			130.80	4578.00							130.80	1308.00							5886.00	NORTH SIDE OF BRIDGE
COTTONWOOD STREET	45+97.00		49+00.00					10362.00	341946.00							10362.00	103620.00					445566.00	NORTH SIDE OF BRIDGE
COTTONWOOD STREET	24+98		35+63.20							5868.68	193666.44	1012.57	33414.81					5868.68	52818.12	1012.57	18226.28	298125.63	SOUTH SIDE OF BRIDGE
COTTONWOOD STREET	48+25		51+70							617.24	20368.92	387.40	12784.20					617.24	5555.16	387.40	6973.20	45681.46	NORTH SIDE OF BRIDGE
COTTONWOOD STREET	86+59.20		89+54.21							118.31	3904.23	30.86	1018.38					118.31	1064.79	30.86	555.48	6542.88	VINE STREET
5300 SOUTH	124+31.81		126+29.77							345.78	11410.74	78.53	2591.49					345.78	3112.02	78.53	1413.54	18527.79	5300 SOUTH
COTTONWOOD STREET	28+93.00		30+20.00							119.86	3955.38							119.86	1078.74			5034.12	ACCESS ROAD
ACCESS ROAD	0+50.00		8+43.08							931.00	30723.00							931.00	8379.00			39102.00	ACCESS ROAD
COTTONWOOD STREET	28+12.78		28+81.74									8.80	290.40							8.80	158.40	448.80	DRIVEWAY TIE-IN
COTTONWOOD STREET																						45565.00	NORTH WALLS
COTTONWOOD STREET																						286250.32	SOUTH WALLS
COTTONWOOD STREET												233.00	7689.00							233.00	4194.00	11883.00	CONCRETE SUMMARY - UTBC
COTTONWOOD STREET	30+00.00		36+01.00							151.00	4983.00							151.00	1359.00				
5300 SOUTH	124+58.00	RT	126+11.00	RT		410.00	14350.00							410.00	4100.00								
5300 SOUTH	125+35.00	LT	126+90.00	LT		225.00	7875.00							225.00	2250.00								
TOTAL:						105069		341946		269012		57789		30026		103620		73347		31521		1289296	

SUBTOTAL:	1,289,296
DUST CONTROL (25%):	322,317
TOTAL:	1,611,583

RELEASE FOR CONSTRUCTION

NO.	DATE	DESCRIPTION

MURRAY CITY CORPORATION
DEPARTMENT OF PUBLIC SERVICES -- ENGINEERING DIVISION
4646 SOUTH 500 WEST, MURRAY UT, 84123 -- (801) 270-2400

DESIGN	CP	10/03	CHECK	DTP 10/03
DRAWN	BN	10/03	CHECK	DTP 10/03
QUANT.	ES	10/03	CHECK	DTP 10/03

QA AUDIT — DATE — BY

APPROVAL RECOMM. — DESIGN ENGINEER — DATE
APPROVED — PROJECT MANAGER — DATE

COTTONWOOD STREET
5600 SOUTH TO VINE STREET
SUMMARY SHEET

PROJECT NUMBER *HPP-STP-2148(1)0

SALT LAKE COUNTY

SHEET NO. SM-3

$DATE$ $TIME$

MISCELLANEOUS SUMMARY SHEET

LINE	FROM		TO		QUANTITY	UNIT	REMARKS
	STATION	OFFSET	STATION	OFFSET			
COTTONWOOD STREET	29+79.83	20.00 RT	30+00.00	20.00 RT	1	EA	PRECAST BARRIER TRANSITION
COTTONWOOD STREET	30+00.57	27.98 LT	30+16.57	27.34 LT	1	EA	BARRIER END SECTION
COTTONWOOD STREET	35+62.03	16.00 LT	35+63.03	16.00 LT	1	EA	BARRIER TO PARAPET TRANSITION
COTTONWOOD STREET	39+50.93	38.55 RT			1	EA	HYDRAULIC BUMPING POST
COTTONWOOD STREET	41+23.33	0.93 RT			1	EA	HYDRAULIC BUMPING POST
COTTONWOOD STREET	39+75.42	46.18 RT	40+13.64	35.69 RT	39	FT	RECONSTRUCT RAILROAD TRACK
COTTONWOOD STREET	46+23.37	28.00 RT	46+24.37	28.00 LT	1	EA	BARRIER TO PARAPET TRANSITION
COTTONWOOD STREET	46+23.37	16.00 LT	46+24.37	16.00 LT	1	EA	BARRIER TO PARAPET TRANSITION
COTTONWOOD STREET	50+00.00	32.50 LT	50+19.00	31.00 LT	1	EA	BARRIER TURN DOWN END SECTION
COTTONWOOD STREET	50+00.00	32.40 RT	50+19.00	31.00 RT	1	EA	BARRIER TURN DOWN END SECTION
COTTONWOOD STREET	51+55.35	31.00 LT	51+65.35	31.00 LT	1	EA	CURB AND GUTTER TRANSITION
5300 SOUTH	124+78.17		124+85.08		1	EA	BARRIER TRANSITION
COTTONWOOD STREET	46+40.00	CTR			1	EA	SETTLEMENT PLATFORM
COTTONWOOD STREET	48+20.00	CTR			1	EA	SETTLEMENT PLATFORM
COTTONWOOD STREET	32+00.00	CTR			1	EA	SETTLEMENT PLATFORM
COTTONWOOD STREET	34+60.00	CTR			1	EA	SETTLEMENT PLATFORM
COTTONWOOD STREET	35+00.00	32.50 LT.	35+00.00	40.50 RT	1	EA	HORIZONTAL INCLINOMETER
COTTONWOOD STREET	38+05.00	CTR			1	EA	SETTLEMENT PLATFORM
COTTONWOOD STREET	45+98.00	CTR			1	EA	SETTLEMENT PLATFORM
COTTONWOOD STREET	46+60.00	LT			1	EA	LIGHT POLE FOUNDATION
COTTONWOOD STREET	46+60.00	RT			1	EA	LIGHT POLE FOUNDATION
COTTONWOOD STREET	48+40.00	LT			1	EA	LIGHT POLE FOUNDATION
COTTONWOOD STREET	48+40.00	RT			1	EA	LIGHT POLE FOUNDATION
COTTONWOOD STREET	49+90.00	LT			1	EA	LIGHT POLE FOUNDATION
COTTONWOOD STREET	49+90.00	RT			1	EA	LIGHT POLE FOUNDATION
5300 SOUTH	124+70	RT	126+20	RT	150	FT	SILT FENCE
5300 SOUTH	125+35	LT	126+85	LT	150	FT	SILT FENCE

RELEASE FOR CONSTRUCTION

NO.	DATE	DESCRIPTION

MURRAY CITY CORPORATION
DEPARTMENT OF PUBLIC SERVICES -- ENGINEERING DIVISION
4646 SOUTH 500 WEST, MURRAY UT, 84123 - (801) 270-2400

APPROVAL RECOMM: DATE — DESIGN ENGINEER — DESIGN CP 10/03 — QA AUDIT
APPROVED DATE — PROJECT MANAGER — DRAWN BH 10/03 CHECK DTP 10/03 DATE
QUANT. ES 10/03 CHECK DTP 10/03 BY

COTTONWOOD STREET
5600 SOUTH TO VINE STREET
SUMMARY SHEET

PROJECT NUMBER *HPP--STP--2148(110

SALT LAKE COUNTY

SHEET NO. SM-1.0

SURFACING SUMMARY

LINE	STATION FROM	STATION TO	LENGTH FEET	BASE COURSES: GRANULAR BORROW (144 LB/FT³) AVG WIDTH FEET	DEPTH IN	VOL FT³	TON	UNTREATED BASE COURSE 3/4" OR 1" MAX (144 LB/FT³) AVG WIDTH FEET	DEPTH IN	VOL FT³	TON	HOT MIX ASPHALT HMA - 3/4" (PG 64-28) (144 LB/FT³) AVG WIDTH FEET	DEPTH IN	VOL FT³	TON	OPEN GRADED SURFACE COURSE: OPEN GRADED SURFACE COURSE (131 LB/FT³) AVG WIDTH FEET	DEPTH IN	VOL FT³	TON	ASPHALT CEMENT PG 64-28 0.06 TON	EMULSIFIED ASPHALT CSS-1 0.06 240.00 TON	Remarks
COTTONWOOD STREET	24+96.00	26+04.00			23	10706.60	770.88		6	2797.60	201.43		6	2574.30	185.34		1	427.67	28.01	1.74	0.38	SOUTH OF BRIDGE
COTTONWOOD STREET	26+04.00	30+00.00			23	41978.46	3022.45		6	11032.93	794.37		6	9845.19	708.85		1	1814.71	118.86	7.37	1.61	SOUTH OF BRIDGE
COTTONWOOD STREET	30+00.00	33+20.00			VARIES	63158.00	4547.38		6	8204.73	590.74		6	7817.39	562.85		1	1394.62	91.35	5.66	1.24	SOUTH OF BRIDGE
COTTONWOOD STREET	33+20.00	33+81.37			VARIES	12911.24	929.61		6	1337.08	96.27		6	1424.94	102.60		1	336.17	22.02	1.37	0.30	SOUTH OF BRIDGE
COTTONWOOD STREET	33+81.37	35+63.20			VARIES	39719.41	2859.80		6	3967.04	285.63		6	4241.36	305.38		1	751.21	49.20	3.05	0.67	SOUTH OF BRIDGE
COTTONWOOD STREET	46+23.20	46+50.00			12	1435.86	103.38		6	696.60	50.16		6	640.00	46.08		1	105.71	6.92	0.43	0.09	NORTH OF BRIDGE
COTTONWOOD STREET	46+50.00	46+75.00			12	1387.62	99.91		6	687.50	49.50		6	660.00	47.52		1	108.79	7.13	0.44	0.10	NORTH OF BRIDGE
COTTONWOOD STREET	46+75.00	47+00.00			12	1414.48	101.84		6	681.25	49.05		6	673.75	48.51		1	110.99	7.27	0.46	0.10	NORTH OF BRIDGE
COTTONWOOD STREET	47+00.00	47+25.00			12	1439.54	103.65		6	693.75	49.95		6	686.25	49.41		1	113.11	7.41	0.46	0.10	NORTH OF BRIDGE
COTTONWOOD STREET	47+25.00	47+50.00			12	1464.68	105.46		6	706.25	50.85		6	698.75	50.31		1	115.26	7.55	0.47	0.10	NORTH OF BRIDGE
COTTONWOOD STREET	47+50.00	47+75.00			12	1489.97	107.28		6	718.75	51.75		6	711.25	51.21		1	118.92	7.79	0.48	0.11	NORTH OF BRIDGE
COTTONWOOD STREET	47+75.00	48+00.00			12	1515.45	109.11		6	731.25	52.65		6	725.00	52.20		1	121.01	7.93	0.49	0.11	NORTH OF BRIDGE
COTTONWOOD STREET	48+00.00	48+25.00			12	1540.63	110.93		6	743.75	53.55		6	745.00	53.64		1	123.90	8.12	0.50	0.11	NORTH OF BRIDGE
COTTONWOOD STREET	48+25.00	48+50.00			12	1565.85	112.73		6	756.25	54.45		6	763.75	54.99		1	126.18	8.26	0.51	0.11	NORTH OF BRIDGE
COTTONWOOD STREET	48+50.00	48+75.00			12	1577.83	113.60		6	772.25	55.60		6	776.25	55.89		1	128.25	8.40	0.52	0.11	NORTH OF BRIDGE
COTTONWOOD STREET	48+75.00	49+00.00			VARIES	914.37	65.83		VARIES	465.20	47.17		6	791.25	46.97		1	130.58	8.55	0.53	0.12	NORTH OF BRIDGE
COTTONWOOD STREET	49+00.00	49+25.00			VARIES	232.69	16.75		VARIES	464.60	33.45		6	816.25	58.77		1	134.78	8.83	0.55	0.12	NORTH OF BRIDGE
COTTONWOOD STREET	49+25.00	49+50.00			VARIES	200.15	14.41		VARIES	379.95	27.36		6	848.75	61.11		1	140.55	9.21	0.57	0.12	NORTH OF BRIDGE
COTTONWOOD STREET	49+50.00	49+75.00			VARIES	184.63	13.29		VARIES	347.90	25.05		6	878.75	63.27		1	145.59	9.54	0.59	0.13	NORTH OF BRIDGE
COTTONWOOD STREET	49+75.00	50+00.00			VARIES	165.87	11.94		VARIES	345.40	24.87		6	905.00	62.28		1	145.37	9.52	0.59	0.13	NORTH OF BRIDGE
COTTONWOOD STREET	50+00.00	50+25.00			VARIES	96.00	6.91		VARIES	315.59	22.73		6	906.25	58.06		1	142.36	9.32	0.58	0.13	NORTH OF BRIDGE
COTTONWOOD STREET	50+25.00	50+50.00			VARIES	30.89	2.22		VARIES	262.19	18.86		6	775.00	55.80		1	138.97	9.10	0.56	0.12	NORTH OF BRIDGE
COTTONWOOD STREET	50+50.00	50+75.00			VARIES	9.17	0.66		VARIES	199.15	14.34		6	775.00	55.80		1	136.38	8.93	0.55	0.12	NORTH OF BRIDGE
COTTONWOOD STREET	50+75.00	51+00.00			VARIES	0.00	0.00		VARIES	157.50	11.34		6	775.00	55.80		1	132.85	8.70	0.54	0.12	NORTH OF BRIDGE
COTTONWOOD STREET	51+00.00	51+25.00			VARIES	0.00	0.00		VARIES	123.31	8.88		6	775.00	55.80		1	129.30	8.47	0.53	0.11	NORTH OF BRIDGE
COTTONWOOD STREET	51+25.00	51+50.00			VARIES	0.00	0.00		VARIES	41.41	2.98		6	775.00	55.80		1	85.07	4.26	0.26	0.06	NORTH OF BRIDGE
COTTONWOOD STREET	51+50.00	51+70.00			VARIES	0.00	0.00		VARIES	0.00	0.00		6	300.00	28.08							
																						FACE OF WALLS MSE -923-3 AND GEC-923-
COTTONWOOD STREET	30+00.00	36+01.00			12	4090.00	294.48															
COTTONWOOD STREET	86+59.20	89+54.21	295		23	3194.4444	230.00		6	833.33	60.00		6	833.33	60.00		1	137.40	9.00	0.56	0.12	VINE STREET
								12	6	21.60	1.56		3	10.80	0.78							DRIVEWAY TIE-IN
COTTONWOOD STREET	26+12.78	26+24.78						12	6	85.00	6.12		3	42.38	3.05							DRIVEWAY TIE-IN
COTTONWOOD STREET	26+98.38	27+10.42						12	6	59.00	4.25											DRIVEWAY TIE-IN
COTTONWOOD STREET	25+60.30	25+72.30						12	6	72.00	5.18											DRIVEWAY TIE-IN
COTTONWOOD STREET	26+69.74	26+81.74																				
5300 SOUTH	124+31.81	125+34.65	103	13.7	23	2700.407	194.43	14	6	719.88	51.83	14	6	719.88	51.83	14	1	119.98	7.85	0.49	0.11	5300 SOUTH REPLACEMENT
5300 SOUTH	125+34.65	125+65.15	31	31	23	1812.2083	130.48	31	6	472.75	34.04	31	6	472.75	34.04	33	1	63.88	5.49	0.34	0.07	5300 SOUTH REPLACEMENT
5300 SOUTH	125+65.15	126+97.69	133	14	23	3556.49	256.07	14	6	927.78	66.80	14	6	927.78	66.80	14	1	154.63	10.13	0.63	0.14	5300 SOUTH REPLACEMENT
5300 SOUTH	124+85.07	126+29.77			23	1267	91.22															BETWEEN BARRIERS
																						ACCESS ROAD SHEET DT-14
COTTONWOOD STREET	28+93.00	30+20.00			12	1206.1111	233.00															ACCESS ROAD
ACCESS ROAD	0+80.00	8+36.87			12	14541.667	1047.00															ACCESS ROAD SHEET DT-15
ACCESS ROAD	8+36.87	8+43.08			12	10597.222	763.00		3	152.00	10.94											
TOTAL							16,570				2,983				3,259				522	33.00	8.00	

RELEASE FOR CONSTRUCTION

NO.	DATE	DESCRIPTION

MURRAY CITY CORPORATION
DEPARTMENT OF PUBLIC SERVICES -- ENGINEERING DIVISION
4646 SOUTH 500 WEST, MURRAY UT, 84123 -- (801) 270-2400

DESIGN CP 10/03	CHECK DTP 10/03	QA AUDIT	
DRAWN BN 10/03	CHECK DTP 10/03	DATE	
QUANT. ES 10/03	CHECK DTP 10/03	BY	

DESIGN ENGINEER DATE — PROJECT MANAGER DATE — APPROVED DATE — APPROVAL RECOMMENDED DATE

COTTONWOOD STREET
5600 SOUTH TO VINE STREET
SUMMARY SHEET
PROJECT NUMBER #HPP-STP-2148(110)

SALT LAKE COUNTY

SHEET NO. SM-10

@DATE@ @TIME@

@FILES@

CONCRETE SUMMARY SHEET

LINE	FROM		TO		CONCRETE CURB & GUTTER		DRIVEWAY		PLOW-ABLE END SECTION	MODIFIED PLOW-ABLE END SECTION	SIDEWALK	FLAT WORK-PATTERNED\COLORED		FLATWORK	FLATWORK	FLATWORK	PED RAMP TYPE E	UNTREATED BASE COURSE	REMARKS
					TYPE M2	TYPE B1	6" FLARED	7" FLARED			CONCRETE	4" THICK	7" THICK	7" THICK	6" THICK	4" THICK		3/4" OR 1" MAX	
	STATION	OFFSET	STATION	OFFSET	FEET	FEET	SQ FEET	SQ FEET	EACH	EACH	SQ. YDS.	SQ FEET	SQ FEET	SQ FEET	SQ FEET	SQ FEET	SQ FEET	TON	
COTTONWOOD STREET	25+00.03	53.50 LT	25+27.52	26.00 LT		43.14													
COTTONWOOD STREET	25+27.52	26.00 LT	25+51.63	26.00 LT		24.11												4.29	
COTTONWOOD STREET	25+51.63	26.00 LT	25+81.04	26.00 LT			238.09												
COTTONWOOD STREET	25+81.04	26.00 LT	26+04.07	26.00 LT		23.03												4.29	
COTTONWOOD STREET	26+04.07	26.00 LT	26+33.49	26.00 LT				238.09											
COTTONWOOD STREET	26+33.49	26.00 LT	26+89.64	26.00 LT		56.06												4.93	
COTTONWOOD STREET	26+89.64	26.00 LT	27+19.15	26.00 LT				274.09											
COTTONWOOD STREET	27+19.15	26.00 LT	27+93.67	26.00 LT		74.33												4.93	
COTTONWOOD STREET	27+93.67	26.00 LT	28+23.19	26.00 LT			274.09												
COTTONWOOD STREET	28+23.19	26.00 LT	28+57.34	26.00 LT		34.00												6.61	
COTTONWOOD STREET	28+57.34	26.00 LT	28+93.49	26.00 LT				367.00										11.07	
COTTONWOOD STREET	28+93.49	26.00 LT	29+46.44	26.00 LT				615.00										12.19	
COTTONWOOD STREET	29+46.44	26.00 LT	30+00.57	26.00 LT				677.00										3.08	
COTTONWOOD STREET	25+12.53	53.50 LT	25+27.53	38.50 LT							19.00							5.76	
COTTONWOOD STREET	25+27.53	38.50 LT	25+60.30	38.50 LT							35.56							6.58	
COTTONWOOD STREET	25+72.30	38.50 LT	26+12.78	38.50 LT							40.62							13.77	
COTTONWOOD STREET	26+24.78	38.50 LT	26+98.37	41.50 LT							85.01							16.44	
COTTONWOOD STREET	27+10.42	41.50 LT	28+02.41	41.50 LT							101.48							9.33	
COTTONWOOD STREET	28+14.45	41.50 LT	28+66.87	41.50 LT							57.58							2.71	
COTTONWOOD STREET	28+84.97	41.50 LT	29+02.07	41.50 LT										150.79				3.17	
COTTONWOOD STREET	29+36.21	41.50 LT	29+56.13	41.50 LT										175.88				4.22	
COTTONWOOD STREET	27+15.29	31.50 LT	27+97.42	31.50 LT								234.26						2.05	
COTTONWOOD STREET	28+19.45	31.50 LT	28+61.42	31.50 LT								113.85						0.20	
COTTONWOOD STREET	28+89.85	31.50 LT	28+97.17	31.50 LT									11.00					0.23	
COTTONWOOD STREET	29+42.03	31.50 LT	29+50.61	31.50 LT									13.00					1.36	BEHIND DRIVEWAY
COTTONWOOD STREET	28+08.43	41.50 LT	28+08.43	47.78 LT											75.36			98.76	
COTTONWOOD STREET	48+23.37	29.00 LT	51+59.18	43.50 LT							609.63								
COTTONWOOD STREET	50+19.00	31.00 LT	51+55.35	31.00 LT		136.00													
COTTONWOOD STREET	50+19.00	31.00 RT	51+70.00	31.00 RT		151.09													
VINE STREET	86+59.20	7.28 RT	86+65.20	7.28 RT					1										
VINE STREET	89+48.21	1.44 LT	89+54.21	1.44 LT					1										
VINE STREET	86+65.20	7.28 RT	87+15.14	7.28 RT	100.25														
VINE STREET	87+15.14	7.28 RT	87+43.96	1.44 LT	90.21														
VINE STREET	87+43.96	1.44 LT	89+48.21	1.44 LT	408.14													0.45	
5300 SOUTH	124+98.55	43.40 RT	125+08.62	43.49 RT		10.07												1.08	
5300 SOUTH	124+98.55	43.40 RT	125+08.62	43.49 RT							6.66							0.45	
5300 SOUTH	125+63.95	43.50 LT	125+73.87	43.54 LT		9.92												1.03	
5300 SOUTH	125+63.95	43.50 LT	125+73.87	43.54 LT							6.36								
5300 SOUTH	124+31.81	6.38 RT	124+37.82	6.41 RT						1									
5300 SOUTH	124+31.81	7.23 LT	124+37.81	7.24 LT						1									
5300 SOUTH	126+91.68	6.33 RT	126+97.69	6.25 RT						1									
5300 SOUTH	126+91.70	7.41 LT	126+97.69	7.49 LT						1									
5300 SOUTH	124+85.07		126+29.77													608.00		11.00	
																	150.69	2.71	
COTTONWOOD STREET	25+08.08	34.07 LT.																233	
TOTAL					569	562	513	2,172	2	4	962	349	24	327	76	608	151		

RELEASE FOR CONSTRUCTION

NO.	DATE	DESCRIPTION

MURRAY CITY CORPORATION
DEPARTMENT OF PUBLIC SERVICES -- ENGINEERING DIVISION
4646 SOUTH 500 WEST, MURRAY UT, 84123 - (801) 270-2400

DESIGN	CP	10/03	CHECK	DTP	10/03	QA AUDIT
DRAWN	BN	10/03	CHECK	DTP	10/03	DATE
QUANT.	ES	10/03	CHECK	DTP	10/03	BY

APPROVAL RECOMM. _____ DATE _____ DESIGN ENGINEER
APPROVED _____ DATE _____ PROJECT MANAGER

COTTONWOOD STREET
5600 SOUTH TO VINE STREET
SUMMARY SHEET
PROJECT NUMBER #HPP-STP-2148(110

SALT LAKE COUNTY

SHEET NO. SM-11

FENCING SUMMARY SHEET

LINE	FROM		TO		CHAIN LINK FENCE AND GATE										REMARKS
					ORNAMENTAL IRON FENCE	6 FT CHAIN LINK FENCE		7 FT CHAIN LINK FENCE	CHAIN LINK GATE						
						TYPE I w/Barbed Wire	TYPE I VINYL COATED	TYPE I VINYL COATED WITH BARBED WIRE	H=6 X W=4	H=6 X W=6	H=6 X W=10	H=6 X W=12	H=6 X W=20	RELOCATE GATE	
	STATION	OFFSET	STATION	OFFSET	FEET	FEET	FEET	FEET	EA	EA	EA	EA	EA	EA	
COTTONWOOD STREET	28+93.58	47.00 LT	29+13.58	46.50 LT							2				
COTTONWOOD STREET	29+13.58	46.50 LT	29+39.29	45.86 LT		25.50									
COTTONWOOD STREET	29+39.29	45.86 LT	29+54.94	50.98 LT		16.40									
COTTONWOOD STREET	29+54.94	50.98 LT	29+54.99	60.67 LT		9.69									
COTTONWOOD STREET	29+54.99	60.67 LT	29+55.00	64.67 LT					1						
COTTONWOOD STREET	29+55.00	64.67 LT	29+55.01	66.41 LT		1.74									
COTTONWOOD STREET	29+55.01	66.41 LT	29+95.26	65.12 LT										2	
ACCESS ROAD	0+25.19	2.00 LT	0+80.30	2.00 LT		55.09									
ACCESS ROAD	0+30.74	21.69 RT	0+30.84	1.69 RT							2				ACCESS ROAD GATE
ACCESS ROAD	0+30.84	1.69 RT	0+30.86	2.00 LT		3.89									
ACCESS ROAD	0+80.30	2.00 LT	1+29.84	2.00 LT		49.54									
ACCESS ROAD	1+29.84	2.00 LT	1+69.86	2.00 LT									2		
ACCESS ROAD	1+69.86	2.00 LT	2+63.86	2.00 LT		94.00									
ACCESS ROAD	3+03.86	2.00 LT	3+11.05	2.00 LT		7.04									
ACCESS ROAD	3+11.05	2.00 LT	4+06.60	2.00 LT		95.53									
ACCESS ROAD	4+06.60	2.00 LT	4+30.47	1.68 LT		23.68									
ACCESS ROAD	2+63.86	2.00 LT	3+03.86	2.00 LT									2		
COTTONWOOD STREET	30+00.00	41.25 LT	33+00.00	29.25 LT	300.00										
COTTONWOOD STREET	33+00.00	29.25 LT	34+00.00	29.25 LT	100.00										
ACCESS ROAD	4+30.47	1.68 LT	4+61.67	2.00 LT		31.34									
ACCESS ROAD	4+61.67	2.00 LT	5+10.98	1.71 LT		49.37									
ACCESS ROAD	5+10.98	1.71 LT	7+13.33	2.00 LT		202.67									
ACCESS ROAD	7+13.33	2.00 LT	8+43.66	2.00 LT		130.53									
ACCESS ROAD	6+36.87	26.78 RT	6+36.89	24.19 RT		2.59									
ACCESS ROAD	6+36.89	24.19 RT	6+37.12	0.19 RT								2			
ACCESS ROAD	6+37.12	0.19 RT	6+37.15	2.41 RT		2.22									
COTTONWOOD STREET	38+00.31	49.55 LT	38+88.55	63.92 LT		91.48									
COTTONWOOD STREET	38+88.55	63.92 LT	39+00.00	63.37 LT		11.80									
COTTONWOOD STREET	34+00.00	29.25 LT	34+80.57	29.25 LT	80.57										
COTTONWOOD STREET	34+80.57	29.25 LT	35+63.03	29.25 LT	84.49										
COTTONWOOD STREET	39+00.00	63.37 LT	39+92.86	60.95 LT		95.29									
COTTONWOOD STREET	36+01.50	46.03 RT	36+01.44	40.44 RT		5.59									
COTTONWOOD STREET	36+01.39	34.44 RT	36+01.33	28.85 RT		5.59									
COTTONWOOD STREET	36+01.44	40.44 RT	36+01.39	34.44 RT						1					
COTTONWOOD STREET	41+43.06	35.00 RT	43+00.29	35.00 RT		154.00									
COTTONWOOD STREET	43+00.29	35.00 RT	43+12.47	35.00 RT								1			
COTTONWOOD STREET	43+12.47	35.00 RT	43+20.88	35.00 RT		8.41									
COTTONWOOD STREET	43+20.88	35.00 RT	42+71.80	32.25 LT		83.02									
COTTONWOOD STREET	44+89.48	73.72 LT	44+95.72	74.37 LT		6.46									
COTTONWOOD STREET	45+82.00	50.00 LT	47+25.00	50.00 LT			143.00								
COTTONWOOD STREET	46+22.87	29.50 LT	46+22.67	50.00 LT			20.50								
COTTONWOOD STREET	47+25.00	50.00 LT	48+61.00	50.00 LT				136.00							
COTTONWOOD STREET	48+61.00	50.00 LT	48+92.00	57.50 LT				32.00							
COTTONWOOD STREET	48+61.00	57.50 LT	49+00.00	57.50 LT				39.00							
COTTONWOOD STREET	49+00.00	57.50 LT	49+88.54	57.50 LT				87.66							
TOTAL					566	1263	164	295	1	1	4	3	4	2	

RELEASE FOR CONSTRUCTION

NO.	DATE	DESCRIPTION

MURRAY CITY CORPORATION
DEPARTMENT OF PUBLIC SERVICES -- ENGINEERING DIVISION
4646 SOUTH 500 WEST, MURRAY UT, 84123 - (801) 270-2400

DESIGN CP 10/03 CHECK | DRAWN BH 10/03 CHECK | QUANT. ES 10/03 CHECK | QA AUDIT DTP 10/03 DATE DTP 10/03 BY

APPROVAL RECOMM. DATE — DESIGN ENGINEER
APPROVED DATE — PROJECT MANAGER

COTTONWOOD STREET
5600 SOUTH TO VINE STREET
SUMMARY SHEET

PROJECT NUMBER #HPP-STP-2148(110

SALT LAKE COUNTY

SHEET NO. SM-12

EARTHWORK SUMMARY SHEET

LINE	STATION FROM	STATION TO	LENGTH FEET	ROADWAY EXCAVATION (PLAN QUANTITY) CU/YD	EMBANKMENT CU/YD	EMBANKMENT X 1.21 CU/YD	BORROW (130 LB/FT^3) CU /YD	BORROW (130 LB/FT^3) TON	EMBANKMENT FOR BRIDGE (144 LB/FT^3) TONS	SOLID DISPOSAL AT SLVSWMF (120 LB/FT^3) TONS	SOLID DISPOSAL AT SAFE HARBORS (120 LB/FT^3) TON	SURCHARGE (144 LB/FT^3) TONS	REMARKS
ACCESS ROAD	0+50.00	6+36.87		536.58									ACCESS ROAD
ACCESS ROAD	6+36.87	8+43.08		392.00									DT-15
COTTONWOOD	29+54.00	29+56.00					2.53	4.44					DT-14
COTTONWOOD	29+56.00	29+95.00					117.87	206.86					DT-14
COTTONWOOD	29+95.00	29+97.00					5.44	9.55					DT-14
COTTONWOOD	29+97.00	30+20.00					33.81	59.99					DT-14
COTTONWOOD STREET	24+96.00	25+27.53		226.29									SOUTH OF BRIDGE
COTTONWOOD STREET	25+27.53	25+50.00		142.10									SOUTH OF BRIDGE
COTTONWOOD STREET	25+50.00	26+00.00		289.23			4.52	7.92					SOUTH OF BRIDGE
COTTONWOOD STREET	26+00.00	26+50.00		282.01			9.22	16.17					SOUTH OF BRIDGE
COTTONWOOD STREET	26+50.00	27+00.00		285.62			10.27	18.03					SOUTH OF BRIDGE
COTTONWOOD STREET	27+00.00	27+50.00		289.99			12.79	22.45					SOUTH OF BRIDGE
COTTONWOOD STREET	27+50.00	28+00.00		293.47			7.22	12.67					SOUTH OF BRIDGE
COTTONWOOD STREET	28+00.00	28+50.00		289.72			1.80	3.16					SOUTH OF BRIDGE
COTTONWOOD STREET	28+50.00	29+00.00		282.91			17.03	29.89					SOUTH OF BRIDGE
COTTONWOOD STREET	29+00.00	29+50.00		206.74			41.56	72.94					SOUTH OF BRIDGE
COTTONWOOD STREET	29+50.00	30+00.00		112.65			105.42	185.01					SOUTH OF BRIDGE
COTTONWOOD STREET	30+00.00	30+50.00		25.07			124.55	218.59					SOUTH OF BRIDGE
COTTONWOOD STREET	30+50.00	31+00.00					285.19	500.51					SOUTH OF BRIDGE
COTTONWOOD STREET	31+00.00	31+50.00					487.92	856.30					SOUTH OF BRIDGE
COTTONWOOD STREET	31+50.00	33+11.86					657.19	1153.37					
									20142.89				NORTH OF BRIDGE
COTTONWOOD STREET	45+97.00	49+00.00		271.35									
							130.80	229.55					NORTH OF BRIDGE
COTTONWOOD STREET	49+00.00	51+69.00		244.21									
													VINE
COTTONWOOD STREET	86+59.20	89+54.21		198.67									
							410.00	719.55					DT-5
5300 SOUTH	124+56	126+11	RT				225.00	394.88					DT-5
5300 SOUTH	125+36	126+90	LT										
5300 SOUTH	124+31.81	126+91.70		480.00						14000.00			
COTTONWOOD STREET	24+96.00	91+10.00									10.00		
COTTONWOOD STREET	24+96.00	91+10.00										6109.00	
COTTONWOOD STREET	30+85.00	35+73.71										12187.00	
COTTONWOOD STREET	46+31.28	48+70.00											
TOTAL				4,851	0	0	2,880	4,721	20,143	14,000	10	18,296	

RELEASE FOR CONSTRUCTION

NO.	DATE	DESCRIPTION

MURRAY CITY CORPORATION
DEPARTMENT OF PUBLIC SERVICES -- ENGINEERING DIVISION
4646 SOUTH 500 WEST, MURRAY UT. 84123 - (801) 270-2400

DESIGN CP 10/03 CHECK DTP 10/03 QA AUDIT
DRAWN BH 10/03 CHECK DTP 10/03 DATE
QUANT. ES 10/03 CHECK DTP 10/03 BY

APPROVAL RECOMM. ____ DATE ____ DESIGN ENGINEER
APPROVED ____ DATE ____ PROJECT MANAGER

COTTONWOOD STREET
5600 SOUTH TO VINE STREET
SUMMARY SHEET

PROJECT NUMBER #HPP-STP-2148(110)

SALT LAKE COUNTY

SHEET NO. SM-13

DRAINAGE SYSTEMS

LINE	FROM STATION	FROM OFFSET	TO STATION	TO OFFSET	ID #	PIPE CULVERT RCPC Class B 18 IN FEET	RCPC Class B 15 IN FEET	PVCPC Class A 12 IN FEET	PVCPC Class C 6 IN FEET	UNDERDRAIN, 6 INCH FEET	SMALL STRUCTURES DRAWING #	COLUMN	LINE	UNDERDRAIN GRANULAR BACKFILL (PLAN QUANTITY) CU YD(S)	UD VENT EACH	UD OUTLET EACH	UD CLEANOUT EACH	UD 90 ELBOW EACH	TURNED GRATE AND FRAME EACH	CONCRETE SMALL STRUCTURE CU YD(S)	REINFORCING STEEL COATED POUNDS	CONNECT PIPE TO EXISTING CLEANOUT BOX EACH	GRATE & FRAME Std Dwg GF3 (BICYCLE SAFE) EACH	DROP-INLET BARRIERS (STRAW OR HAY BALE) FT	DROP-INLET BARRIERS (STONE) CU YD(S)	SOLID COVER & FRAME Std Dwg GF5 EACH
Cottonwood	25+42.04	27.83 LT	28+30.74	27.83 LT		288.00																				
Cottonwood	28+30.74	27.83 LT	29+97.67	27.83 LT		163.00																				
Cottonwood	29+97.67	27.83 LT	29+98.80	59.27 LT		28.00																				
Cottonwood/Access Road	29+98.80	59.27 LT	2+54.64	5.09 RT		221.00																				
Access Road	2+54.64	5.09 RT	6+05.09	5.91 RT		345.00																				
Access Road	6+05.09	5.91 RT	6+77.97	1.07 RT		69.00																				
Access Road/Cottonwood	6+77.97	1.07 RT	39+94.23	58.84 LT		359.00																				
Cottonwood	39+94.23	58.84 LT	40+82.25	68.27 LT		86.00																				
Cottonwood	28+67.54	20.00 RT	28+30.74	20.00 RT		161.00																				
Cottonwood	28+30.74	20.00 RT	29+97.00	19.50 RT		163.00																				
Cottonwood	29+97.00	19.50 RT	29+97.67	27.83 LT		40.00																				
Cottonwood	29+97.00	19.50 RT	32+09.63	24.85 RT			208.00																			
Cottonwood	35+69.53	27.00 RT	35+69.53	17.50 LT			41.00																			
Access Road	6+78.07	12.68 RT	6+77.97	1.07 RT			8.00																			
Downdrain	35+69.53	17.50 LT						25.00																		
Cottonwood/Access Road	35+69.53	17.50 LT	6+05.09	5.91 RT				25.00																		
Cottonwood	46+16.87	17.50 LT	46+16.87	28.00 RT			42.00																			
Cottonwood	46+16.87	28.00 RT	48+70.00	28.94 RT			248.00																			
Cottonwood	48+70.00	28.94 RT	49+30.14	46.41 RT			58.00																			
Cottonwood	49+30.14	46.41 RT	52+00.00	59.12 RT			257.00																			
Cottonwood	51+45.50	32.83 LT	51+45.50	48.88 LT			15.00																			
Cottonwood	25+42.04	27.83 LT	25+42.04	21.00 RT					45.00								2	1								
Cottonwood	25+42.04	21.00 RT	28+67.54	20.00 RT						123.00																
Cottonwood	28+67.54	20.00 RT	28+30.74	20.00 RT						161.00																
Cottonwood	28+30.74	20.00 RT	29+97.00	19.50 RT						163.00																
											DR-1	A	4			1				1.17	225.00		1		2.89	
Cottonwood	25+42.04	27.83 LT			CB 1-1						DR-1	D	10		2					3.23	402.00		1		2.89	
Cottonwood	28+67.54	20.00 RT			CB 1-2						DR-1	A	1			2				1.29	184.00		1		2.89	
Cottonwood	28+30.74	20.00 RT			CB 1-3						DR-1	A	5							1.86	250.00		1		2.89	
Cottonwood	28+30.74	27.83 LT			CB 1-4						DR-2	A	6		1					2.03	259.00		1		2.89	
Cottonwood	29+97.00	19.50 RT			CB 2-1						DR-2	A	12							2.66	351.00		1			
Cottonwood	29+97.67	27.83 LT			CB 2-2						DR-2	A	10							2.67	328.00		1	20.00		
Cottonwood	29+98.80	59.27 LT			CB 2-3						DR-2	A	8							2.28	292.00		1	20.00		
Access Road	2+54.64	5.09 RT			CB 2-4						DR-2	A	7							2.23	284.00		1		2.89	
Cottonwood	32+09.63	24.85 RT			CB 2-5						DR-3	A	7		1					2.23	284.00				2.89	
Cottonwood	35+69.53	27.00 RT			CB 3-1						DR-3	A	11							2.80	351.00		1			
Cottonwood	35+69.53	17.50 LT			CB 3-2						DR-3	A	9							2.42	317.00		1	20.00		
Access Road	6+05.09	5.91 RT			CB 3-3						DR-3	A	9							2.42	317.00		1	20.00		
Access Road	6+77.97	1.07 RT			CB 3-4						DR-3	A	3							1.66	217.00		1	20.00		
Access Road	6+78.07	12.68 RT			CB 3-5						DR-4	A	9							2.42	317.00			20.00		1
Cottonwood	39+94.23	58.84 LT			CB 4-1						DR-4	B	15							3.25	417.00			20.00		1
Cottonwood	40+82.25	68.27 LT			CB 4-2						DR-5	A	7							2.23	284.00		1		2.89	
Cottonwood	46+16.87	17.50 LT			CB 5-1						DR-5	A	7		1					2.19	284.00				2.89	
Cottonwood	46+16.87	28.00 RT			CB 5-2						DR-5	A	4							1.76	225.00		1			
Cottonwood	48+70.00	28.94 RT			CB 5-3						DR-6	A	5							1.91	250.00			20.00		1
Cottonwood	49+30.14	46.41 RT			CB 6-1						DR-6	A	2							1.42	192.00		1		2.89	
Cottonwood	51+45.60	32.83 LT			CB 6-2						DR-6								1							
Cottonwood	52+00.00	59.12 RT									DR-6															
Cottonwood	51+45.50	48.88 LT									DR-6														2.89	
Cottonwood	52+00.00	32.50 RT												65.00												
Cottonwood																										
TOTAL						1,921	385	50	45	447				65	3	3	2	1	2	47	6,030	3	16	160	41	3

Include in price of underdrain

RELEASE FOR CONSTRUCTION

NO.	DATE	DESCRIPTION

MURRAY CITY CORPORATION
DEPARTMENT OF PUBLIC SERVICES -- ENGINEERING DIVISION
4646 SOUTH 500 WEST, MURRAY UT, 84123 - (801) 270-2400

DESIGN CP 10/03	CHECK DTP 10/03	QA AUDIT	
DRAWN BN 10/03	CHECK DTP 10/03	DATE	
QUANT. ES 10/03	CHECK DTP 10/03	BY	

DESIGN ENGINEER — APPROVAL RECOMM. — DATE

PROJECT MANAGER — APPROVED — DATE

COTTONWOOD STREET
5600 SOUTH TO VINE STREET
SUMMARY SHEET

PROJECT NUMBER *HPP-STP-2148(1)0

SALT LAKE COUNTY

SHEET NO. SM-14

$DATE$ $TIME$ $FILES$

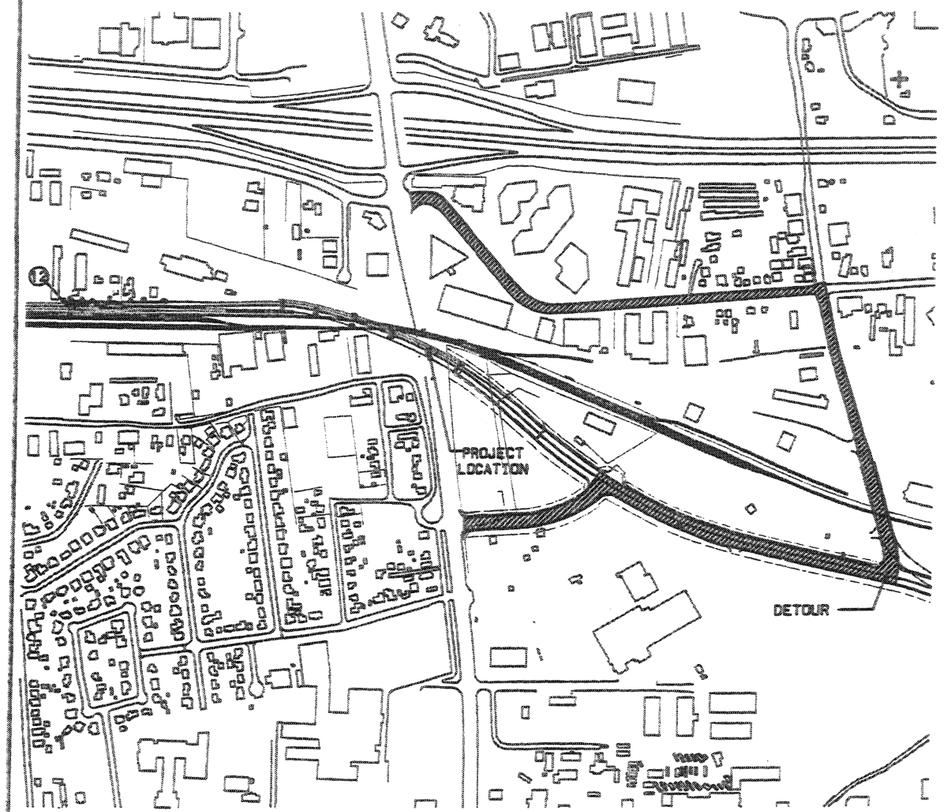

VICINITY MAP
NTS

① DETOUR M4-8 (24" x 12")
5300 SOUTH 6" SERIES D LETTERING (TYP.)
173 M6-9 21" x 21"
M5-1L 21" x 15"

② DETOUR M4-8 (24" x 12")
5300 SOUTH
173 M6-9 21" x 21"
M5-1R 21" x 15"

③ DETOUR M4-8 (24" x 12")
5300 SOUTH
173 M6-9 21" x 21"
M1-1 INTERSTATE 15
M5-1R 21" x 15"

④ DETOUR M4-8 (24" x 12")
5300 SOUTH
173 M6-9 21" x 21"
M1-1 INTERSTATE 15
M5-1L 21" x 15"

⑤
CONST. BEGINS -DATE-
USE ALT PROJECT DURATION

TWO STAGE VMS SIGN

⑥ ROAD CLOSED AHEAD
W20-3 48" x 48" MIN.

⑦ DETOUR M4-8 (24" x 12")
EAST M3-2 (24" x 12")
5300 SOUTH
173 M6-9 21" x 21"
M6-3 21" x 15"

⑧ DETOUR M4-8 (24" x 12")
WEST M3-4 (24" x 12")
5300 SOUTH
173 M6-9 21" x 21"
M1-1 INTERSTATE 15
M6-3 21" x 15"

⑨ DETOUR AHEAD
W20-2 48" x 48" MIN.

⑩ M4-10 L (48 x 18 in) TYPE III BARRICADE — DETOUR
R11-2 (48 x 30 in) TYPE III BARRICADE — ROAD CLOSED
M4-10 L (48 x 18 in) TYPE III BARRICADE — DETOUR

⑪ M4-10 R (48 x 18 in) TYPE III BARRICADE — DETOUR
R11-2 (48 x 30 in) TYPE III BARRICADE — ROAD CLOSED
M4-10 R (48 x 18 in) TYPE III BARRICADE — DETOUR

⑫ R11-4 (48 x 30 in) TYPE III BARRICADE
ROAD CLOSED TO THRU TRAFFIC
COTTONWOOD STA 25+00.00
COTTONWOOD STREET

⑬ END DETOUR
M4-8a (24 x 18 in)

5300 SOUTH DETOUR

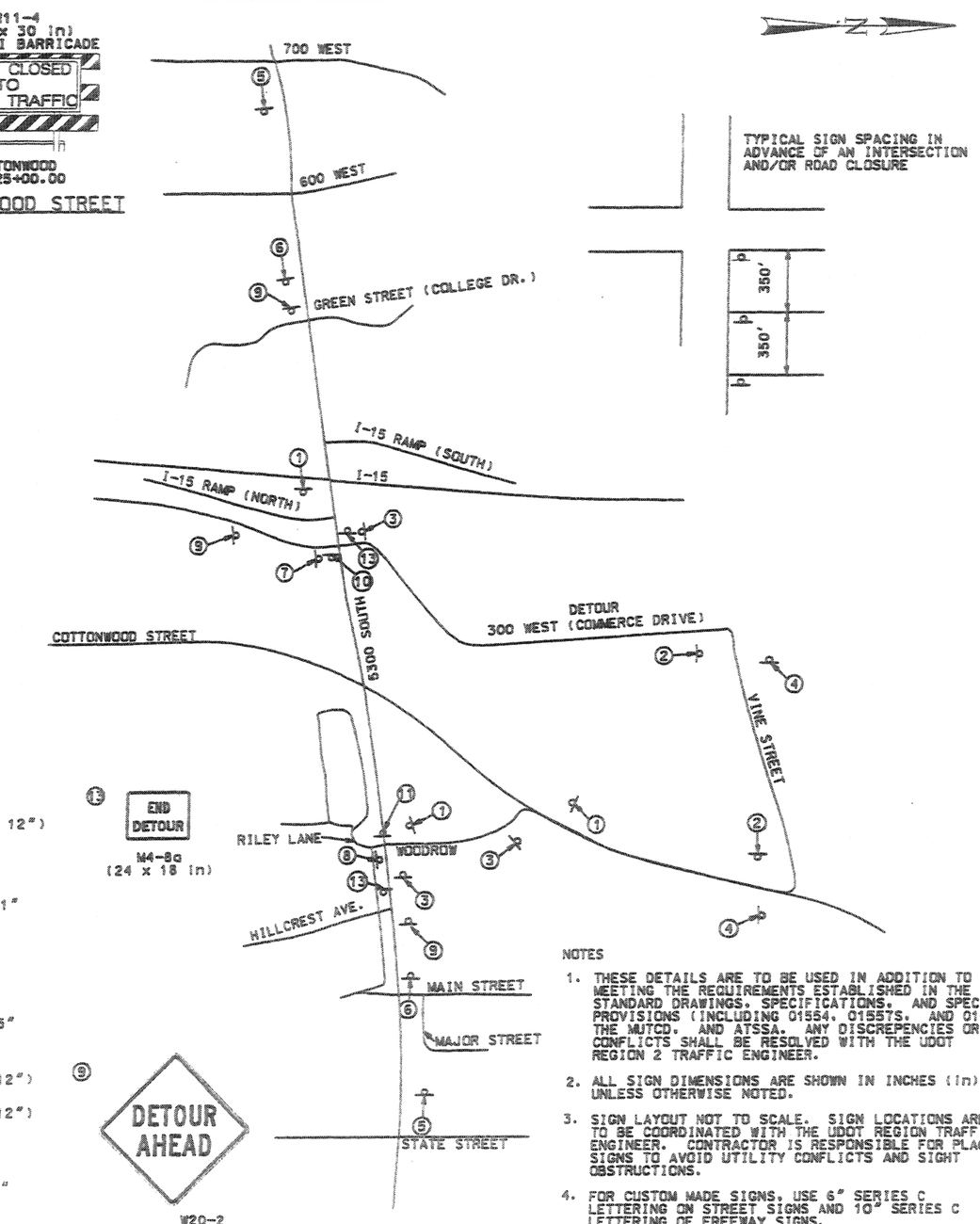

TYPICAL SIGN SPACING IN ADVANCE OF AN INTERSECTION AND/OR ROAD CLOSURE

NOTES

1. THESE DETAILS ARE TO BE USED IN ADDITION TO MEETING THE REQUIREMENTS ESTABLISHED IN THE STANDARD DRAWINGS, SPECIFICATIONS, AND SPECIAL PROVISIONS (INCLUDING 01554, 01555TS, AND 01558), THE MUTCD, AND ATSSA. ANY DISCREPENCIES OR CONFLICTS SHALL BE RESOLVED WITH THE UDOT REGION 2 TRAFFIC ENGINEER.
2. ALL SIGN DIMENSIONS ARE SHOWN IN INCHES (in) UNLESS OTHERWISE NOTED.
3. SIGN LAYOUT NOT TO SCALE. SIGN LOCATIONS ARE TO BE COORDINATED WITH THE UDOT REGION TRAFFIC ENGINEER. CONTRACTOR IS RESPONSIBLE FOR PLACING SIGNS TO AVOID UTILITY CONFLICTS AND SIGHT OBSTRUCTIONS.
4. FOR CUSTOM MADE SIGNS, USE 6" SERIES C LETTERING ON STREET SIGNS AND 10" SERIES C LETTERING OF FREEWAY SIGNS.
5. HIGHWAY SIGNS ARE TO BE INSTALLED USING STD. DWG. SN-7 THROUGH SN-12c. GROUND MOUNTED SIGN INSTALLATION DETAILS.
6. CLOSURE SIGNS APPEAR ON MOT PLANS FOR INFORMATION ONLY. THESE , OR SIMILAR, ARE TO BE INCLUDED AS PART OF THE CONTRACTOR'S TRAFFIC CONTROL PLAN.
7. ALL SIGNS SHOWN ARE BLACK LETTERING ON ORANGE BACKGROUND EXCEPT FOR ROUTE MARKERS.
8. SEE SPECIAL PROVISIONS SECTION 00555M FOR CLOSURE LIMITATIONS.

RELEASE FOR CONSTRUCTION

NO.	DATE	DESCRIPTION

MURRAY CITY CORPORATION
DEPARTMENT OF PUBLIC SERVICES -- ENGINEERING DIVISION
4646 SOUTH 500 WEST, MURRAY UT, 84123 - (801) 270-2400

DESIGN ENS 11-03 | CHECK DJP 11-03 | QA AUDIT
DRAWN ENS 11-03 | CHECK DJP 11-03 | DATE
QUANT. | CHECK | BY

APPROVAL RECOMM. | DATE | DESIGN ENGINEER
APPROVED | DATE | PROJECT MANAGER

COTTONWOOD STREET
5600 SOUTH TO VINE STREET
5300 SOUTH DETOUR

PROJECT NUMBER *HPP-STP-2148(1)0

SALT LAKE COUNTY

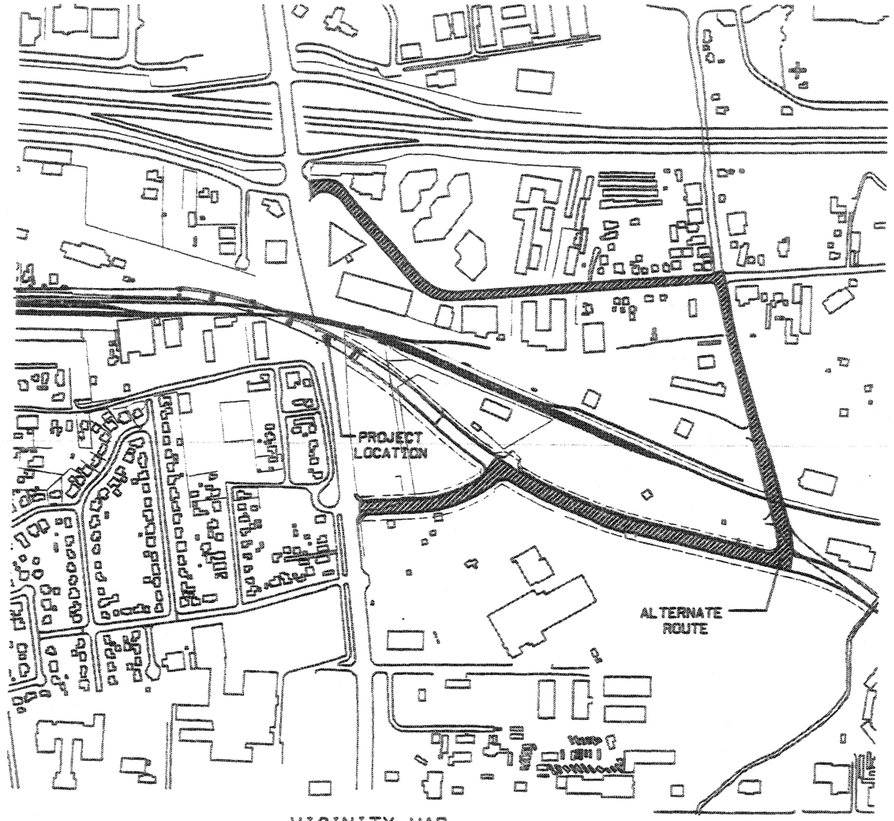

VICINITY MAP
NTS

① ALT M4-1a
5300 SOUTH 6" SERIES D LETTERING (TYP.)
173 M6-9 21" x 21"
M5-1L 21" x 15"

② ALT M4-1a
5300 SOUTH
173 M6-9 21" x 21"
M5-1R 21" x 15"

③ ALT M4-1a
5300 SOUTH
173 M6-9 21" x 21"
M1-1 INTERSTATE 15
M5-1R 21" x 15"

④ ALT M4-1a
5300 SOUTH
173 M6-9 21" x 21"
M1-1 INTERSTATE 15
M5-1L 21" x 15"

⑤
CONST. BEGINS -DATE-
USE ALT PROJECT DURATION
TWO SERIES VARIABLE MESSAGE BOARD

⑥
CONSTRUCTION 5300 SOUTH 100 WEST TO 300 WEST USE ALT ROUTE BUSINESS ACCESSES OPEN
APPROX. 52" x 62"
6" SERIES C LETTERING

⑦ ALT M4-1a
EAST M3-2 (24" x 12")
5300 SOUTH
173 M6-9 21" x 21"
M6-3 21" x 15"

⑧ ALT M4-1a
WEST M3-4 (24" x 12")
5300 SOUTH
173 M6-9 21" x 21"
M1-1 INTERSTATE 15
M6-3 21" x 15"

⑨
END ROAD WORK
G20-2a (36" X 18")

5300 SOUTH ALTERNATE ROUTE

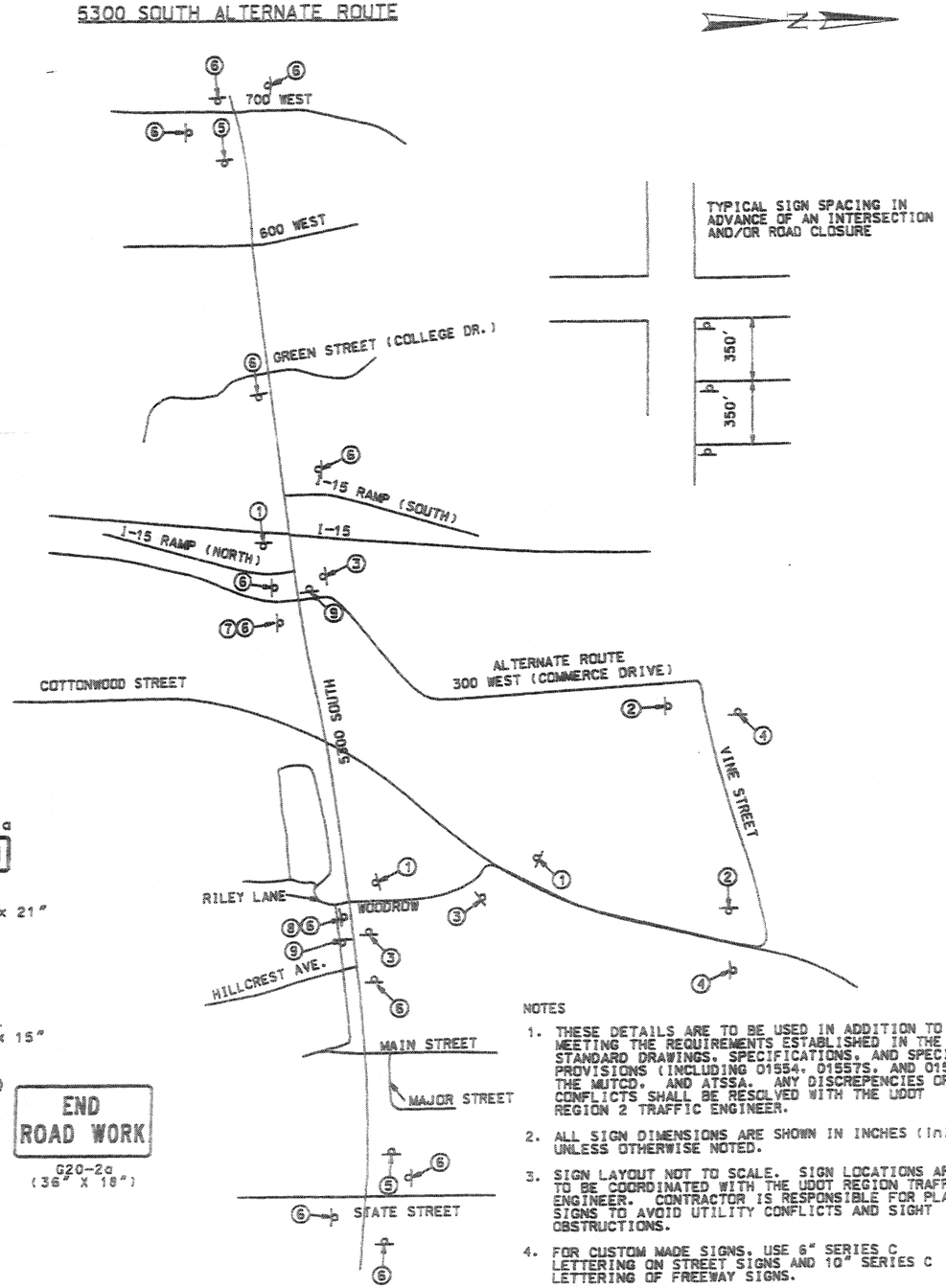

TYPICAL SIGN SPACING IN ADVANCE OF AN INTERSECTION AND/OR ROAD CLOSURE

NOTES

1. THESE DETAILS ARE TO BE USED IN ADDITION TO MEETING THE REQUIREMENTS ESTABLISHED IN THE STANDARD DRAWINGS, SPECIFICATIONS, AND SPECIAL PROVISIONS (INCLUDING 01554, 01557S, AND 01558). THE MUTCD, AND ATSSA. ANY DISCREPENCIES OR CONFLICTS SHALL BE RESOLVED WITH THE UDOT REGION 2 TRAFFIC ENGINEER.
2. ALL SIGN DIMENSIONS ARE SHOWN IN INCHES (in) UNLESS OTHERWISE NOTED.
3. SIGN LAYOUT NOT TO SCALE. SIGN LOCATIONS ARE TO BE COORDINATED WITH THE UDOT REGION TRAFFIC ENGINEER. CONTRACTOR IS RESPONSIBLE FOR PLACING SIGNS TO AVOID UTILITY CONFLICTS AND SIGHT OBSTRUCTIONS.
4. FOR CUSTOM MADE SIGNS, USE 6" SERIES C LETTERING ON STREET SIGNS AND 10" SERIES C LETTERING OF FREEWAY SIGNS.

   HIGHWAY SIGNS ARE TO BE INSTALLED USING STD. DWG. SN-7 THROUGH SN12C. GROUND MOUNTED SIGN INSTALLATION DETAILS.
6. CLOSURE SIGNS APPEAR ON MOT PLANS FOR INFORMATION ONLY. THESE , OR SIMILAR, ARE TO BE INCLUDED AS PART OF THE CONTRACTOR'S TRAFFIC CONTROL PLAN.
7. ALL SIGNS SHOWN ARE BLACK LETTERING ON ORANGE BACKGROUND, EXCEPT FOR ROUTE MARKERS.

RELEASE FOR CONSTRUCTION

NO.	DATE	DESCRIPTION

MURRAY CITY
DEPARTMENT OF PUBLIC SERVICES - ENGINEERING DIVISION
4646 SOUTH 500 WEST, MURRAY UT, 84123 - (801) 270-2400

DESIGN	ERS	11-03	CHECK	DTP	11-03
DRAWN	ERS	11-03	CHECK	DTP	11-03
QUANT.			CHECK		

QA AUDIT
DATE
BY

APPROVAL RECOMM. — DESIGN ENGINEER — DATE
APPROVED — PROJECT MANAGER — DATE

COTTONWOOD STREET
5600 SOUTH TO VINE STREET
5300 SOUTH ALTERNATE ROUTE

PROJECT NUMBER *HPP-STP-2148(1)0

SALT LAKE COUNTY

SHEET NO. M-23

&DATES &TIMES

&FILES

CURVE TABLE			
CURVE NO.	CURVE CENTER		TBC RADIUS
	STATION	OFFSET	
(1A)	25+27.53	53.50 LT	25.00
	STA.	OFFSET	ELEV.
PC(TBC)	25+02.53	53.50 LT	4316.86
PT(TBC)	25+27.52	28.50 LT	4316.64

STA. 24+96.00
53.50 LT
MATCH EXISTING ASPHALT
ELEV. 4316.62

CONCRETE CURB AND GUTTER TYPE B1 REQ'D
25+00.03 53.50 LT (PC) TO
25+27.52 26.00 LT (PT) TO
28+57.34 26.00 LT

PEDESTRIAN ACCESS RAMP TYPE E, REQ'D
25+08.08 34.07 LT.
CONTROL AT ℄ RAMP LIP OF GUTTER

25+66.30 ℄ DRIVEWAY W= 12'
CONCRETE DRIVEWAY FLARED. 6 INCH THICK REQ'D
6" UNTREATED BASE COURSE
¾ INCH OR 1 INCH MAX REQ'D
(38.50 LT TO 48.28 LT)

26+18.78 ℄ DRIVEWAY W= 12'
CONCRETE DRIVEWAY FLARED. 7 INCH THICK REQ'D
3" HMA-¾ INCH REQ'D
6" UNTREATED BASE COURSE
¾ INCH OR 1 INCH MAX REQ'D
(38.50 LT TO 42.10 LT)

CONCRETE PATTERNED/COLORED FLATWORK
4 INCH THICK REQ'D
27+15.25 BEGIN 3.0 WIDE 31.50 LT
27+97.42 END 3.0 WIDE 31.50 LT

CONCRETE SIDEWALK REQ'D (4" THICK)
25+12.53 (PC) BEGIN 53.50 LT
25+27.52 (PI) 38.50 LT
26+50.00 (PI) 38.50 LT
26+98.37 (PI) 41.50 LT
28+66.87 END 41.50 LT

27+04.44 ℄ DRIVEWAY W= 12'
CONCRETE DRIVEWAY FLARED. 7 INCH THICK REQ'D
3" HMA-¾ INCH REQ'D
6" UNTREATED BASE COURSE
¾ INCH OR 1 INCH MAX REQ'D
(41.45 LT TO 55.60 LT)

CONCRETE FLATWORK 7 INCH THICK REQ'D
28+84.97 41.50 LT TO
29+00.00 41.50 LT

CONCRETE PATTERNED/COLORED FLATWORK
7 INCH THICK REQ'D
28+19.45 BEGIN 3.0 WIDE 31.5 LT
28+61.42 3.0 WIDE 31.5 LT

28+09.43 ℄ DRIVEWAY W = 12'
CONCRETE DRIVEWAY FLARED. 6 INCH THICK REQ'D
CONCRETE FLATWORK 6 INCH THICK REQ'D
(41.50 LT TO 47.18 LT)

28+75.74 ℄ DRIVEWAY W = 16'
CONCRETE DRIVEWAY FLARED. 7 INCH THICK REQ'D
6" UNTREATED BASE COURSE
¾ INCH OR 1 INCH MAX REQ'D
(41.50 LT TO 53.50 LT)

CONCRETE PATTERNED/COLORED FLATWORK
7 INCH THICK REQ'D
28+89.05 BEGIN 3.0 WIDE 31.5 LT
28+97.17 END 3.0 WIDE 31.5 LT

(1A) SEE CURVE TABLE THIS SHEET

5564 5540 5534

24+00 25+00 26+00 27+00 28+00

5590 SOUTH

RIGHT OF WAY LINE
TEMPORARY CONSTRUCTION EASEMENT
7" FLATWORK
CONCRETE PATTERNED /COLORED FLATWORK 7" THICK
CONCRETE SIDEWALK
CONCRETE PATTERNED/COLORED FLATWORK 4" THICK
CONCRETE CURB AND GUTTER TYPE B1
FILL
Existing right of way
ASPHALT PAVEMENT SAWING
26.0
20.0
20.3:1
Existing right of way line
EDGE OF NEW ASPHALT PAVEMENT

STA. 24+96.00
BEGIN CONSTRUCTION
COTTONWOOD ST.
N. 844147.709
E. 1889687.952

COTTONWOOD STREET
N 0°45'10.25"E
R=10000.00 ①

MATCHLINE STA. 29+00
SEE SHEET RD-2

54+00 SB 1356+00 SB 1358+00 NB 354+00 NB 356+00 17+00 18+00 19+00 20+00 21+00

UTA FENCE TO REMAIN IN PLACE / NO CONSTRUCTION / WILL BE ALLOWED BEYOND FENCE

PRECAST CONCRETE BARRIER

STA. 24+02.31 13.81' RT.
MATCH EXISTING ASPHALT
ELEV. 4316.23

STA. 24+83.26 16.00 RT
MATCH EXISTING
PRECAST CONCRETE BARRIER
BEGIN TAPER

PRECAST CONCRETE BARRIER TO STA BARRIER IN CONNECTION

STA. 24+96.00
BEGIN TYPICAL SECTION NO. 1
13.63' RT. MATCH EXISTING
ASPHALT
ELEV. 4316.26

STA. 25+64.40 20.00 RT
END TAPER

STA. 26+04.00
END TYPICAL SECTION NO. 2
BEGIN TYPICAL SECTION NO. 1

PC
Sta 26+53.22

PRECAST CONCRETE BARRIER REQ'D
24+83.26 BEGIN 16.00 RT TO
25+64.40 20.00 RT TO
29+00.00 20.00 RT
(DO NOT PUT SCUPPERS IN BARRIER)

40 20 0 40

mzp-nad83
10000.00
05°32.92" LT
368.12
184.08
28+37.30
844488.979
1889692.437

NOTES:

1. ALL DIMENSIONS ARE IN FEET UNLESS NOTED OTHERWISE.
2. FOR ROW/EASMENT DIMENSIONS SEE ROW SHEETS. AND SHEET 1H FOR ROW ALIGNMENT.
3. CURB AND GUTTER STATION AND OFFSET MEASURED FROM LIP OF GUTTER.
4. SIDEWALK STATION AND OFFSET MEASURED FROM BACK OF WALK.
5. CONCRETE COLORED/PATTERNED FLATWORK STATION AND OFFSET MEASURED FROM BACK OF SURFACE.
6. TAPER CALLOUTS ARE TO TRAFFIC FACE OF BARRIER.

RELEASE FOR CONSTRUCTION

NO.	DATE	DESCRIPTION

MURRAY CITY CORPORATION
DEPARTMENT OF PUBLIC SERVICES -- ENGINEERING DIVISION
4646 SOUTH 500 WEST, MURRAY UT. 84123 - (801) 270-2400

DESIGN RTP 8/03	CHECK DTP 9/03	QA AUDIT
DRAWN CMM 8/03	CHECK DTP 9/03	DATE
QUANT. ES 9/03	CHECK DTP 10/03	BY

APPROVAL RECOMM. DATE DESIGN ENGINEER
APPROVED DATE PROJECT MANAGER

COTTONWOOD STREET
5600 SOUTH TO VINE STREET
ROADWAY PLAN

PROJECT NUMBER *HPP-STP-2148(110)

SALT LAKE COUNTY

$FILES$ $DATE$ $TIME$

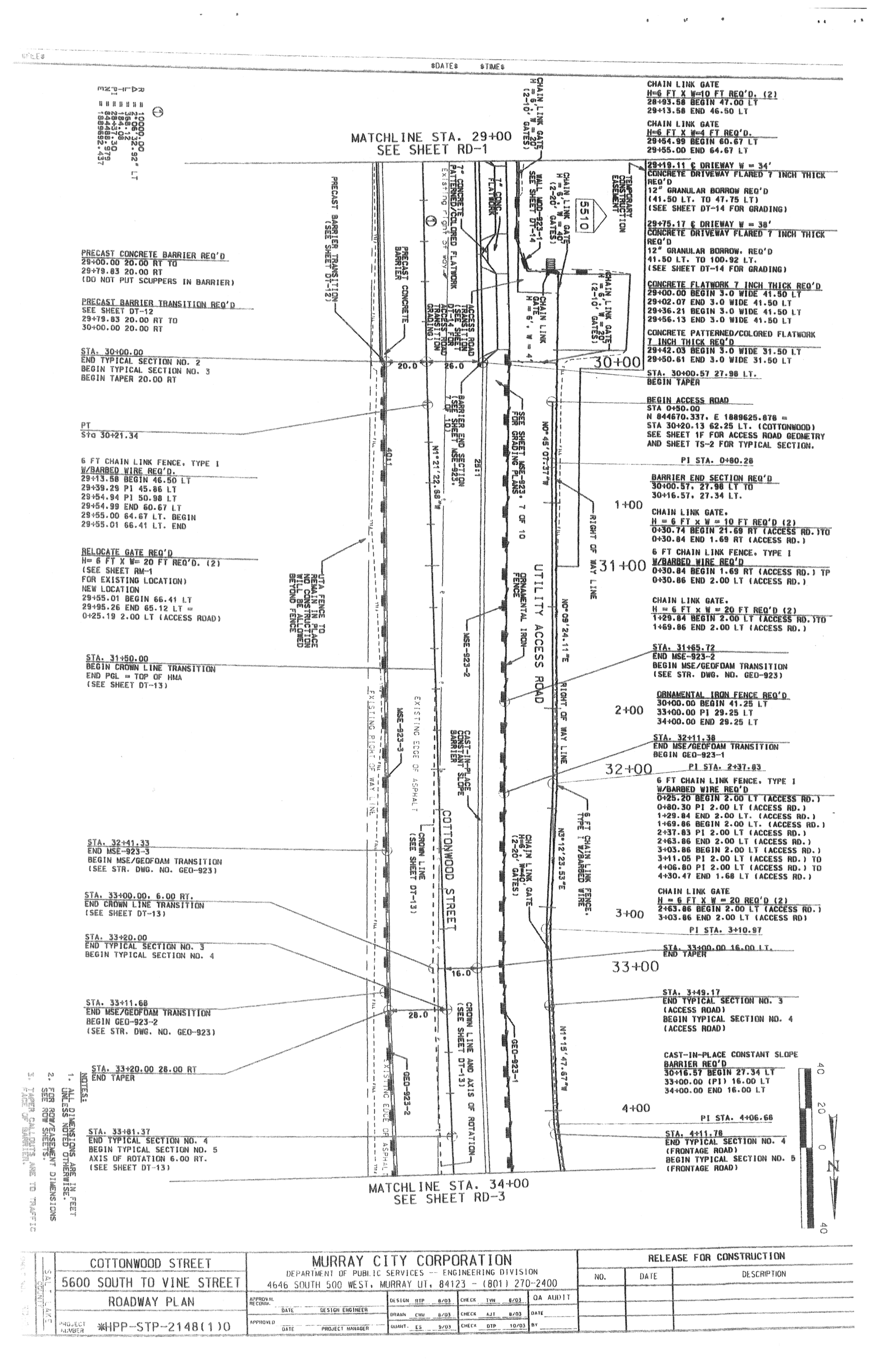

NOTES:
1. ALL DIMENSIONS ARE IN FEET UNLESS NOTED OTHERWISE.
2. FOR ROW/EASEMENT DIMENSIONS SEE ROW SHEETS.
3. TAPER CALLOUTS ARE TO TRAFFIC FACE OF BARRIER.

COTTONWOOD STREET 5600 SOUTH TO VINE STREET ROADWAY PLAN PROJECT NUMBER *HPP-STP-2148(1)0	MURRAY CITY CORPORATION DEPARTMENT OF PUBLIC SERVICES -- ENGINEERING DIVISION 4646 SOUTH 500 WEST, MURRAY UT, 84123 - (801) 270-2400 APPROVAL RECOMM. DATE DESIGN ENGINEER APPROVED DATE PROJECT MANAGER DESIGN RTP 8/03 CHECK TWN 8/03 QA AUDIT DRAWN CMW 8/03 CHECK AJT 8/03 DATE QUANT. ES 9/03 CHECK DTP 10/03 BY	RELEASE FOR CONSTRUCTION NO. DATE DESCRIPTION

SALT LAKE COUNTY

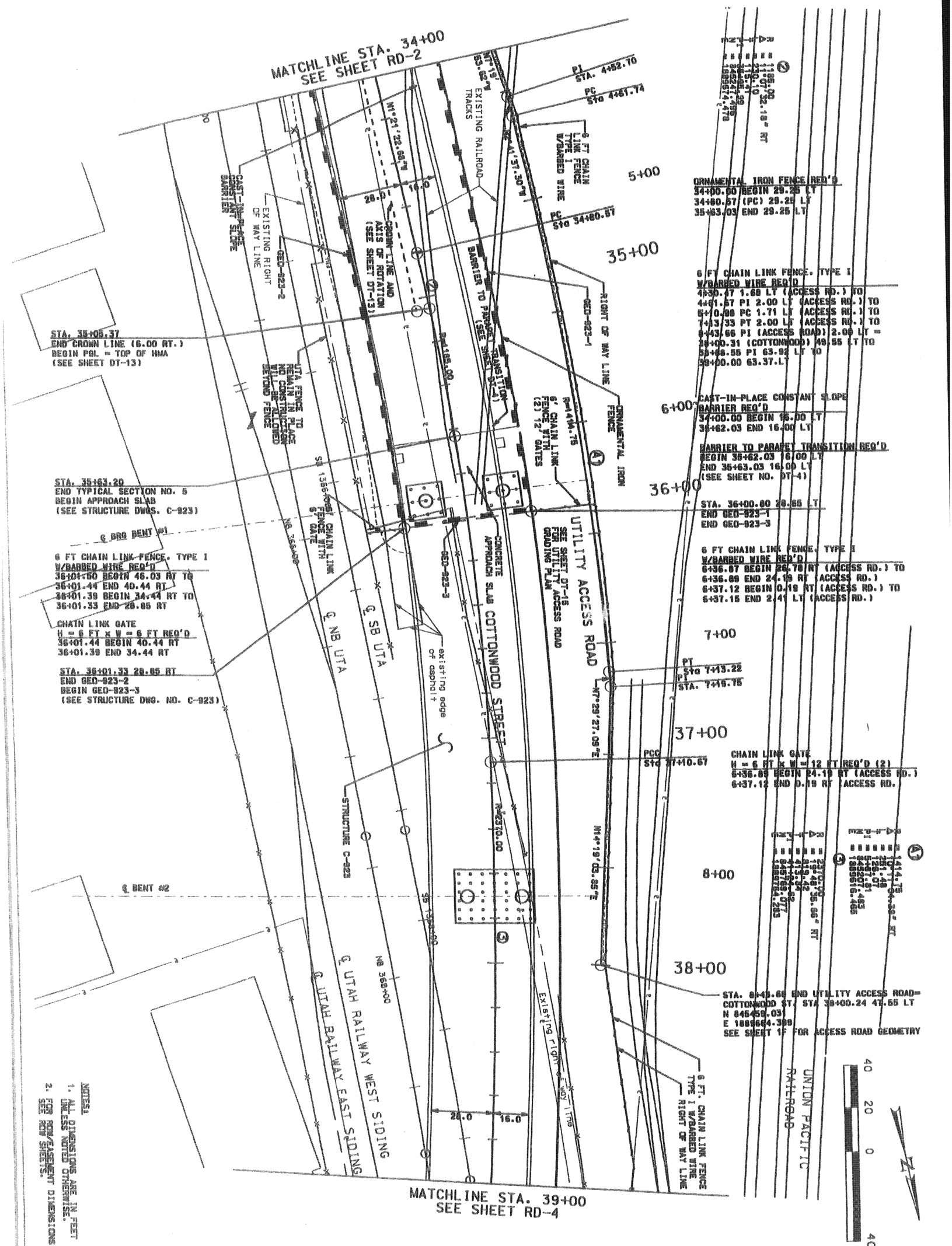

NOTES:
1. ALL DIMENSIONS ARE IN FEET UNLESS NOTED OTHERWISE.
2. FOR ROW/EASEMENT DIMENSIONS SEE ROW/EASEMENT SHEETS.

SHEET NO. RD-3

SALT LAKE COUNTY

COTTONWOOD STREET
5600 SOUTH TO VINE STREET
ROADWAY PLAN

PROJECT NUMBER *HPP-STP-2148(1)0

MURRAY CITY CORPORATION
DEPARTMENT OF PUBLIC SERVICES — ENGINEERING DIVISION
4646 SOUTH 500 WEST, MURRAY UT, 84123 - (801) 270-2400

APPROVAL RECOMM. _____ DATE _____ DESIGN ENGINEER
APPROVED _____ DATE _____ PROJECT MANAGER

DESIGN RTP 9/03	CHECK TVN 9/03	QA AUDIT	
DRAWN CMW 9/03	CHECK AJT 9/03	DATE	
QUANT. ES 9/03	CHECK DTP 10/03	BY	

RELEASE FOR CONSTRUCTION

NO.	DATE	DESCRIPTION

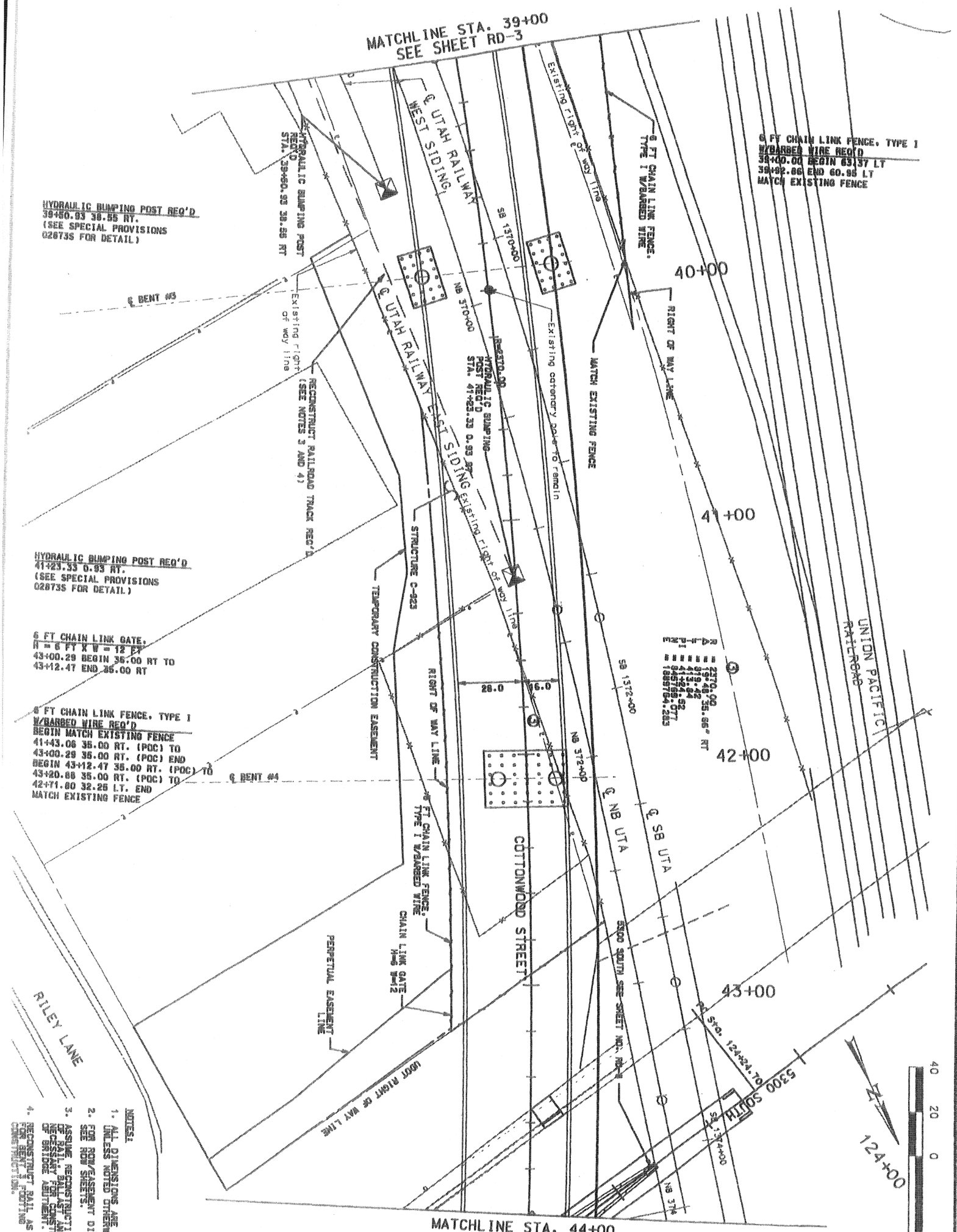

NOTES:

1. ALL DIMENSIONS ARE IN FEET UNLESS NOTED OTHERWISE.
2. FOR ROW/EASEMENT DIMENSIONS SEE ROW SHEETS.
3. ASSUME RECONSTRUCTION OF 39' OF RAILROAD TRACK IS NECESSARY FOR CONSTRUCTION OF BRIDGE ABUTMENTS.
4. RECONSTRUCT RAIL AS NECESSARY FOR BENT 3 FOOTING CONSTRUCTION.

SALT LAKE COUNTY	COTTONWOOD STREET 5600 SOUTH TO VINE STREET ROADWAY PLAN	MURRAY CITY CORPORATION DEPARTMENT OF PUBLIC SERVICES — ENGINEERING DIVISION 4646 SOUTH 500 WEST, MURRAY UT. 84123 - (801) 270-2400				RELEASE FOR CONSTRUCTION	
	PROJECT NUMBER *HPP-STP-2148(1)0	APPROVAL RECOMM. _____ DATE DESIGN ENGINEER APPROVED _____ DATE PROJECT MANAGER	DESIGN RTP 8/03 DRAWN CMH 8/03 QUANT. ES 8/03	CHECK TVN 8/03 CHECK AJT 8/03 CHECK DTP 10/03	QA AUDIT DATE BY	NO. / DATE / DESCRIPTION	

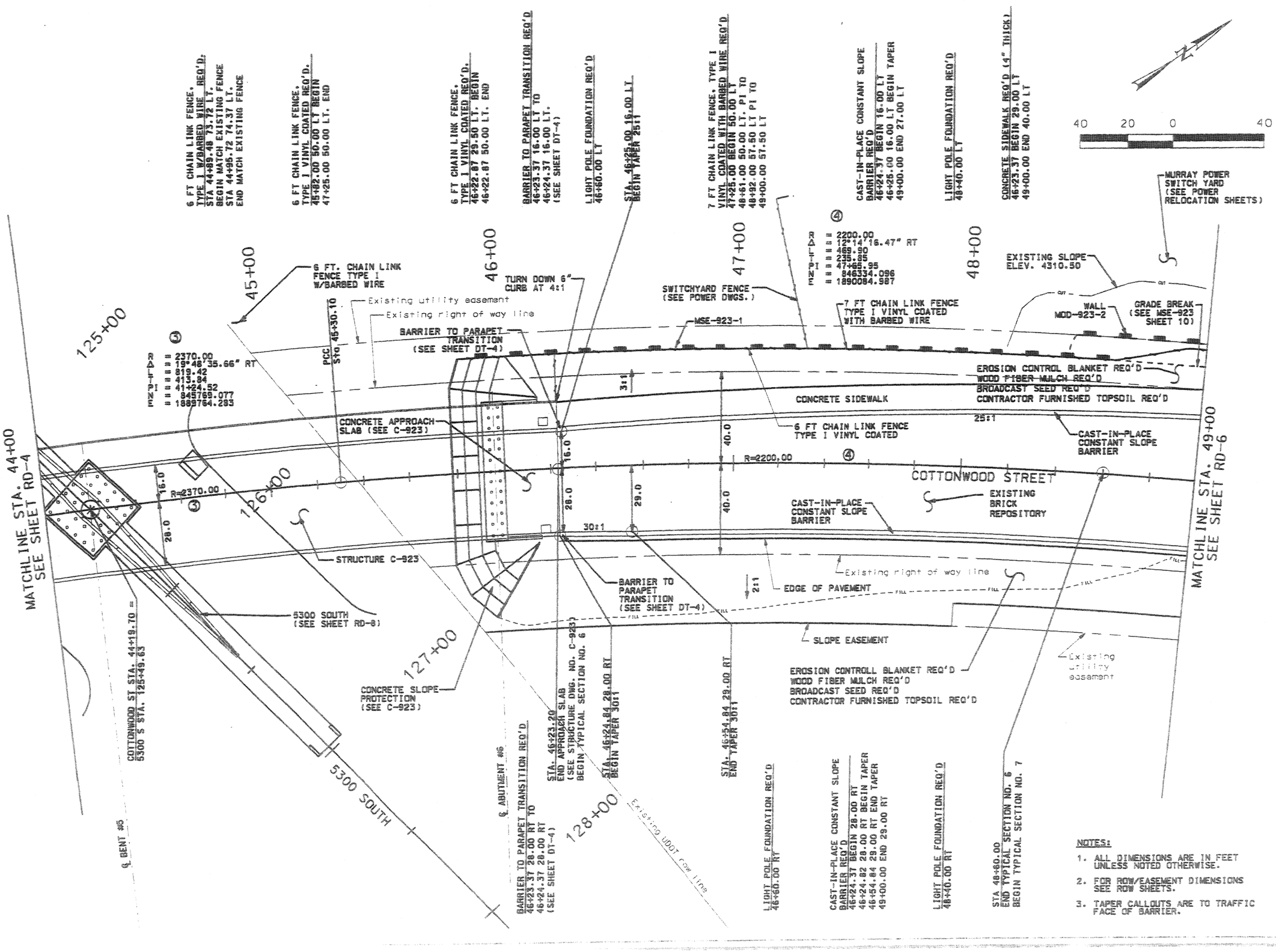

NOTES:

1. ALL DIMENSIONS ARE IN FEET UNLESS NOTED OTHERWISE.
2. FOR ROW/EASEMENT DIMENSIONS SEE ROW SHEETS.
3. TAPER CALLOUTS ARE TO TRAFFIC FACE OF BARRIER.

RELEASE FOR CONSTRUCTION

NO.	DATE	DESCRIPTION

MURRAY CITY CORPORATION
DEPARTMENT OF PUBLIC SERVICES -- ENGINEERING DIVISION
4646 SOUTH 500 WEST, MURRAY UT. 84123 -- (801) 270-2400

DESIGN RTP 8/03	CHECK TWN 8/03	QA AUDIT	
DRAWN CRW 8/03	CHECK AJT 8/03	DATE	
QUANT. ES 9/03	CHECK DTP 10/03	BY	

APPROVAL RECOMM. — DATE — DESIGN ENGINEER
APPROVED — DATE — PROJECT MANAGER

COTTONWOOD STREET
5600 SOUTH TO VINE STREET
ROADWAY PLAN

PROJECT NUMBER *IPP-STP-2148(110

SALT LAKE COUNTY

SHEET NO. RD-5

$DATE$ $TIME$

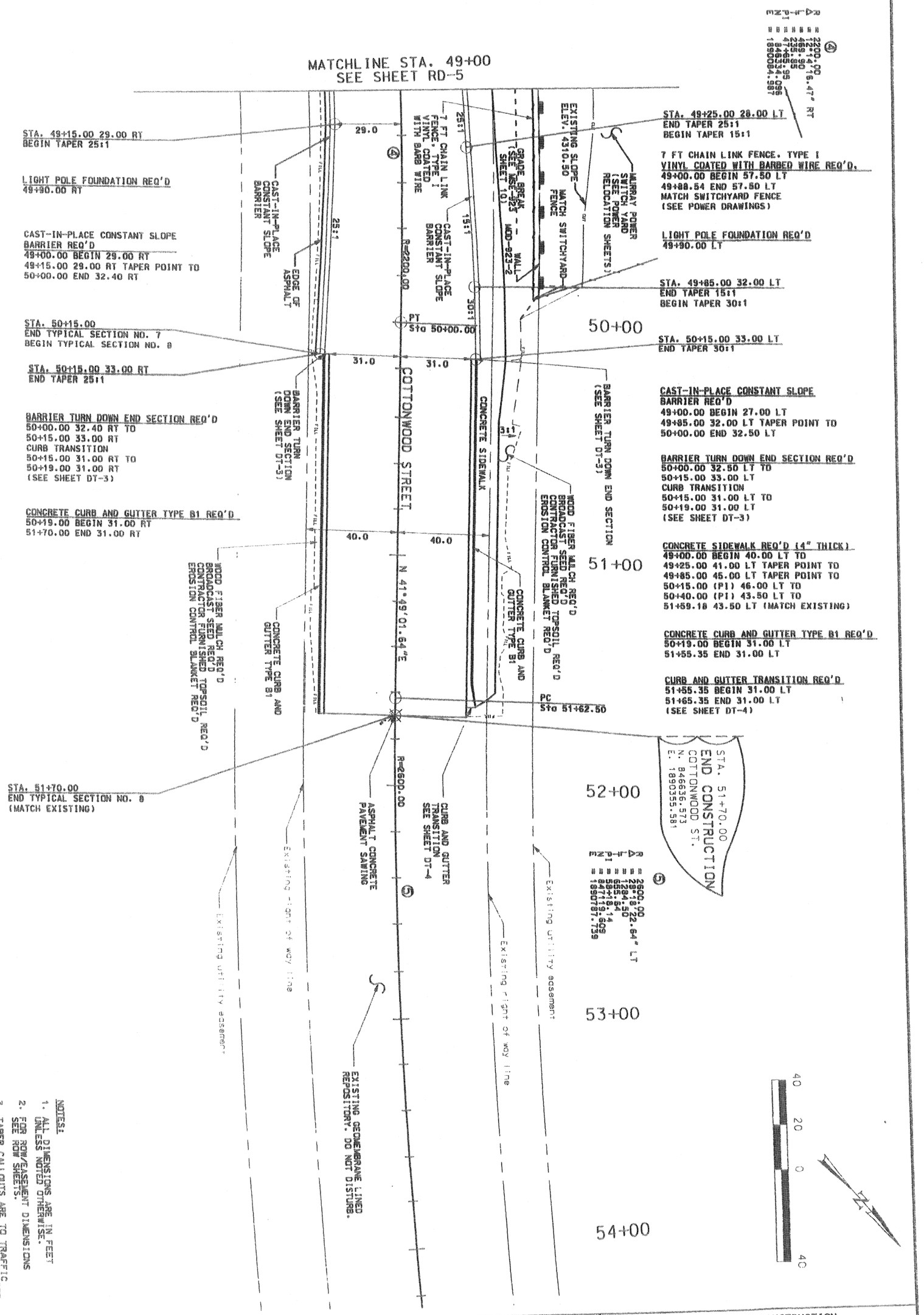

NOTES:

1. ALL DIMENSIONS ARE IN FEET UNLESS NOTED OTHERWISE.
2. FOR ROW/EASEMENT DIMENSIONS SEE ROW SHEETS.
3. TAPER CALLOUTS ARE TO TRAFFIC FACE OF CURB AND GUTTER. SIDEWALK CALLOUTS ARE TO BACK OF SIDEWALK.

COTTONWOOD STREET	MURRAY CITY CORPORATION					RELEASE FOR CONSTRUCTION	
5600 SOUTH TO VINE STREET	DEPARTMENT OF PUBLIC SERVICES — ENGINEERING DIVISION					NO.	DATE / DESCRIPTION
ROADWAY PLAN	4646 SOUTH 500 WEST, MURRAY UT, 84123 - (801) 270-2400						
PROJECT NUMBER *HPP-STP-2148(1)0	APPROVAL RECOMM. DATE DESIGN ENGINEER	DESIGN RTP 8/03	CHECK TWH 8/03	QA AUDIT			
	APPROVED DATE PROJECT MANAGER	DRAWN CMW 8/03	CHECK AJT 8/03	DATE			
		QUANT. ES 9/03	CHECK DTP 10/03	BY			

SALT LAKE COUNTY

STA. 86+50.00
BEGIN CONSTRUCTION
VINE ST.
N. 849307.921
E. 1892113.920

STA. 91+10.00
END CONSTRUCTION
VINE ST.
N. 849304.757
E. 1892573.909

86+00 87+00 88+00 89+00 90+00 91+00

CONCRETE CURB TYPE M2 REQ'D (2 BACK TO BACK)
86+65.20 BEGIN CURB BACK TO BACK 7.28 RT
87+15.14 ANGLE PI, 7.28 RT
87+43.96 ANGLE PI, 1.44 LT
89+48.21 END CURB BACK TO BACK 1.44 LT

PLOWABLE END SECTION REQ'D
89+48.21 BEGIN 1.44 LT
89+54.21 END 1.44 LT

40 20 0 40

N

CONCRETE CURB TYPE M2 (BACK TO BACK)

ASPHALT PAVEMENT SAWING AT FACE OF EXISTING CURB

S 89°36'21.18" E

VINE STREET

STATE STREET

ASPHALT PAVEMENT SAWING AT FACE OF EXISTING CURB

ASPHALT PAVEMENT SAWING AT FACE OF EXISTING PLANTER BOX

PLOWABLE END SECTION REQ'D
86+49.20 BEGIN 7.28 RT
86+65.20 END 7.28 RT

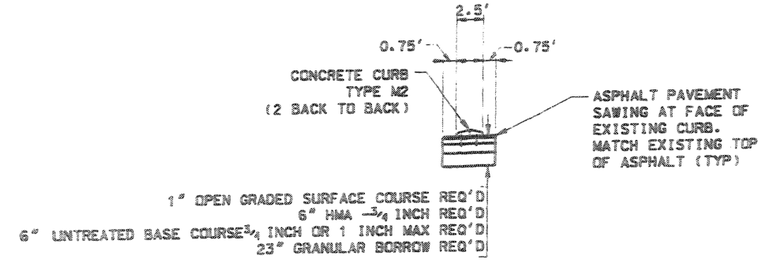

SECTION A-A

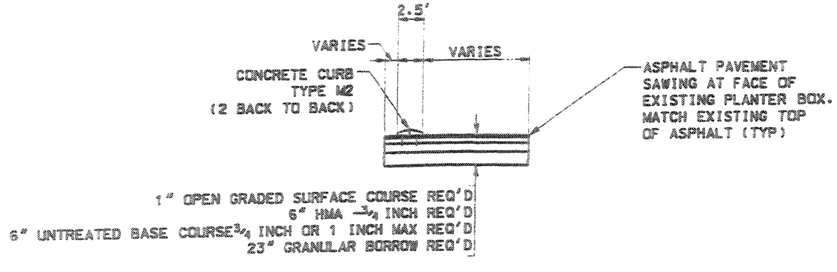

SECTION B-B

NOTES:

1. ALL DIMENSIONS ARE IN FEET UNLESS NOTED OTHERWISE.
2. PLOWABLE END SECTION STATION AND OFFSET ARE AT CENTERLINE.
3. M2 CURB STATION AND OFFSET ARE AT BACK OF CURB.

RELEASE FOR CONSTRUCTION

NO.	DATE	DESCRIPTION

MURRAY CITY CORPORATION
DEPARTMENT OF PUBLIC SERVICES -- ENGINEERING DIVISION
4646 SOUTH 500 WEST, MURRAY UT, 84123 - (801) 270-2400

DESIGN RTP 8/03	CHECK TVN 8/03	QA AUDIT	
DRAWN CHM 8/03	CHECK AJT 8/03	DATE	
QUANT. ES 9/03	CHECK DTP 10/03	BY	

APPROVAL RECOMMENDED — DATE — DESIGN ENGINEER
APPROVED — DATE — PROJECT MANAGER

COTTONWOOD STREET
5600 SOUTH TO VINE STREET
ROADWAY PLAN
PROJECT NUMBER *HPP-STP-2148(1)0

SALT LAKE COUNTY

SHEET NO. 30

$TIME$ $DATE$ $FILE$

20 10 0 20

N

℄ SB UTA

℄ NB UTA

45+00

125+00

126+00

127+00

MODIFIED FLOWABLE END SECTION REQ'D
124+31.81 7.23 LT TO 124+37.81 7.24 LT

PRECAST CONCRETE BARRIER (HALF SECTION) REQ'D
SEE UDOT STD DWG BA 2
124+85.24 2.11 LT TO 125+49.60 5.75 LT
2 SECTIONS @ 20 FT LENGTHS
2 SECTIONS @ 12 FT LENGTHS
(SEE NOTE 2)

CONCRETE CURB AND GUTTER TYPE 81 REQ'D
CONCRETE SIDEWALK REQ'D (4" THICK)
125+83.95 43.60 LT TO 126+08.62 43.84 LT

ASPHALT PAVEMENT SAWING (TYP)

5300 S STA 125+49.63 =
CENTERWOOD STA. 44+19.70
BENT 5 COLUMN (STR C-923)

5300-1
PI=1+23
5729.60
44°55.82" RT
575.98
287.74
127+12.44
946070.477
1890074.478

R=2370.00

R-427A

Existing sidewalk

Existing curb and gutter

PRECAST CONCRETE BARRIER (HALF SECTION) REQ'D
SEE UDOT STD DWG BA 2
125+49.85 5.75 LT TO 126+29.77 1.31 LT
4 SECTIONS @ 20 FT LENGTHS
(SEE NOTE 2)

MODIFIED FLOWABLE END SECTION REQ'D
126+91.70 7.41 LT TO 126+97.69 7.49 LT

126+97.69
7.49 LT

B (SEE DT-1)

CONCRETE FLATWORK
UNTREATED BASE COURSE
GRANULAR BORROW

A (SEE DT-1)

125+65.15
7.20 LT
16.41 LT

5300 SOUTH

18:1

20:1

MODIFIED FLOWABLE END SECTION (SEE SHEET DT-4)

126+97.69
6.25 RT

MATCH EXIST. CURB AND MEDIAN (TYP)

B (SEE DT-1)

125+33.69
7.17 LT
15.24 LT

BARRIER TRANSITION (SEE SHEET DT-1)

STA 124+79.17 1.61 LT
FACE OF BARRIER TRANSITION AT END

FORM TYPE B3 CURB BETWEEN UTA PIER AND BARRIER TRANSITION

5300-1
R=6729.60

EXPANSION AND CONTRACTION JOINTS FOR CONCRETE FLATWORK (SEE UDOT STD. DWG. GW 4)

125+66.03
6.56 RT
14.57 RT

B (SEE DT-1)

18:1

GRADE TO DRAIN

124+31.81
7.23 LT

GRADE TO DRAIN

125+34.65
6.67 RT
15.74 RT

PLACE 3" EXPANDED POLYSTYRENE AROUND COLUMN

STA 124+79.17 1.23 RT
FACE OF BARRIER TRANSITION AT END

(SEE DT-1)

B

A (SEE DT-1)

MODIFIED FLOWABLE END SECTION (SEE SHEET DT-4)

EXISTING UTA BRIDGE PIER.

124+31.81
6.38 RT

PC 124+24.70

MODIFIED FLOWABLE END-SECTION REQ'D
124+31.81 6.38 RT TO 124+37.81 6.41 RT

BARRIER TRANSITION REQ'D
(SEE SHEET DT-1)
STA 124+79.17 TO STA 125+85.09

PRECAST CONCRETE BARRIER (HALF SECTION) REQ'D
SEE UDOT STD DWG BA 2
124+85.07 1.72 RT TO 125+49.51 5.28 RT
2 SECTIONS @ 20 FT LENGTHS
2 SECTIONS @ 12 FT LENGTHS
(SEE NOTE 2)

CONCRETE CURB AND GUTTER TYPE 81 REQ'D
CONCRETE SIDEWALK REQ'D (4" THICK)
124+88.55 43.40 RT TO 126+08.62 43.49 RT

COTTONWOOD STREET

R-427B

CONCRETE FLATWORK 4" THICK REQ'D
3" UNTREATED BASE COURSE 3/4 INCH OR 1 INCH MAX REQ'D
25" GRANULAR BORROW REQ'D
BETWEEN PRECAST CONCRETE BARRIER (HALF SECTIONS)
STA 124+85.07 TO STA 126+29.77

PRECAST CONCRETE BARRIER (HALF SECTION) REQ'D
SEE UDOT STD DWG BA 2
125+49.81 5.28 RT TO 126+29.76 1.25 RT
4 SECTIONS @ 20 FT LENGTHS
(SEE NOTE 2)

CRASH CUSHION TYPE G REQ'D
DESIGN SPEED 45 MPH
126+29.76

MODIFIED FLOWABLE END SECTION REQ'D
126+91.69 6.33 RT TO 126+97.69 6.25 RT

Existing curb and gutter

Existing sidewalk

NOTES:

1. ALL DIMENSIONS ARE IN FEET UNLESS NOTED OTHERWISE.
2. STABILIZATION PINS ARE REQUIRED FOR PRECAST CONCRETE BARRIER (HALF SECTION). PLACE 2 PINS PER SECTION IN CENTER OF BARRIER AT 3'-6" FROM ENDS. SEE STD DWG BA 1A FOR DETAILS. DO NOT PUT SCUPPERS IN BARRIER.
3. CALLOUTS MEASURED TO FRONT FACE OF BARRIER AND FLOWABLE END SECTION. TO TBC AND FRONT OF SIDEWALK.

RELEASE FOR CONSTRUCTION

NO.	DATE	DESCRIPTION

MURRAY CITY CORPORATION
DEPARTMENT OF PUBLIC SERVICES — ENGINEERING DIVISION
4646 SOUTH 500 WEST, MURRAY UT, 84123 - (801) 270-2400

DESIGN RTP 9/03 | CHECK TWB 9/03 | QA AUDIT
DRAWN CHP 9/03 | CHECK AJT 9/03 | DATE
QUANT. ES 9/03 | CHECK DTP 10/03 | BY

COTTONWOOD STREET
5600 SOUTH TO VINE STREET
ROADWAY PLAN

REVISIONAL RECORD — DATE
APPROVED — DATE
DESIGN ENGINEER
PROJECT MANAGER

SALT LAKE COUNTY

PROJECT NUMBER #HPP-STP-2148(1)0

SHEET NO. DT-2

@FILE@ @DATE@ @TIME@

SUPERELEVATION

6%
4%
2%
0%
-2%
-4%
-6%

24+96.00
+1.06%

MATCH EXISTING

LEFT

AXIS OF ROTATION

LEFT & RIGHT -2.0%

RIGHT

24+96.00
-1.40%

-2.0%
25+15.46

-2.0%
25+78.82

COTTONWOOD STREET PROFILE

5590 SOUTH
BEGIN COTTONWOOD STREET PROFILE
PVI 24+96.00
Elev 4316.52
MATCH EXISTING ELEVATION
(FIELD VERIFY)

COTTONWOOD STREET
PROFILE GRADE LINE
(PGL)

PVI 26+50.00
Elev 4317.27

PVC 27+93.92
Elev 4316.55

L 475.00 FT
K 73.648

0.500%

-0.500%

PVC 25+80.00
Elev 4316.92

L 140.00 FT
K 140.000

PVI 27+20.00
Elev 4316.92

EXISTING GROUND
AT PGL

4345
4340
4335
4330
4325
4320
4315
4310
4305
4300

4316.52 4316.62 4316.72 4316.82 4316.92 4317.01 4317.06 4317.09 4317.09 4317.06 4317.01 4316.92 4316.82 4316.72 4316.62 4316.52 4316.47 4316.46 4316.52 4316.62 4316.78

24+00 +20 +40 +60 +80 25+00 +20 +40 +60 +80 26+00 +20 +40 +60 +80 27+00 +20 +40 +60 +80 28+00 +20 +40 +60 +80 29+00 +20

RELEASE FOR CONSTRUCTION

NO.	DATE	DESCRIPTION

MURRAY CITY CORPORATION
DEPARTMENT OF PUBLIC SERVICES -- ENGINEERING DIVISION
4646 SOUTH 500 WEST, MURRAY UT, 84123 - (801) 270-2400

DESIGN RP 4/03 CHECK AT 5/03 QA AUDIT
DRAWN CW 4/03 CHECK AT 5/03 DATE
QUANT. CHECK BY

APPROVAL RECOMM. DATE DESIGN ENGINEER
APPROVED DATE PROJECT MANAGER

COTTONWOOD STREET
5600 SOUTH TO VINE STREET
ROADWAY PROFILE

PROJECT NUMBER *IPP-STP-2148(1)0

SALT LAKE COUNTY

SHEET NO. 38

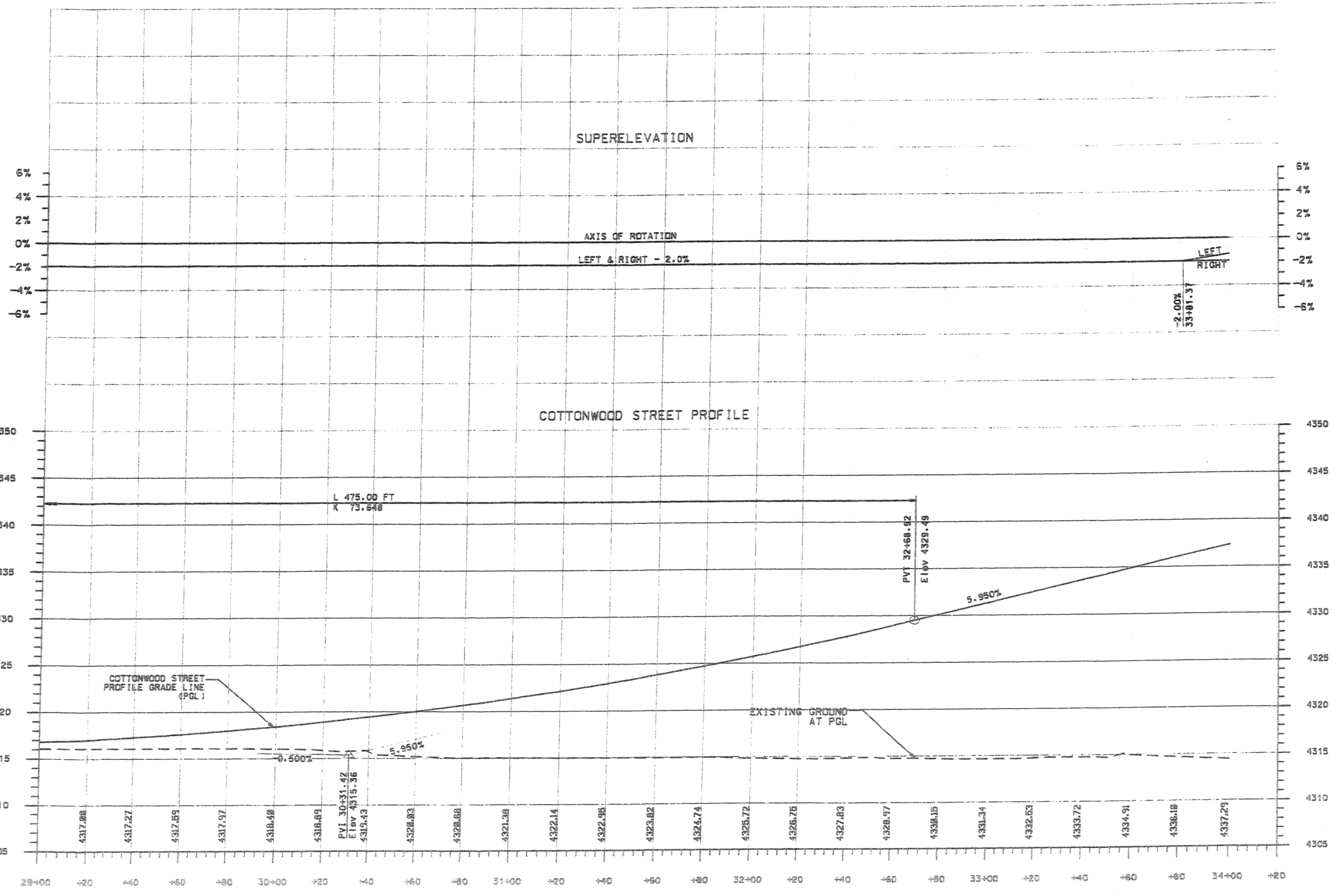

RELEASE FOR CONSTRUCTION

NO.	DATE	DESCRIPTION

MURRAY CITY CORPORATION
DEPARTMENT OF PUBLIC SERVICES -- ENGINEERING DIVISION
4646 SOUTH 500 WEST, MURRAY UT, 84123 -- (801) 270-2400

DESIGN RP 4/03	CHECK AT 5/03	QA AUDIT	
DRAWN CW 4/03	CHECK AT 5/03	DATE	
QUANT.	CHECK	BY	

APPROVED _____ DATE _____ PROJECT MANAGER
APPROVAL RECOMM. _____ DATE _____ DESIGN ENGINEER

COTTONWOOD STREET
5600 SOUTH TO VINE STREET
ROADWAY PROFILE

PROJECT NUMBER *HPP-STP-2148(110

SALT LAKE COUNTY

SHEET NO. 30-7

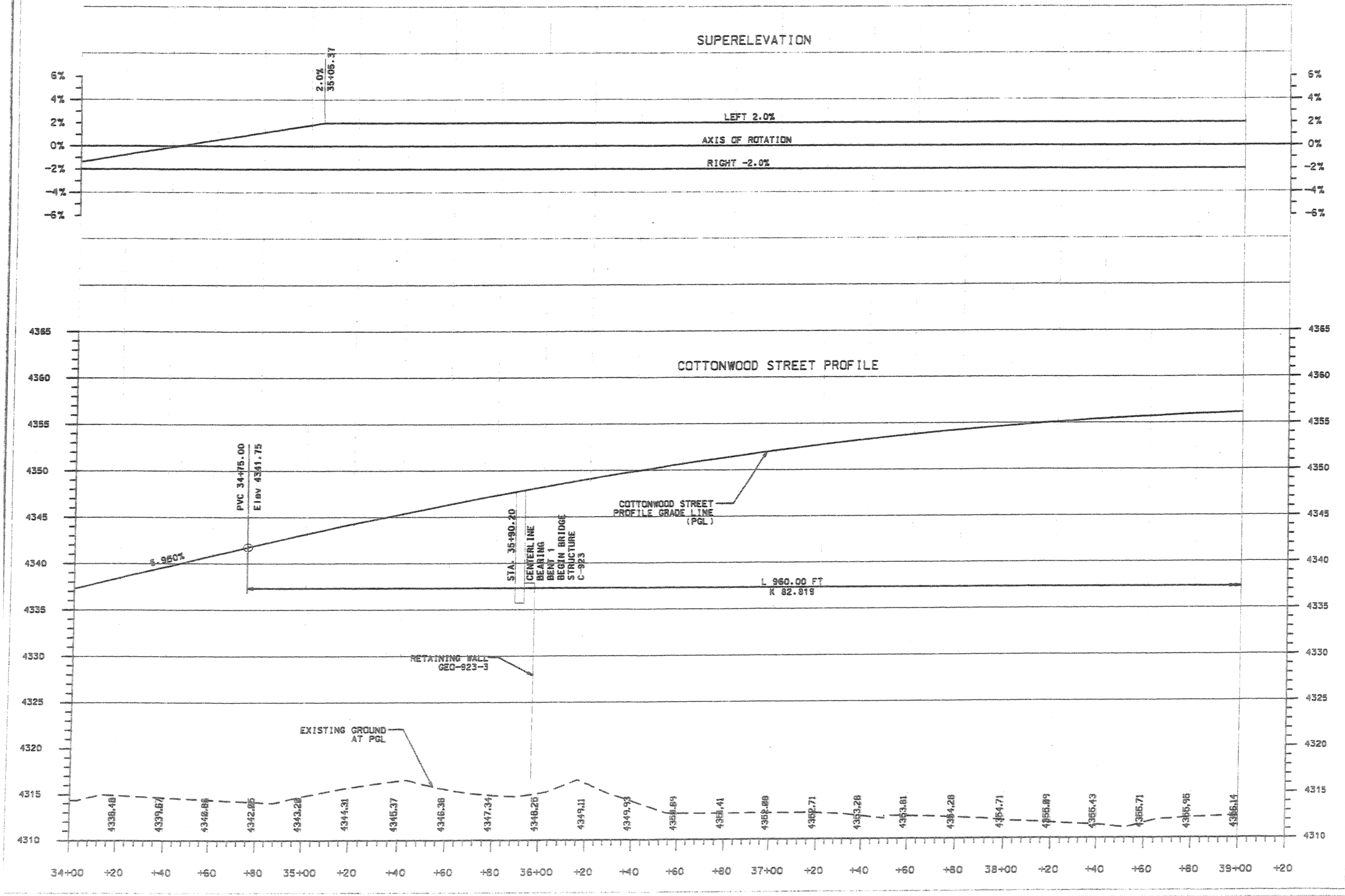

RELEASE FOR CONSTRUCTION

NO.	DATE	DESCRIPTION

MURRAY CITY CORPORATION
DEPARTMENT OF PUBLIC SERVICES – ENGINEERING DIVISION
4646 SOUTH 500 WEST, MURRAY UT, 84123 – (801) 270-2400

DESIGN RP 4/03 CHECK AT 5/03 QA AUDIT
DRAWN CW 4/03 CHECK AT 5/03 DATE
QUANT. CHECK BY

APPROVAL RECOMMENDED DATE DESIGN ENGINEER
APPROVED DATE PROJECT MANAGER

COTTONWOOD STREET
5600 SOUTH TO VINE STREET
ROADWAY PROFILE
PROJECT NUMBER *HPP-STP-2148(11)0

SALT LAKE COUNTY

SHEET NO. RP-3

SUPERELEVATION

6%
4%
2%
0%
-2%
-4%
-6%

LEFT 2.0%

AXIS OF ROTATION

RIGHT -2.0%

SUPERELEVATION

COTTONWOOD STREET PROFILE

4370
4365
4360
4355
4350
4345
4340
4335
4330
4325
4320
4315
4310
4305
4300

5.950%

-5.640%

PVI 39+55.00
Elev 4370.31

COTTONWOOD STREET PROFILE GRADE LINE (PGL)

L 960.00 FT
K 82.819

EXISTING GROUND AT PGL

5300 SOUTH

4356.27 4356.37 4356.41 4356.40 4356.36 4356.25 4356.10 4356.09 4355.85 4355.38 4355.61 4354.62 4354.18 4353.89 4353.16 4352.57 4351.94 4351.26 4350.53 4349.75 4348.92 4348.05 4347.12 4346.15 4345.13

39+00 +20 +40 +60 +80 40+00 +20 +40 +60 +80 41+00 +20 +40 +60 +80 42+00 +20 +40 +60 +80 43+00 +20 +40 +60 +80 44+00 +20

$DATE$ $TIME$

RELEASE FOR CONSTRUCTION

NO.	DATE	DESCRIPTION

MURRAY CITY CORPORATION
DEPARTMENT OF PUBLIC SERVICES --- ENGINEERING DIVISION
4646 SOUTH 500 WEST, MURRAY UT. 84123 - (801) 270-2400

DESIGN RP 4/03 | CHECK AT 5/03 | QA AUDIT
DRAWN CW 4/03 | CHECK AT 5/03 | DATE
QUANT. | CHECK | BY

APPROVAL RECOMM. DATE DESIGN ENGINEER
APPROVED DATE PROJECT MANAGER

COTTONWOOD STREET
5600 SOUTH TO VINE STREET
ROADWAY PROFILE

SALT LAKE COUNTY

PROJECT NUMBER *HPP-STP-2148(1)0

SUPERELEVATION

COTTONWOOD STREET PROFILE

RELEASE FOR CONSTRUCTION

NO.	DATE	DESCRIPTION

MURRAY CITY CORPORATION
DEPARTMENT OF PUBLIC SERVICES --- ENGINEERING DIVISION
4646 SOUTH 500 WEST, MURRAY UT, 84123 - (801) 270-2400

DESIGN RP 4/03	CHECK AT 5/03	QA AUDIT
DRAWN CW 4/03	CHECK AT 5/03	DATE
QUANT.	CHECK	BY

APPROVAL RECOMM. DATE — DESIGN ENGINEER
APPROVED DATE — PROJECT MANAGER

COTTONWOOD STREET
5600 SOUTH TO VINE STREET
ROADWAY PROFILE

PROJECT NUMBER *HPP-STP-2148(110

SALT LAKE COUNTY

SHEET NO. RP-5

$DATE$ $TIME$

SUPERELEVATION

6%
4%
2%
0%
-2%
-4%
-6%

2.0%
49+71.20

LEFT 2.0%

AXIS OF ROTATION

RIGHT -2.0%

LEFT & RIGHT -2.0%

-2.00%
51+15.20

-2.00%
51+70.00

COTTONWOOD STREET PROFILE

4340
4335
4330
4325
4320
4315
4310
4305
4300
4295

L 380.00 FT
K 72.491

COTTONWOOD STREET
PROFILE GRADE LINE
(PGL)

-5.640%

0.400%

PVI 49+38.00
Elev 4314.65

EXISTING GROUND
AT PGL

PVT 51+28.00
Elev 4314.09

-0.400%

PVI 51+52.00
Elev 4314.00

-0.860%

END COTTONWOOD STREET PROFILE
PVI 51+70.00

Elev 4313.84
MATCH ELEVATION AT
1" BELOW EXISTING

DO NOT DISTURB
GEOMEMBRANE
LINED REPOSITORY

4317.91 4317.28 4316.71 4316.19 4315.73 4315.33 4314.98 4314.68 4314.44 4314.26 4314.13 4314.04 4313.92

49+00 +20 +40 +60 +80 50+00 +20 +40 +60 +80 51+00 +20 +40 +60 +80 52+00

$FILE$

RELEASE FOR CONSTRUCTION

NO.	DATE	DESCRIPTION

MURRAY CITY CORPORATION
DEPARTMENT OF PUBLIC SERVICES -- ENGINEERING DIVISION
4646 SOUTH 500 WEST, MURRAY UT. 84123 - (801) 270-2400

DESIGN RP 4/03 | CHECK AT 5/03 | QA AUDIT
DRAWN CW 4/03 | CHECK AT 5/03 | DATE
QUANT. | CHECK | BY

APPROVAL RECOMM. DATE DESIGN ENGINEER
APPROVED DATE PROJECT MANAGER

COTTONWOOD STREET
5600 SOUTH TO VINE STREET
ROADWAY PROFILE

PROJECT NUMBER *HPP-STP-2148(1)0

SALT LAKE COUNTY

SHEET NO. RP-6

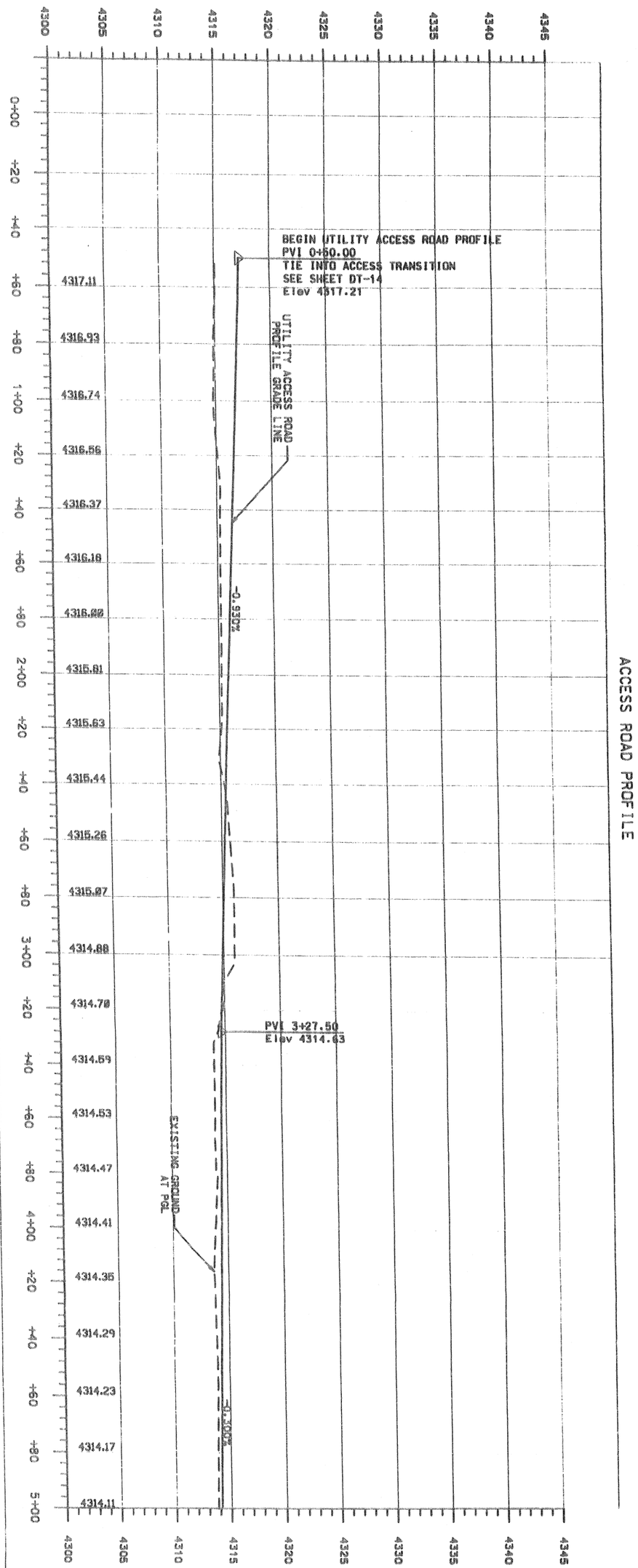

SHEET NO. RP-7

SALT LAKE COUNTY

COTTONWOOD STREET

5600 SOUTH TO VINE STREET

ACCESS ROAD PROFILE

PROJECT NUMBER *HPP-STP-2148(1)0

MURRAY CITY CORPORATION

DEPARTMENT OF PUBLIC SERVICES -- ENGINEERING DIVISION

4646 SOUTH 500 WEST, MURRAY UT, 84123 - (801) 270-2400

APPROVAL RECOMM. ____ DATE ____ DESIGN ENGINEER

APPROVED ____ DATE ____ PROJECT MANAGER

DESIGN RP 4/03 | CHECK AT 5/03 | QA AUDIT

DRAWN CW 4/03 | CHECK AT 5/03 | DATE

QUANT. ____ | CHECK ____ | BY

RELEASE FOR CONSTRUCTION

NO.	DATE	DESCRIPTION

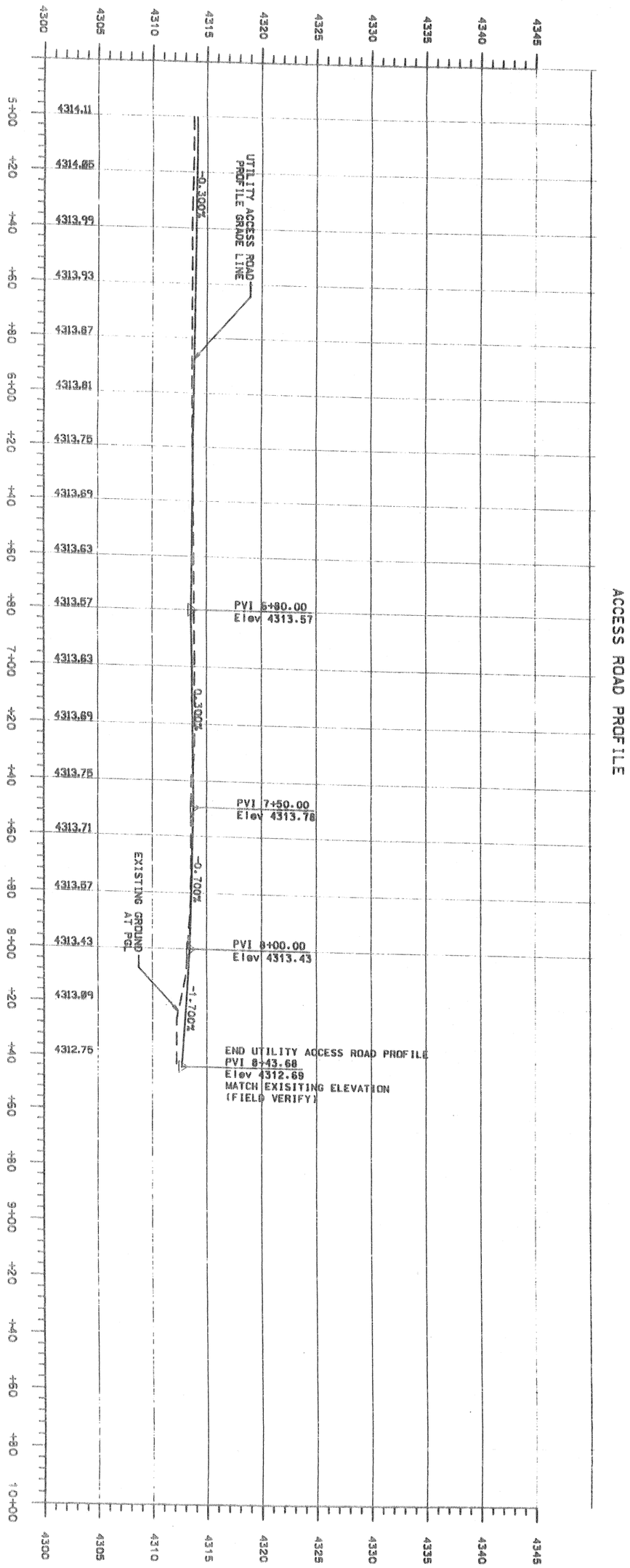

ACCESS ROAD PROFILE

SHEET NO. RP-8

SALT LAKE COUNTY

COTTONWOOD STREET
5600 SOUTH TO VINE STREET
ACCESS ROAD PROFILE

PROJECT NUMBER *HPP-STP-2148(1)0

MURRAY CITY CORPORATION
DEPARTMENT OF PUBLIC SERVICES -- ENGINEERING DIVISION
4646 SOUTH 500 WEST, MURRAY UT, 84123 - (801) 270-2400

APPROVAL RECOM. ____ DATE ____ DESIGN ENGINEER
APPROVED ____ DATE ____ PROJECT MANAGER

DESIGN RP 4/03 CHECK AT 5/03 QA AUDIT
DRAWN CW 4/03 CHECK AT 5/03 DATE
QUANT. ____ CHECK ____ BY ____

RELEASE FOR CONSTRUCTION

NO.	DATE	DESCRIPTION

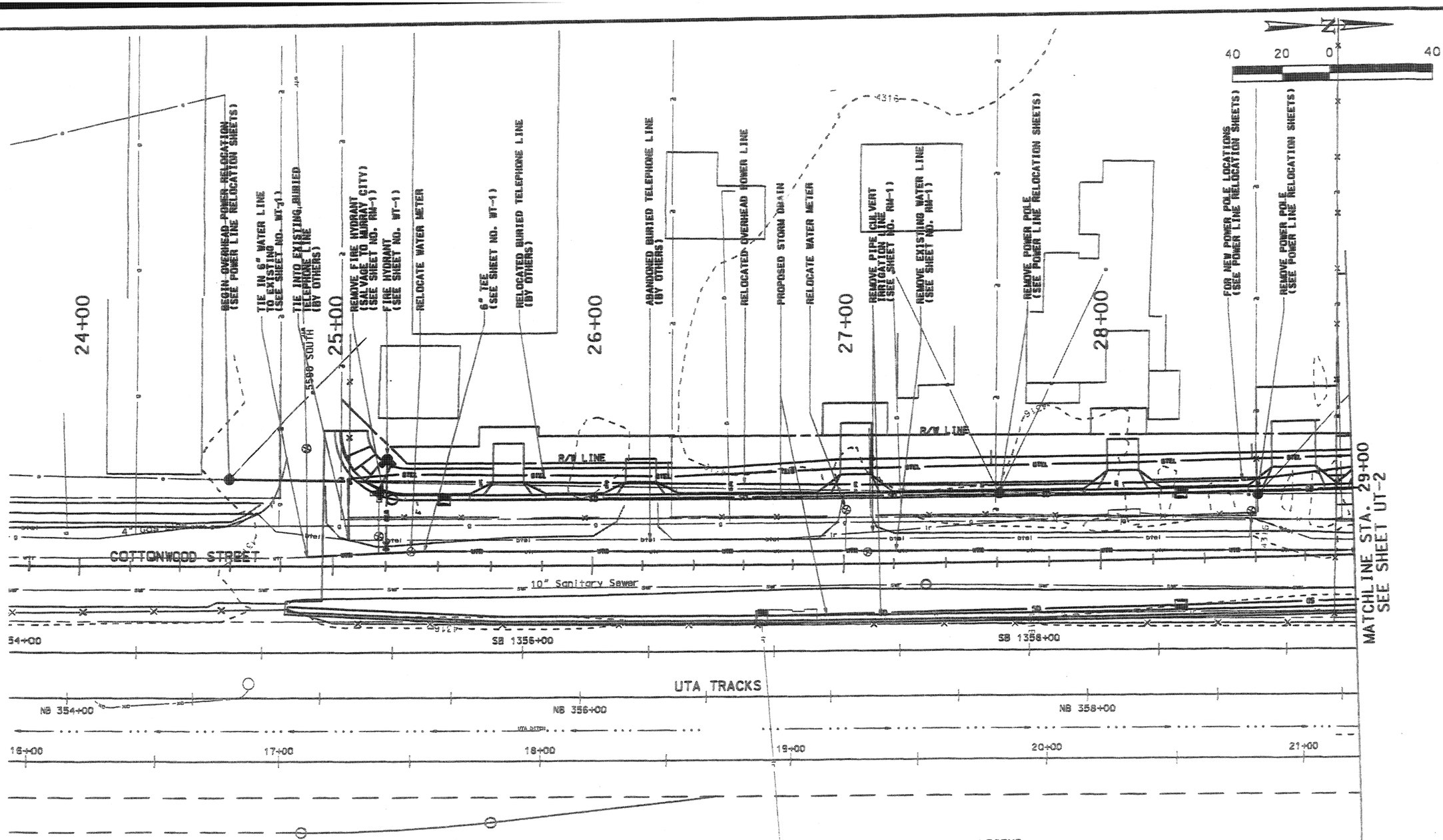

COMPANY	CONTACT	PHONE #
MURRAY CITY POWER	KELLY PETERSON	264-2720
MURRAY CITY WATER	DANNY ASTILL	270-2440
MURRAY CITY SEWER	DANNY ASTILL	270-2440
UTA (UNDERGROUND SIGNAL CONDUIT & OVERHEAD CONTACT WIRES)	RON BENSON	514-6459
UTA (UNDERDRAIN PIPES & MONITOR WELLS)	GRANTLEY MARTELLY	262-5626 ext. 3059
UTA (TRACK ACCESS COORDINATOR)	COORDINATOR ON DUTY	352-6701
UTAH RAILWAY (TRAIN MASTER)	MIKE LUNDELL/L.D.FREEMAN	233-0666
QWEST PHONE	JEFF STAPLEY	974-9505
QUESTAR GAS	RICH PIGOT	324-3724

LEGEND

- EXISTING RIGHT-OF-WAY
- PROPERTY LINE
- CONSTRUCTION EASEMENT
- RIGHT OF WAY
- EXISTING FENCE

PROPOSED UTILITY LEGEND

- PROPOSED BURIED GAS
- PROPOSED BURIED TELEPHONE
- PROPOSED WATER
- PROPOSED AERIAL TELEPHONE
- PROPOSED SANITARY SEWER
- PROPOSED STORM DRAIN
- PROPOSED AERIAL POWER
- PROPOSED BURIED POWER

EXISTING UTILITY LEGEND

- EXISTING BURIED GAS
- EXISTING BURIED TELEPHONE
- EXISTING WATER
- EXISTING AERIAL TELEPHONE
- EXISTING SANITARY SEWER
- EXISTING IRRIGATION
- EXISTING AERIAL POWER
- EXISTING BURIED POWER
- EXISTING UTA CONDUIT
- EXISTING UTA DITCH
- EXISTING STORM DRAIN
- EXISTING UTA 8" UNDER DRAIN

RELEASE FOR CONSTRUCTION

NO.	DATE	DESCRIPTION

MURRAY CITY CORPORATION
DEPARTMENT OF PUBLIC SERVICES — ENGINEERING DIVISION
4646 SOUTH 500 WEST, MURRAY UT. 84123 - (801) 270-2400

DESIGN BS 8/03 CHECK DTP 8/03 QA AUDIT
DRAWN CP 8/03 CHECK DTP 8/03 DATE
QUANT. CHECK BY

APPROVAL RECOMMENDED: DATE DESIGN ENGINEER
APPROVED DATE PROJECT MANAGER

COTTONWOOD STREET
5600 SOUTH TO VINE STREET
UTILITY PLAN

PROJECT NUMBER *HPP-STP-2148(1)0

SALT LAKE COUNTY

SHEET NO. UT-1

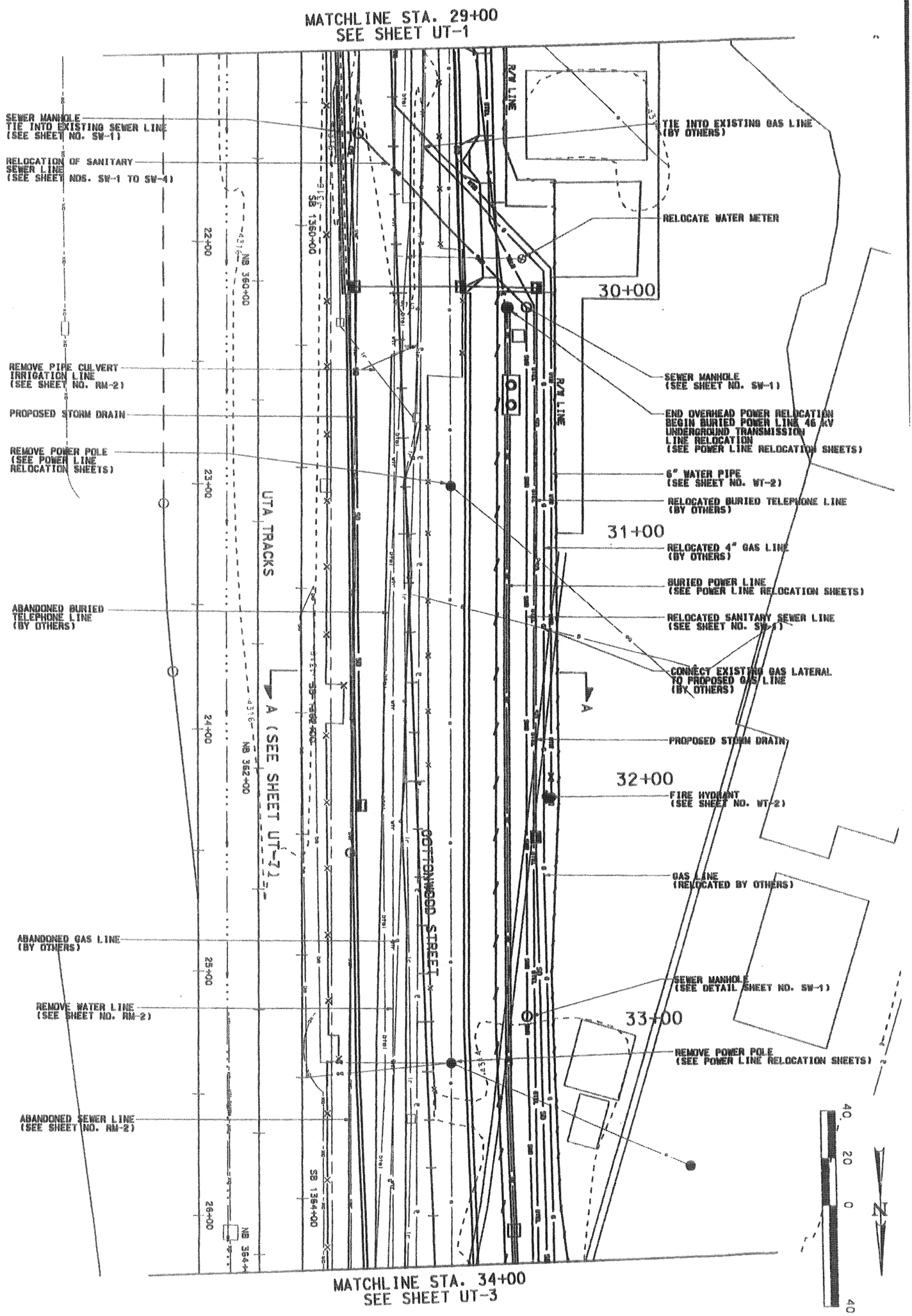

SHEET NO. UT-2	COTTONWOOD STREET 5600 SOUTH TO VINE STREET UTILITY PLAN	MURRAY CITY CORPORATION DEPARTMENT OF PUBLIC SERVICES -- ENGINEERING DIVISION 4646 SOUTH 500 WEST, MURRAY UT, 84123 - (801) 270-2400			RELEASE FOR CONSTRUCTION
SALT LAKE COUNTY	PROJECT NUMBER *HPP-STP-2148(1)0	APPROVAL RECOMM. ____ DATE ____ DESIGN ENGINEER APPROVED ____ DATE ____ PROJECT MANAGER	DESIGN BS 8/03 CHECK DTP 8/03 DRAWN CP 8/03 CHECK DTP 8/03 QUANT. ____ CHECK ____	QA AUDIT DATE ____ BY ____	NO. / DATE / DESCRIPTION

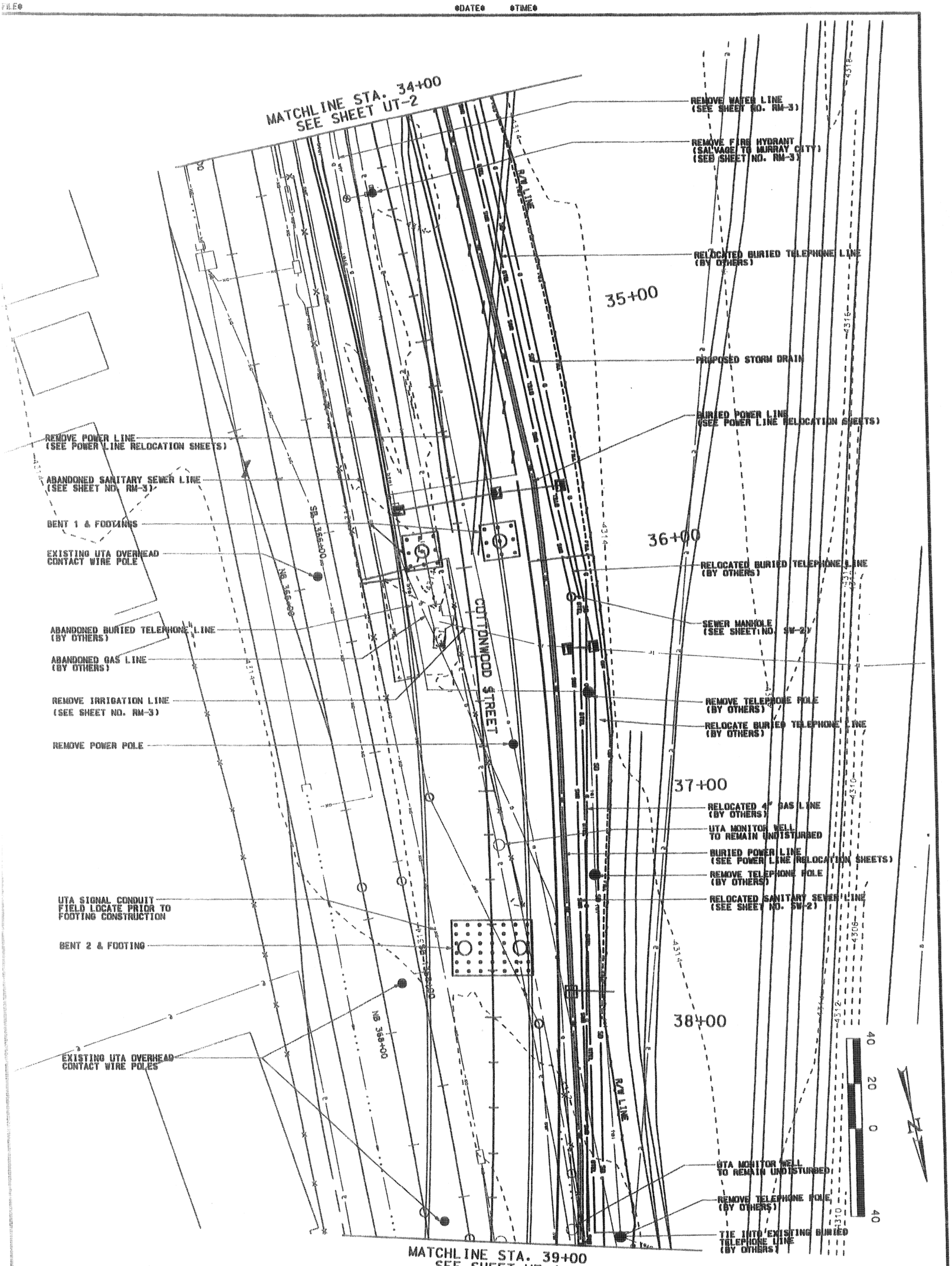

SALT LAKE COUNTY	COTTONWOOD STREET 5600 SOUTH TO VINE STREET UTILITY PLAN PROJECT NUMBER *HPP-STP-2148(1)0	MURRAY CITY CORPORATION DEPARTMENT OF PUBLIC SERVICES — ENGINEERING DIVISION 4646 SOUTH 500 WEST, MURRAY UT. 84123 – (801) 270-2400 APPROVAL RECOMM. DATE DESIGN ENGINEER APPROVED DATE PROJECT MANAGER	DESIGN BS 8/03 CHECK DTP 8/03 QA AUDIT DRAWN CP 8/03 CHECK DTP 8/03 DATE QUANT. CHECK BY	RELEASE FOR CONSTRUCTION NO. DATE DESCRIPTION			

@FILE@ @DATE@ @TIME@

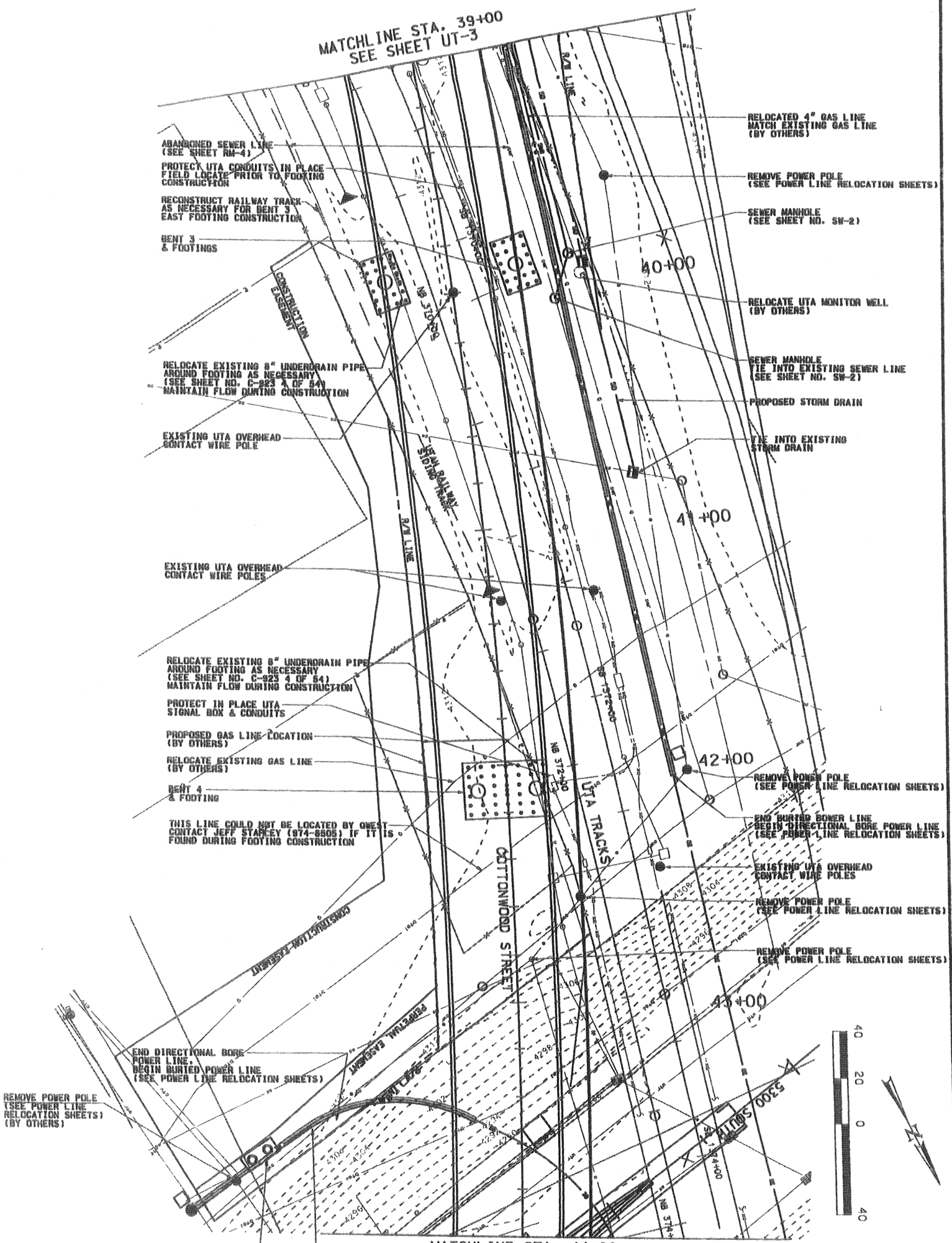

SALT LAKE COUNTY	COTTONWOOD STREET 5600 SOUTH TO VINE STREET UTILITY PLAN PROJECT NUMBER *HPP-STP-2148(1)0	MURRAY CITY CORPORATION DEPARTMENT OF PUBLIC SERVICES -- ENGINEERING DIVISION 4646 SOUTH 500 WEST, MURRAY UT, 84123 - (801) 270-2400 APPROVAL RECOMM. ____ DATE ____ DESIGN ENGINEER APPROVED ____ DATE ____ PROJECT MANAGER	DESIGN BS 8/03 CHECK DTP 8/03 QA AUDIT DRAWN CP 8/03 CHECK DTP 8/03 DATE QUANT. ____ CHECK ____ BY	RELEASE FOR CONSTRUCTION NO. / DATE / DESCRIPTION	

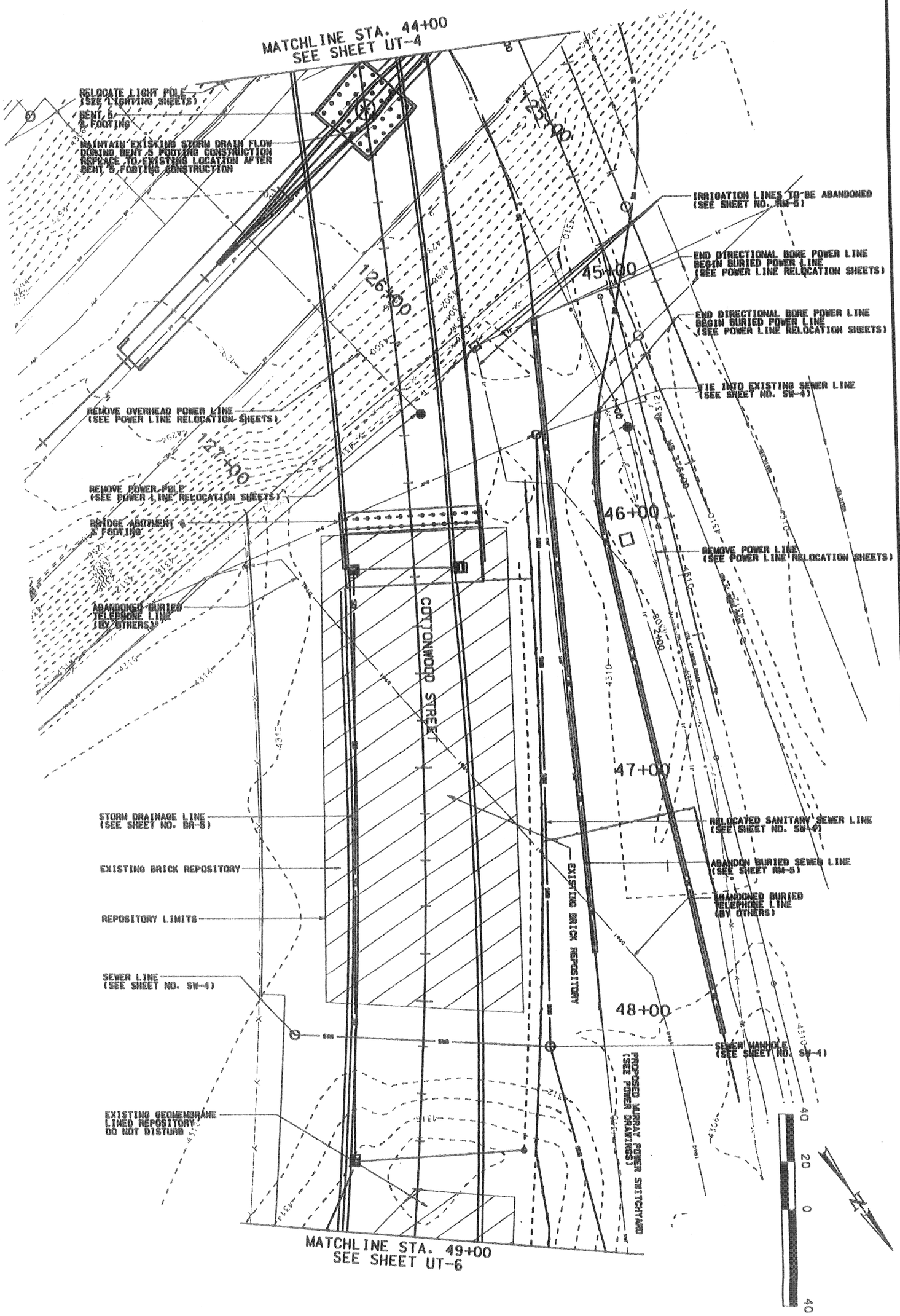

SALT LAKE COUNTY	COTTONWOOD STREET	MURRAY CITY CORPORATION	RELEASE FOR CONSTRUCTION
SHEET NO. UT-5	5600 SOUTH TO VINE STREET	DEPARTMENT OF PUBLIC SERVICES — ENGINEERING DIVISION	NO. / DATE / DESCRIPTION
	UTILITY PLAN	4646 SOUTH 500 WEST, MURRAY UT, 84123 - (801) 270-2400	
	PROJECT NUMBER *HPP-STP-2148(1)0	APPROVAL RECOM. ____ DATE ____ DESIGN ENGINEER; APPROVED ____ DATE ____ PROJECT MANAGER	DESIGN BS 8/03 CHECK DTP 8/03 QA AUDIT; DRAWN CP 8/03 CHECK DTP 8/03 DATE; QUANT. ____ CHECK ____ BY

MATCHLINE STA. 49+00
SEE SHEET UT-5

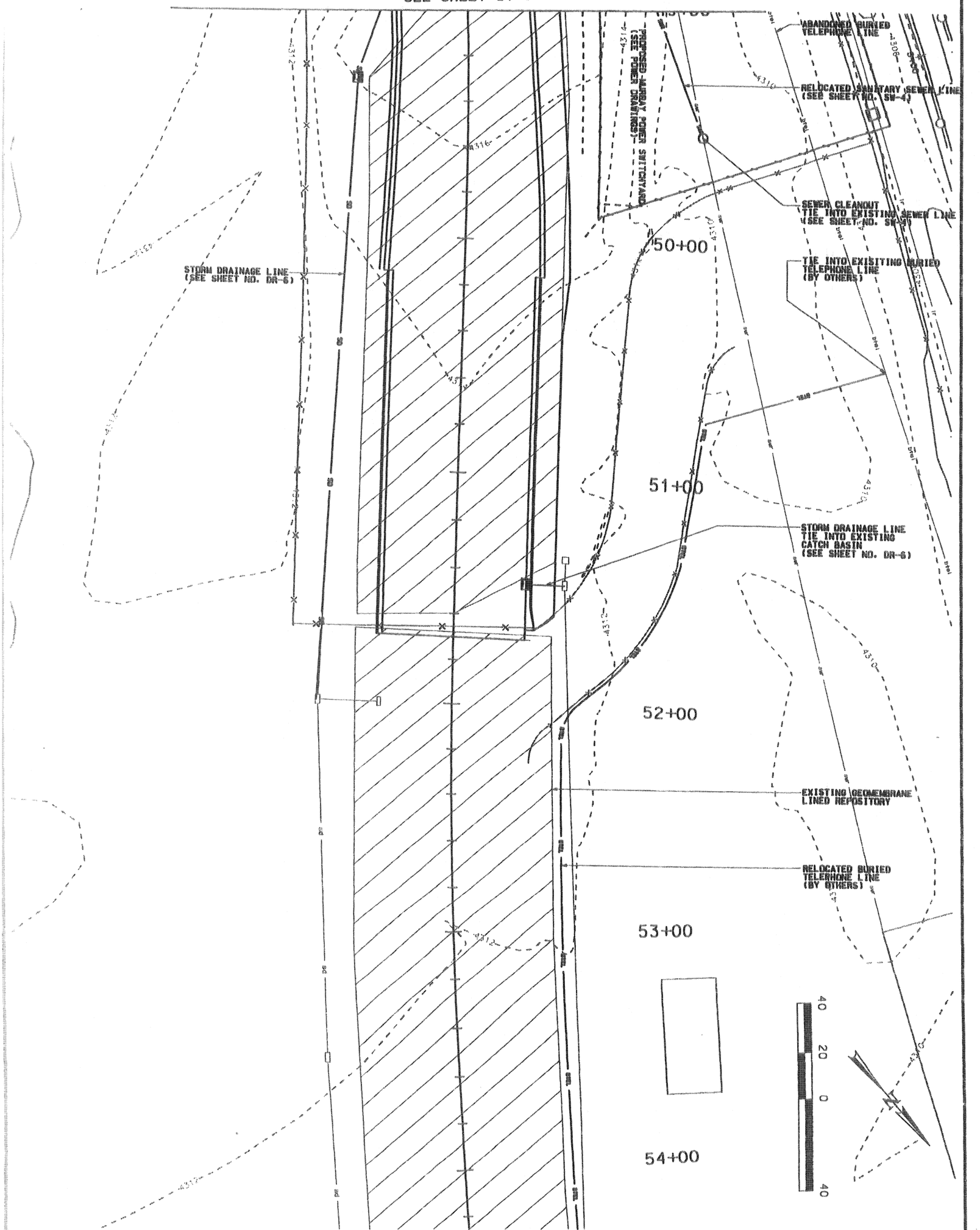

SALT LAKE COUNTY

SHEET NO. UT-6

COTTONWOOD STREET
5600 SOUTH TO VINE STREET
UTILITY PLAN

PROJECT NUMBER *HPP-STP-2148(1)0

MURRAY CITY CORPORATION
DEPARTMENT OF PUBLIC SERVICES — ENGINEERING DIVISION
4646 SOUTH 500 WEST, MURRAY UT, 84123 - (801) 270-2400

APPROVAL RECOMM. _____ DATE _____ DESIGN ENGINEER
APPROVED _____ DATE _____ PROJECT MANAGER

DESIGN BS 8/03 | CHECK DTP 8/03 | QA AUDIT
DRAWN CP 8/03 | CHECK DTP 8/03 | DATE
QUANT. _____ | CHECK _____ | BY

RELEASE FOR CONSTRUCTION		
NO.	DATE	DESCRIPTION

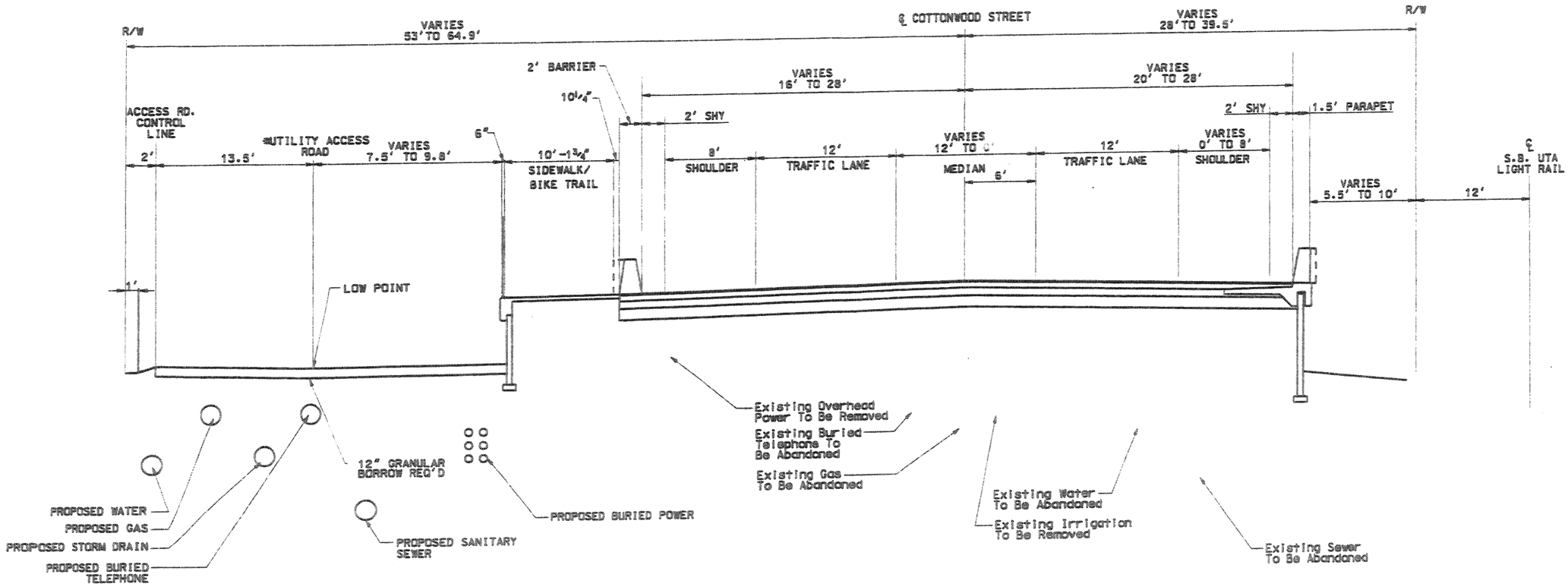

SECTION A-A (FROM SHEET UT-2)

COTTONWOOD STREET
STA. 30+00 TO STA. 33+00
EXISTING AND PROPOSED UTILITIES

RELOCATE SANITARY SEWER, WATER, STORM DRAINAGE, AND BURIED POWER PRIOR TO RELOCATION OF GAS AND TELEPHONE LINES.

RELEASE FOR CONSTRUCTION

NO.	DATE	DESCRIPTION

MURRAY CITY CORPORATION
DEPARTMENT OF PUBLIC SERVICES -- ENGINEERING DIVISION
4646 SOUTH 500 WEST, MURRAY UT. 84123 - (801) 270-2400

DESIGN BS 8/03 CHECK DTP 8/03 QA AUDIT
DRAWN CP 8/03 CHECK DTP 8/03 DATE
QUANT. CHECK BY

APPROVAL RECOMM. DATE DESIGN ENGINEER
APPROVED DATE PROJECT MANAGER

COTTONWOOD STREET
5600 SOUTH TO VINE STREET
UTILITY TYPICAL SECTION
PROJECT NUMBER *HPP-STP-2148(1)0

SALT LAKE COUNTY

$DATE$ $TIME$

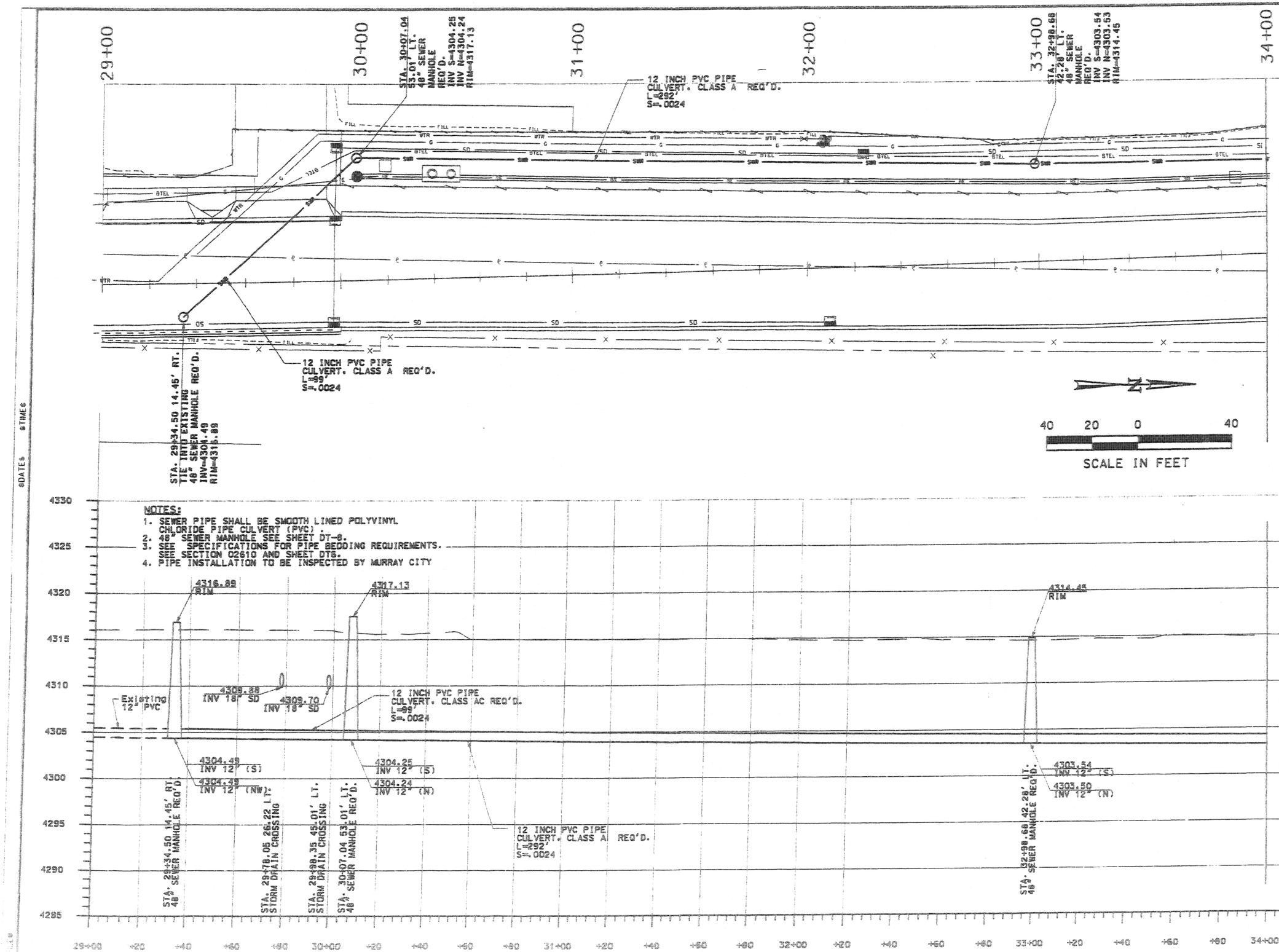

RELEASE FOR CONSTRUCTION

NO.	DATE	DESCRIPTION

MURRAY CITY CORPORATION
DEPARTMENT OF PUBLIC SERVICES -- ENGINEERING DIVISION
4646 SOUTH 500 WEST, MURRAY UT. 84123 -- (801) 270-2400

DESIGN	JD	10/03	CHECK	BS
DRAWN	JD	10/03	CHECK	MS
QUANT.	JD	10/03	CHECK	BS

QA AUDIT
DATE 10/03
DATE
BY

APPROVAL RECOMM.
DESIGN ENGINEER DATE
APPROVED
PROJECT MANAGER DATE

COTTONWOOD STREET
5600 SOUTH TO VINE STREET
SEWER PLAN / PROFILE
PROJECT NUMBER #HPP-STP-2148(1)0
SALT LAKE COUNTY
SHEET NO. SP-1

$DATE$ $TIME$

12 INCH PVC PIPE CULVERT CLASS A REQ'D. L=324' S=.0024

12 INCH PVC PIPE CULVERT CLASS A REQ'D. L=381' S=.0024

34+00 35+00 36+00 37+00 38+00 39+00

MATCHLINE STA 34+00 (SEE SHEET SW-1)

MATCHLINE STA 39+00 (SEE SHEET SW-3)

COTTONWOOD STREET

STA. 36+18.06 45.77' LT. 48" SEWER MANHOLE REQ'D. INV S=4302.75 INV N=4302.74 RIM=4313.45

40 20 0 40

SCALE IN FEET

NOTES:
1. SEWER PIPE SHALL BE SMOOTH LINED POLYVINYL CHLORIDE PIPE CULVERT (PVC).
2. 48" SEWER MANHOLE SEE SHEET DT-8.
3. SEE SPECIFICATIONS FOR PIPE BEDDING REQUIREMENTS. SEE SECTION 02610 AND SHEET DT8.
4. PIPE INSTALLATION TO BE INSPECTED BY MURRAY CITY

4330 4325 4320 4315 4310 4305 4300 4295 4290 4285

4313.45 RIM

4309.16 INV 15" SD

4306.93 INV 12" SD

4302.75 INV 12" S

4302.74 INV 12" N

12 INCH PVC PIPE CULVERT CLASS A REQ'D. L=324' S=.0024

STA. 35+70.21 41.74' LT. STORM DRAIN CROSSING

STA. 36+18.06 45.77' LT. 48" SEWER MANHOLE REQ'D.

STA. 36+40.18 43.75' LT. STORM DRAIN CROSSING

12 INCH PVC PIPE CULVERT CLASS A REQ'D. L=381' S=.0024

MATCHLINE STA 39+00 (SEE SHEET SW-3)

34+00 +20 +40 +60 +80 35+00 +20 +40 +60 +80 36+00 +20 +40 +60 +80 37+00 +20 +40 +60 +80 38+00 +20 +40 +60 +80 39+00 +20

RELEASE FOR CONSTRUCTION

NO.	DATE	DESCRIPTION

MURRAY CITY CORPORATION
DEPARTMENT OF PUBLIC SERVICES -- ENGINEERING DIVISION
4646 SOUTH 500 WEST, MURRAY UT, 84123 - (801) 270-2400

DESIGN JD 10/03 CHECK BS 10/03 QA AUDIT
DRAWN JD 10/03 CHECK MS 10/03 DATE
QUANT. JD 10/03 CHECK BS 10/03 BY

APPROVAL RECOMM. DATE DESIGN ENGINEER
APPROVED DATE PROJECT MANAGER

COTTONWOOD STREET
5600 SOUTH TO VINE STREET
SEWER PLAN / PROFILE

PROJECT NUMBER *HPP-STP-2148(1)0

SALT LAKE COUNTY

SW-2

$FILE$ $DATE$ $TIME$

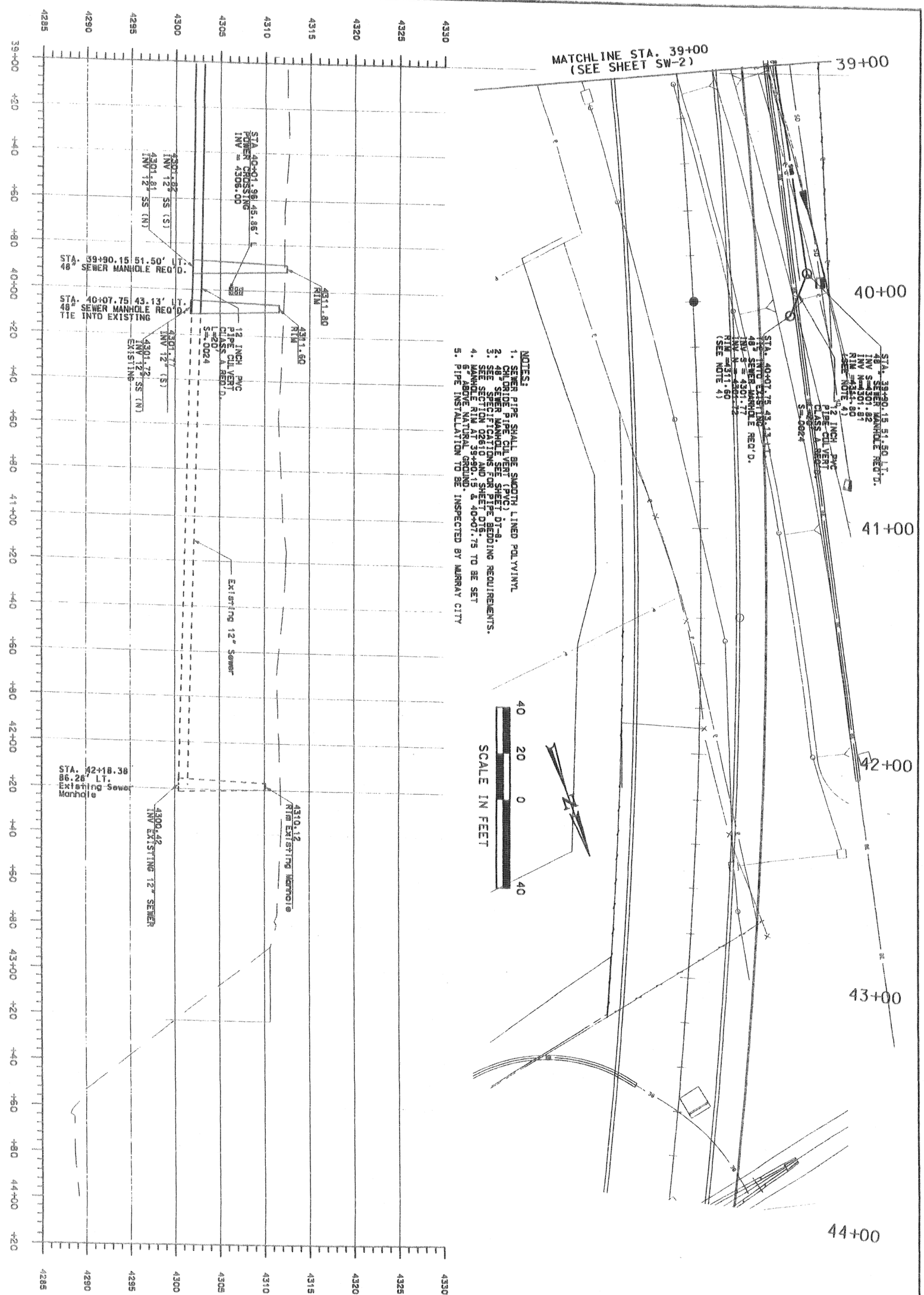

SALT LAKE COUNTY	COTTONWOOD STREET	MURRAY CITY CORPORATION	RELEASE FOR CONSTRUCTION	
	5600 SOUTH TO VINE STREET	DEPARTMENT OF PUBLIC SERVICES — ENGINEERING DIVISION	NO.	DATE / DESCRIPTION
	SEWER PLAN / PROFILE	4646 SOUTH 500 WEST, MURRAY UT, 84123 – (801) 270-2400		
	PROJECT NUMBER *HPP-STP-2148(1)0	APPROVAL RECOMM. DATE DESIGN ENGINEER; APPROVED DATE PROJECT MANAGER	DESIGN JD 10/03 CHECK BS 10/03 QA AUDIT; DRAWN JD 10/03 CHECK MS 10/03 DATE; QUANT. JD 10/03 CHECK BS 10/03 BY	

STA. 48+17.54 54.50 LT.
48" MANHOLE REQ'D.
INV 8" NORTH & EAST=4301.89
INV 8" SOUTH=4301.79
RIM=4311.00

STA. 49+53.47 102.35 LT.
RECONSTRUCT MANHOLE REQ'D
TIE INTO EXISTING SSMH &
FORM NEW FLOW CHANNEL
INV 8" NORTH & SOUTH=4302.94
RIM=4309.44

8 INCH PVC
PIPE CULVERT
CLASS A REQ'D.
L=149'
S=.0070

45+00 46+00 47+00 48+00 49+00 50+00

STA. 45+63.63, 56.42 LT.
RECONSTRUCT MANHOLE REQ'D
TIE INTO EXISTING SSMH &
FORM NEW FLOW CHANNEL
INV 12" WEST & NORTH=4300.12
RIM=4310.42

8 INCH PVC
PIPE CULVERT
CLASS A REQ'D.
L=260'
S=.0064

8 INCH PVC
PIPE CULVERT
CLASS C REQ'D.
L=110'
S=.006

18 INCH STEEL
CASING REQ'D.
L=110'
S=.006

STA. 48+17.54 55.09 RT.
48" MANHOLE REQ'D.
INV 8" WEST=4302.55
INV 8" EAST=4302.65
RIM=4314.50

8 INCH PVC PIPE
CULVERT CLASS A REQ'D.
L=5'
S=.006

INV 8" STUB = 4302.68
PLUG END WITH
PLYWOOD BLOCKING
FOR FUTURE
CONNECTION

40 20 0 50 40
SCALE IN FEET

NOTES:
1. SEWER PIPE SHALL BE SMOOTH LINED POLYVINYL CHLORIDE PIPE CULVERT (PVC) .
2. 48" SEWER MANHOLE SEE SHEET DT-8.
3. SEE SPECIFICATIONS FOR PIPE BEDDING REQUIREMENTS. SEE SECTION 02610 AND SHEET DT6.
4. MANHOLE RIM AT 48+17.54, LT & RT. TO BE SET 6" ABOVE GROUND ELEVATION
5. PIPE INSTALLATION TO BE INSPECTED BY MURRAY CITY
6. STEEL CASING TO BE INSTALLED FIRST WHILE EMBANKMENT SETTLES. AFTER SETTLEMENT, PVC PIPE TO BE INSTALLED ON REDWOOD SKIDS AND STEEL CASING FILLED WITH SAND.

4310.42
RIM

Existing Ground
At Centerline Of
Cottonwood Street

4311.00
RIM

4309.45
RIM

4300.12
INV 12" SS-W&N

STA. 45+63.63, 56.42' LT.
EXISTING SEWER MANHOLE

8 INCH PVC
PIPE CULVERT
CLASS A REQ'D.
L=260'
S=.0064

STA. 48+17.54 54.50' LT.
48" SEWER MANHOLE REQ'D.

4301.89
INV 8" SS(N&E)

4301.79
INV 8" SS(S)

8 INCH PVC
PIPE CULVERT
CLASS A REQ'D.
L=149'
S=.0070

4302.94
INV 8" SS N&S

STA. 49+53.47 102.35' LT.
EXISTING SEWER MANHOLE

4330 4325 4320 4315 4310 4305 4300 4295 4290 4285

45+00 +20 +40 +60 +80 46+00 +20 +40 +60 +80 47+00 +20 +40 +60 +80 48+00 +20 +40 +60 +80 49+00 +20 +40 +60 +80 50+00 +20

RELEASE FOR CONSTRUCTION

NO.	DATE	DESCRIPTION

MURRAY CITY CORPORATION
DEPARTMENT OF PUBLIC SERVICES — ENGINEERING DIVISION
4646 SOUTH 500 WEST, MURRAY UT, 84123 — (801) 270-2400

DESIGN	JD	10/03	QA AUDIT
DRAWN	JD	10/03	CHECK MS 10/03 DATE
QUANT.	JD	10/03	CHECK BS 10/03 BY

APPROVAL RECOMM. — DESIGN ENGINEER — DATE
APPROVED — PROJECT MANAGER — DATE

COTTONWOOD STREET
5600 SOUTH TO VINE STREET
SEWER PLAN / PROFILE
PROJECT NUMBER *HPP-STP-2148(110

SALT LAKE COUNTY

SHEET NO. SW-4

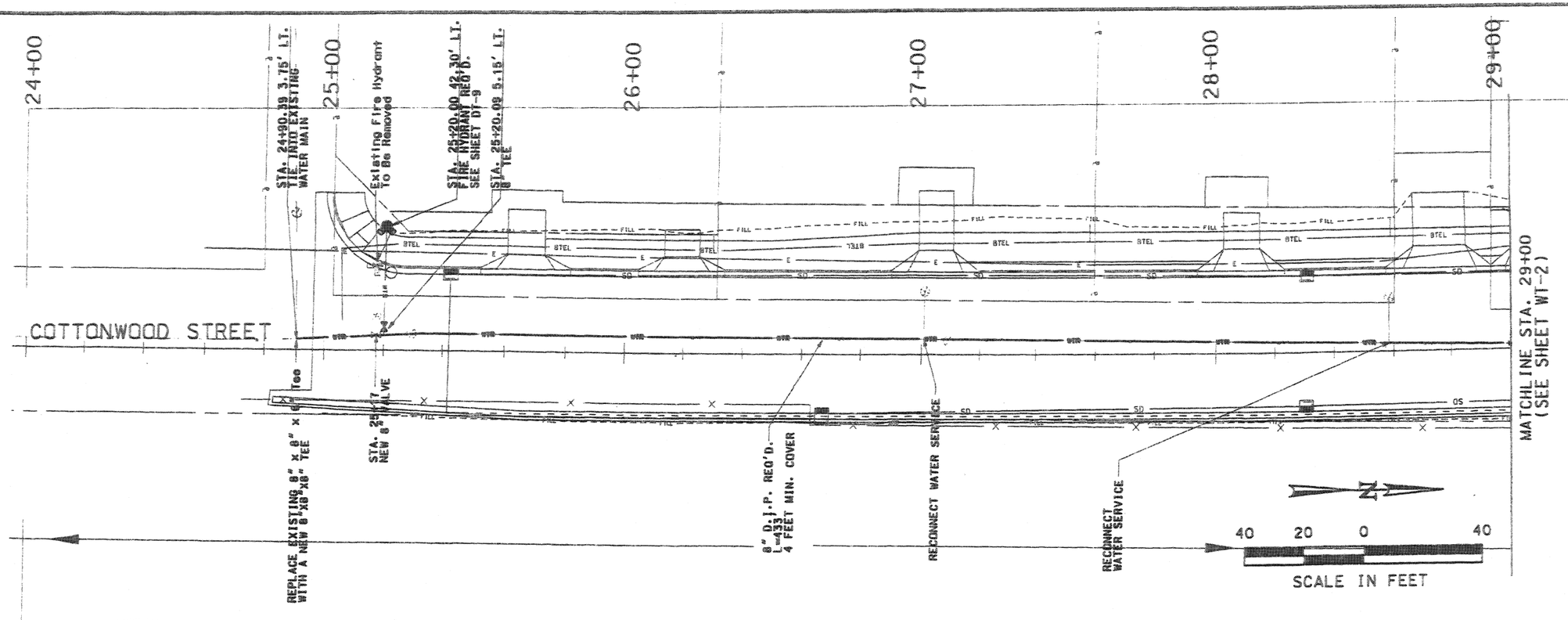

NOTES:

1. WATER MAIN WILL BE 8" MECHANICAL JOINT SPECIAL THICKNESS CLASS 52 DUCTILE IRON PIPE (D.I.P.). POLY WRAPPED.
2. FIRE HYDRANT WILL BE MUELLER A-423.
3. WATER MAIN TO HAVE 4' MINIMUM COVER.
4. CONTRACTOR TO POTHOLE AND VERIFY EXACT LOCATION, DEPTH, AND SIZE OF EXISTING WATER MAIN. IF CONDITIONS ARE DIFFERENT FROM THOSE SHOWN ON THESE PLANS, THE CONTRACTOR MUST CONTACT THE ENGINEER IMMEDIATELY FOR CLARIFICATION.
5. SEE SHEETS DT-6, DT-9 AND DT-10 FOR PIPE BEDDING, FIRE HYDRANT AND THRUST BLOCK REQUIREMENTS.
6. ALL MECHANICAL JOINTS TO BE GREASED AND POLY WRAPPED
7. EACH JOINT TO BE INSPECTED BY MURRAY CITY

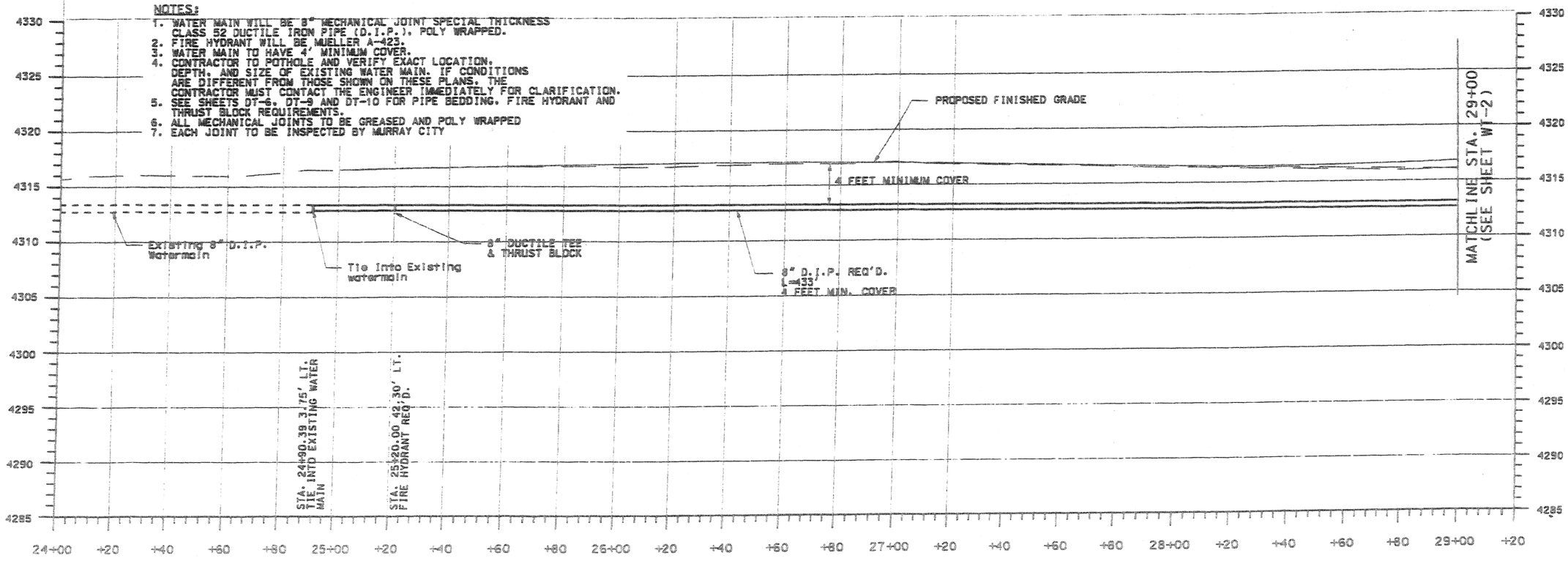

RELEASE FOR CONSTRUCTION

NO.	DATE	DESCRIPTION

MURRAY CITY CORPORATION
DEPARTMENT OF PUBLIC SERVICES -- ENGINEERING DIVISION
4646 SOUTH 500 WEST, MURRAY UT. 84123 -- (801) 270-2400

DESIGN	JD	10/03	QA AUDIT
DRAWN	JD	10/03	DATE
QUANT.	JD	10/03	BY
CHECK	BS	10/03	
CHECK	MS	10/03	
CHECK	BS	10/03	

APPROVAL NECESSARY: DATE DESIGN ENGINEER
APPROVED DATE PROJECT MANAGER

COTTONWOOD STREET
5600 SOUTH TO VINE STREET
WATER PLAN / PROFILE

PROJECT NUMBER *HPP-STP-2148(1)0

SALT LAKE COUNTY

SHEET NO. WT-1

$DATE$ $TIME$
$FILE$

MATCHLINE STA. 29+00
(SEE SHEET WT-1)

29+00 30+00 31+00 32+00 33+00 34+00

STA. 29+23.57
1.04' LT.
45° BEND &
THRUST BLOCK

STA. 29+27.22
4.47' LT.
45° BEND &
THRUST BLOCK

STA. 29+86.92
60.15' LT.
45° BEND &
THRUST BLOCK

STA. 29+90.80
63.73' LT.
45° BEND &
THRUST BLOCK

RECONNECT
WATER
SERVICE

8" D.I.P. REQ'D.
L=217'
4 FEET MINIMUM COVER

STA. 32+04.75
53.7' LT.
BOLLARD REQ'D.
SEE DETAIL
THIS SHEET

STA. 32+07.44
56.80' LT.
FIRE HYDRANT
REQ'D.

STA. 32+10.23
53.65' LT.
BOLLARD REQ'D.
SEE DETAIL
THIS SHEET

45°

COTTONWOOD STREET

8" D.I.P. REQ'D.
L=92'
4 FEET MINIMUM COVER

N

40 20 0 40

SCALE IN FEET

NOTES:
1. WATER MAIN WILL BE 8" MECHANICAL JOINT SPECIAL THICKNESS CLASS 52 DUCTILE IRON PIPE (D.I.P.). POLY WRAPPED.
2. FIRE HYDRANT WILL BE MUELLER A-423.
3. WATER MAIN TO HAVE 4' MINIMUM COVER.
4. CONTRACTOR TO POTHOLE AND VERIFY EXACT LOCATION. DEPTH AND SIZE OF EXISTING WATER MAIN. IF CONDITIONS ARE DIFFERENT FROM THOSE SHOWN ON THESE PLANS, THE CONTRACTOR MUST CONTACT THE ENGINEER IMMEDIATELY FOR CLARIFICATION.
5. SEE SHEETS DT-6, DT-9 AND DT-10 FOR PIPE BEDDING, FIRE HYDRANT AND THRUST BLOCK REQUIREMENTS.
6. ALL MECHANICAL JOINTS TO BE GREASED AND POLY WRAPPED
7. EACH JOINT TO BE INSPECTED BY MURRAY CITY

4330 4325 4320 4315 4310 4305 4300 4295 4290 4285

4 FEET MINIMUM COVER
BEND PIPE JOINTS TO GO
UNDER STORM DRAIN

8" D.I.P. REQ'D.
L=8.0'

8" D.I.P. REQ'D.
L=7.0'

4310.02
INV 18" SD

45° BEND & THRUST
BLOCK

Existing Grade

4 FEET MINIMUM COVER FROM FINISHED GRADE

8" D.I.P. REQ'D.
L=217'
4 FEET MINIMUM COVER

45° BEND & THRUST
BLOCK

8" D.I.P. REQ'D.
L=81'
4 FEET MINIMUM COVER
MINIMUM 18" CLEARANCE
UNDER STORM DRAIN

STA. 29+23.57 1.04' LT. 45° BEND
STA. 29+27.22 4.47' LT. 45° BEND
STA. 29+50.5 to 26.3' LT. STORM DRAIN CROSSING
STA. 29+86.92 60.15' LT. 45° BEND
STA. 29+90.80 63.73' LT. 45° BEND
STA. 32+07.07 39.98' LT. END 8" WATER MAIN FIRE HYDRANT REQ'D.

29+00 +20 +40 +60 +80 30+00 +20 +40 +60 +80 31+00 +20 +40 +60 +80 32+00 +20 +40

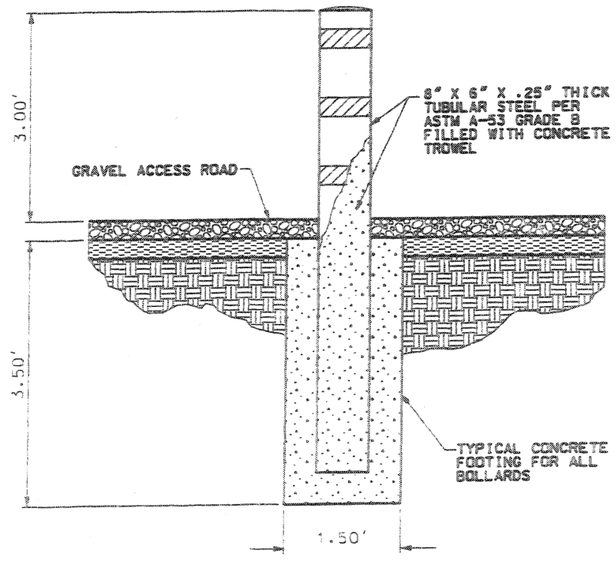

SQUARE TYPICAL CONCRETE CLASS AA(AE)

BOLLARD DETAIL

NTS
COTTONWOOD STREET
STA. 32+04.75 & STA. 32+10.23

RELEASE FOR CONSTRUCTION

NO.	DATE	DESCRIPTION

MURRAY CITY CORPORATION
DEPARTMENT OF PUBLIC SERVICES -- ENGINEERING DIVISION
4646 SOUTH 500 WEST, MURRAY UT, 84123 - (801) 270-2400

DESIGN JD 10/03	CHECK BS 10/03	QA AUDIT	
DRAWN JD 10/03	CHECK MS 10/03	DATE	
QUANT. JD 10/03	CHECK BS 10/03	BY	

APPROVAL RECOMMENDED — DESIGN ENGINEER — DATE
APPROVED — PROJECT MANAGER — DATE

COTTONWOOD STREET
5600 SOUTH TO VINE STREET
WATER PLAN / PROFILE
PROJECT NUMBER #IPP-STP-2148(110)

SALT LAKE COUNTY

WT-2

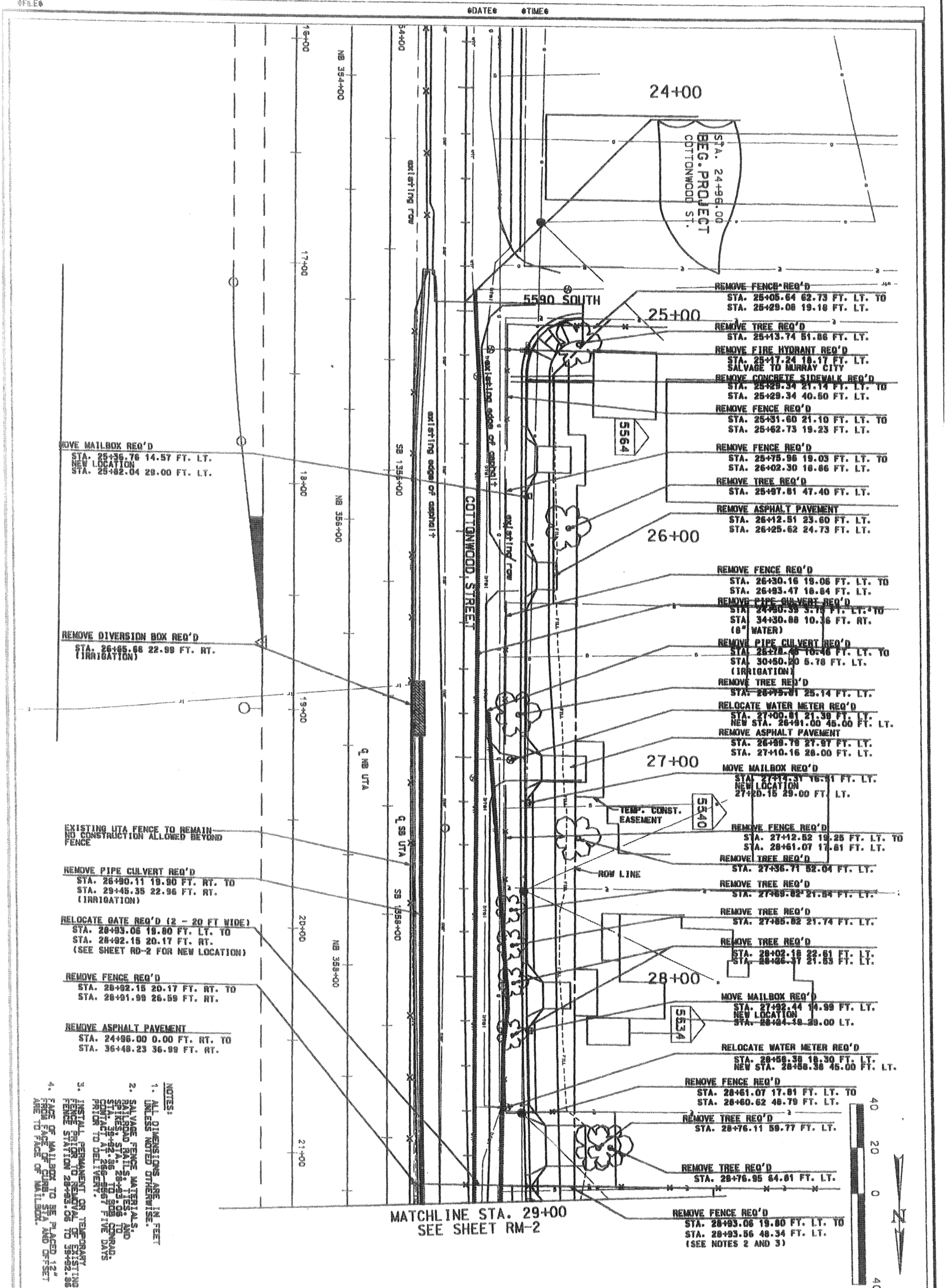

SALT LAKE COUNTY	COTTONWOOD STREET 5600 SOUTH TO VINE STREET REMOVAL SHEET	MURRAY CITY CORPORATION DEPARTMENT OF PUBLIC SERVICES -- ENGINEERING DIVISION 4646 SOUTH 500 WEST, MURRAY UT, 84123 - (801) 270-2400	RELEASE FOR CONSTRUCTION
PROJECT NUMBER	*HPP-STP-2148(1)0	APPROVAL RECOMM. DATE DESIGN ENGINEER APPROVED DATE PROJECT MANAGER DESIGN BJ 5/03 CHECK DTP 5/03 QA AUDIT DRAWN BJ 5/03 CHECK DTP 5/03 DATE QUANT. BJ 10/03 CHECK DTP 10/03 BY	NO. DATE DESCRIPTION

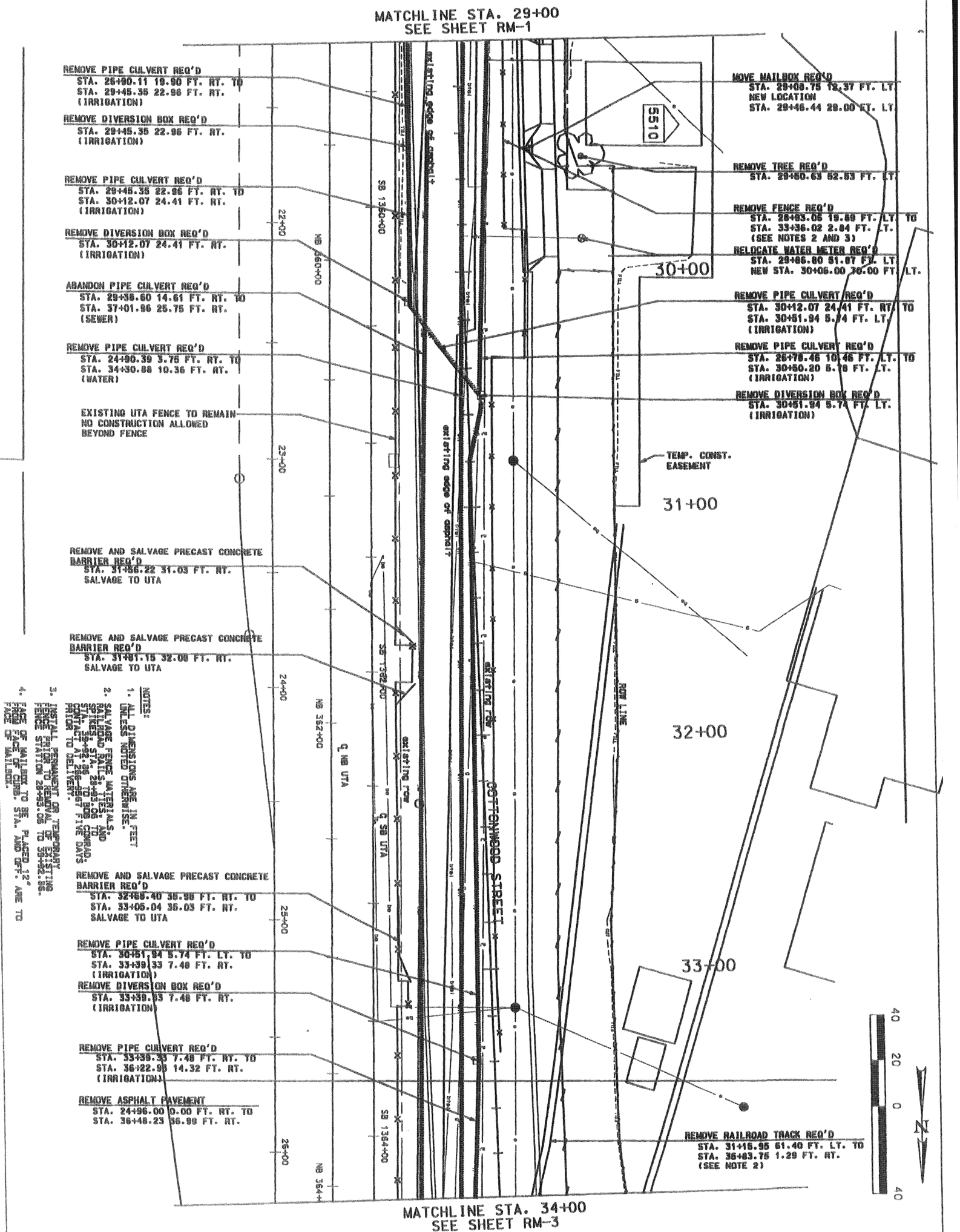

SHEET NO. RM-2	COTTONWOOD STREET 5600 SOUTH TO VINE STREET REMOVAL SHEET	MURRAY CITY CORPORATION DEPARTMENT OF PUBLIC SERVICES — ENGINEERING DIVISION 4646 SOUTH 500 WEST, MURRAY UT. 84123 - (801) 270-2400		RELEASE FOR CONSTRUCTION NO. / DATE / DESCRIPTION
SALT LAKE COUNTY	PROJECT NUMBER *HPP-STP-2148(1)0	APPROVAL RECOMM. DATE DESIGN ENGINEER APPROVED DATE PROJECT MANAGER	DESIGN BJ 5/03 CHECK DTP 5/03 DRAWN BJ 5/03 CHECK DTP 5/03 QUANT. BJ 10/03 CHECK DTP 10/03	QA AUDIT DATE BY

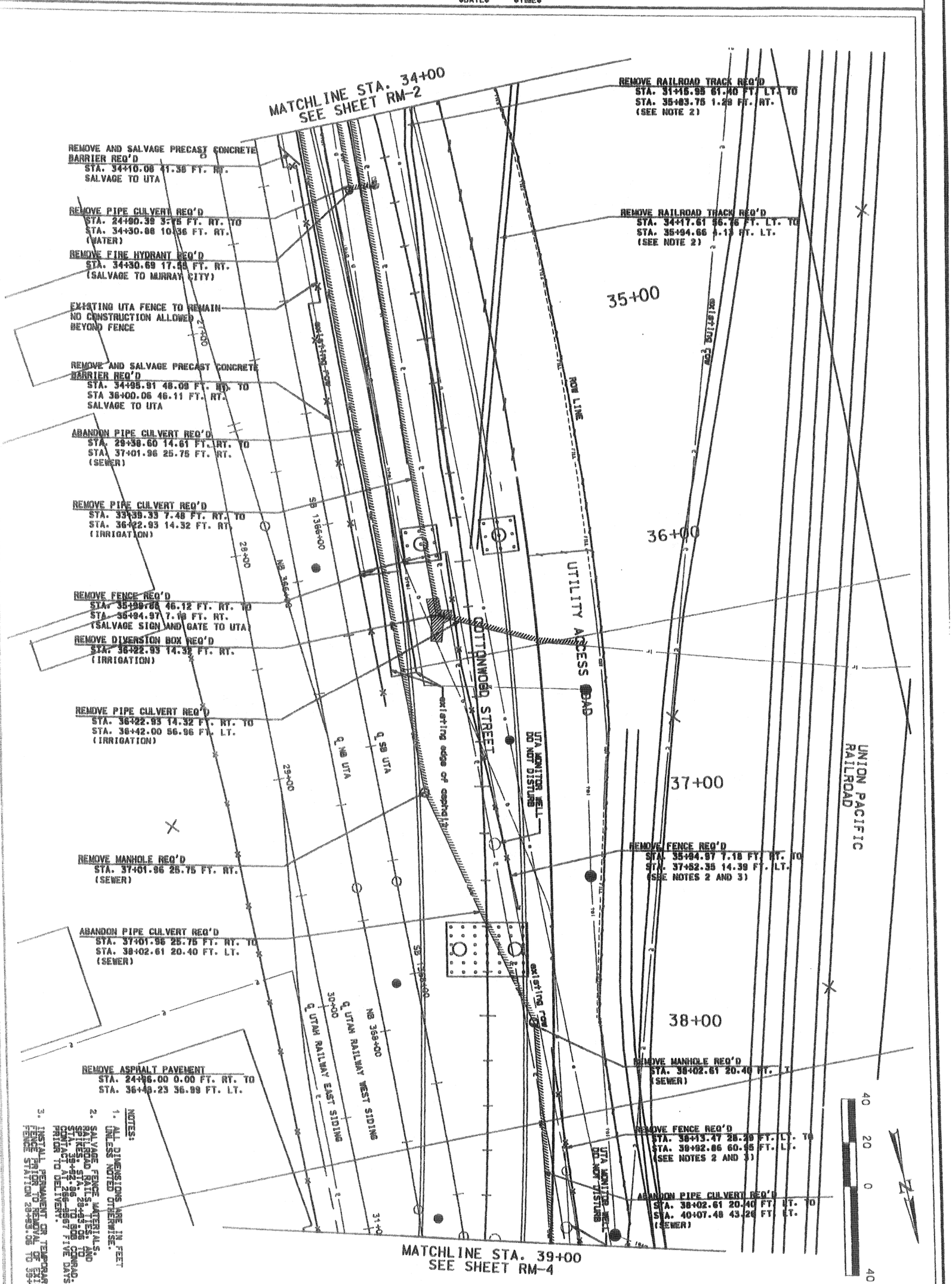

SALT LAKE COUNTY	COTTONWOOD STREET 5600 SOUTH TO VINE STREET REMOVAL SHEET PROJECT NUMBER *HPP-STP-2148(1)0	MURRAY CITY CORPORATION DEPARTMENT OF PUBLIC SERVICES -- ENGINEERING DIVISION 4646 SOUTH 500 WEST, MURRAY UT, 84123 - (801) 270-2400 APPROVAL RECOMM. DATE DESIGN ENGINEER APPROVED DATE PROJECT MANAGER DESIGN BJ 5/03 CHECK DTP 5/03 QA AUDIT DRAWN BJ 5/03 CHECK DTP 5/03 DATE QUANT. BJ 10/03 CHECK DTP 10/03 BY	RELEASE FOR CONSTRUCTION NO. DATE DESCRIPTION		

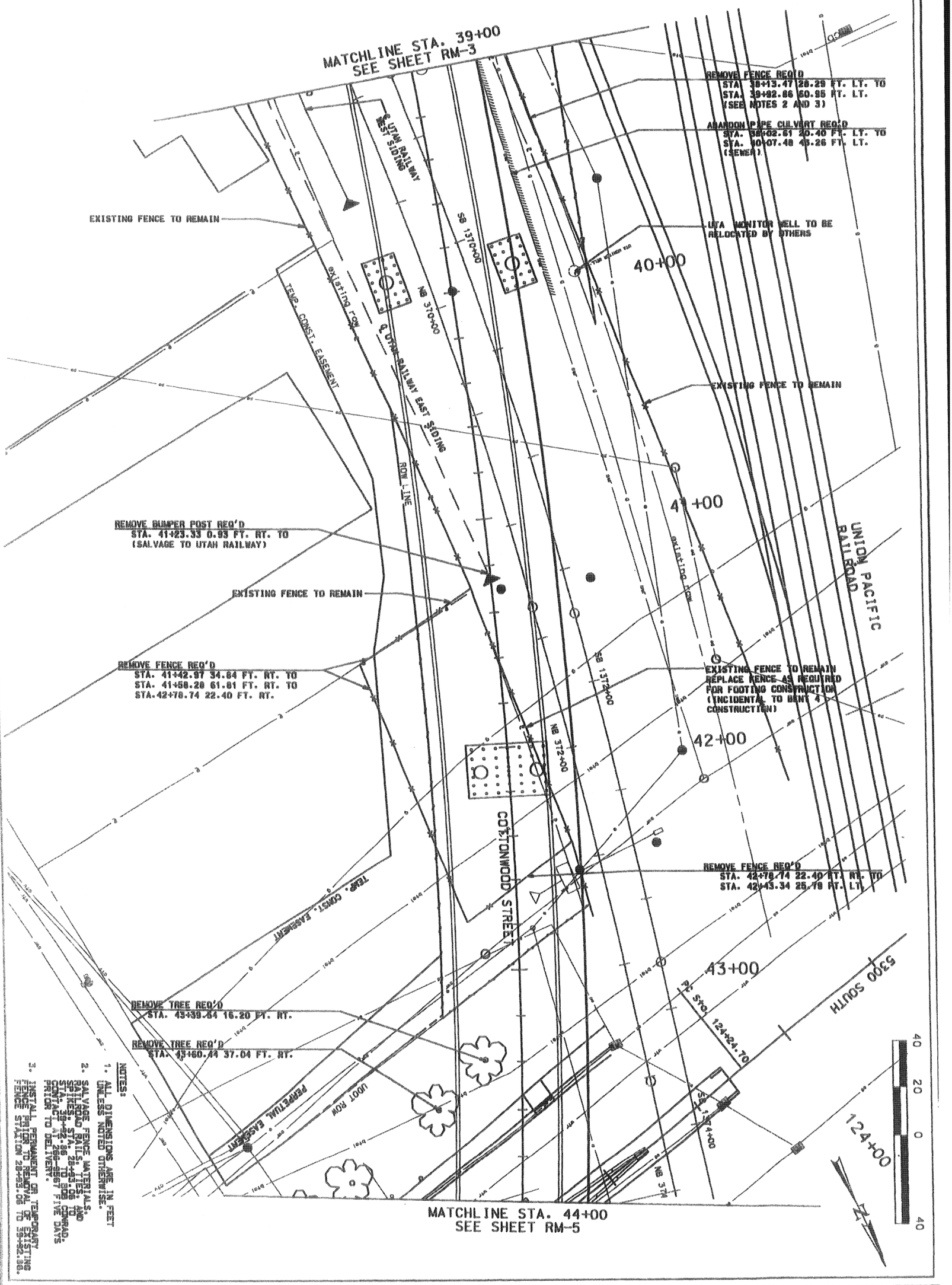

NOTES:

1. ALL DIMENSIONS ARE IN FEET UNLESS NOTED OTHERWISE.
2. SALVAGE FENCE MATERIALS, RAILROAD RAILS, TIES, AND SPIKES, STA. 38+13.06 TO STA. 39+82.86 TO UNION PACIFIC RAILROAD. CONTACT TO DELIVER: 801-975-5167 FIVE DAYS PRIOR TO DELIVERY.
3. INSTALL PERMANENT OR TEMPORARY FENCE PRIOR TO REMOVAL OF EXISTING FENCE STATION 38+13.06 TO 39+82.86.

SHEET NO. RM-4	SALT LAKE COUNTY	COTTONWOOD STREET 5600 SOUTH TO VINE STREET REMOVAL SHEET PROJECT NUMBER *HPP-STP-2148(1)0	MURRAY CITY CORPORATION DEPARTMENT OF PUBLIC SERVICES — ENGINEERING DIVISION 4646 SOUTH 500 WEST, MURRAY UT, 84123 - (801) 270-2400 APPROVAL RECOMM. ____ DATE ____ DESIGN ENGINEER APPROVED ____ DATE ____ PROJECT MANAGER	DESIGN BJ 5/03 CHECK DTP 5/03 QA AUDIT DRAWN BJ 5/03 CHECK DTP 5/03 DATE QUANT. BJ 5/03 CHECK DTP 10/03 BY	RELEASE FOR CONSTRUCTION NO. / DATE / DESCRIPTION		

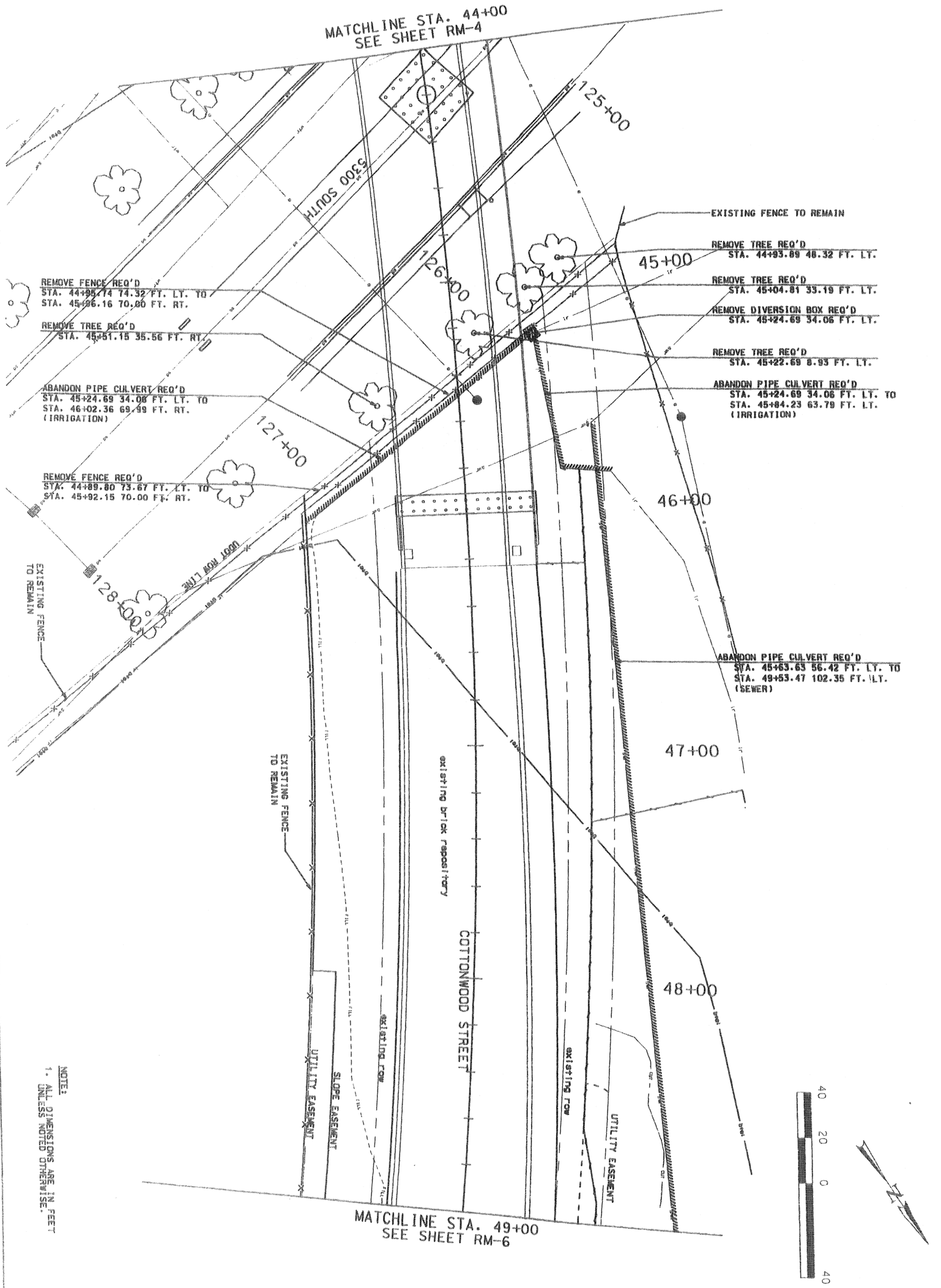

NOTE:
1. ALL DIMENSIONS ARE IN FEET UNLESS NOTED OTHERWISE.

SALT LAKE COUNTY	COTTONWOOD STREET 5600 SOUTH TO VINE STREET REMOVAL SHEET PROJECT NUMBER *HPP-STP-2148(1)0	MURRAY CITY CORPORATION DEPARTMENT OF PUBLIC SERVICES -- ENGINEERING DIVISION 4646 SOUTH 500 WEST, MURRAY UT, 84123 - (801) 270-2400 APPROVAL RECOMM. DATE DESIGN ENGINEER APPROVED DATE PROJECT MANAGER	DESIGN BJ 5/03 CHECK DTP 5/03 DRAFT BJ 5/03 CHECK DTP 5/03 QUANT. BJ 5/03 CHECK DTP 10/03	QA AUDIT DATE BY	RELEASE FOR CONSTRUCTION NO. DATE DESCRIPTION

MATCHLINE STA. 49+00
SEE SHEET RM-5

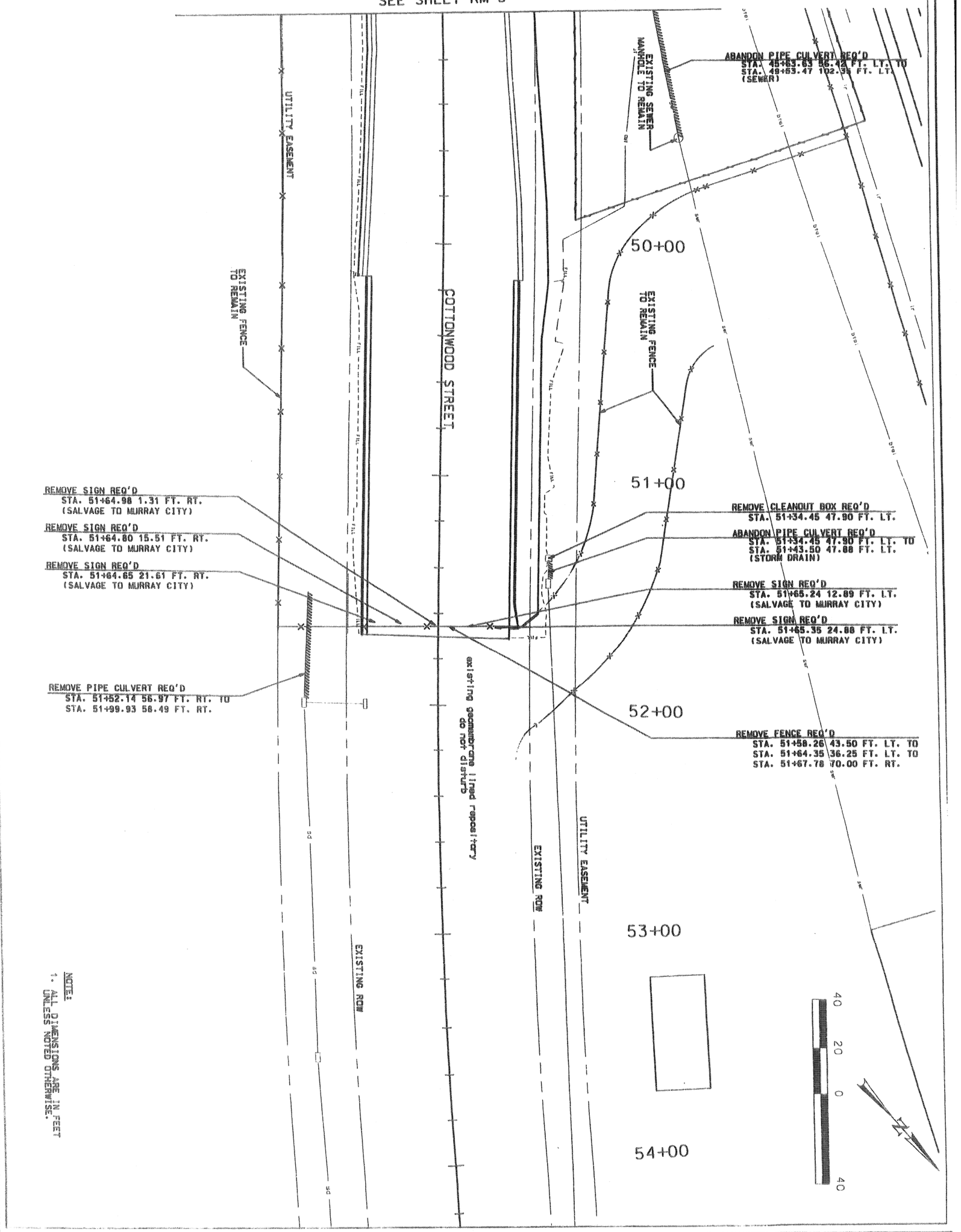

NOTE:
1. ALL DIMENSIONS ARE IN FEET UNLESS NOTED OTHERWISE.

SALT LAKE COUNTY	COTTONWOOD STREET 5600 SOUTH TO VINE STREET REMOVAL SHEET PROJECT NUMBER *HPP-STP-2148(1)0	MURRAY CITY CORPORATION DEPARTMENT OF PUBLIC SERVICES -- ENGINEERING DIVISION 4646 SOUTH 500 WEST, MURRAY UT, 84123 - (801) 270-2400 APPROVAL RECOMM. DATE DESIGN ENGINEER APPROVED DATE PROJECT MANAGER	DESIGN BJ 5/03 CHECK DTP 5/03 QA AUDIT DRAWN BJ 5/03 CHECK DTP 5/03 DATE QUANT. BJ 5/03 CHECK DTP 10/03 BY	RELEASE FOR CONSTRUCTION NO. DATE DESCRIPTION		

$FILE$ $DATE$ $TIME$

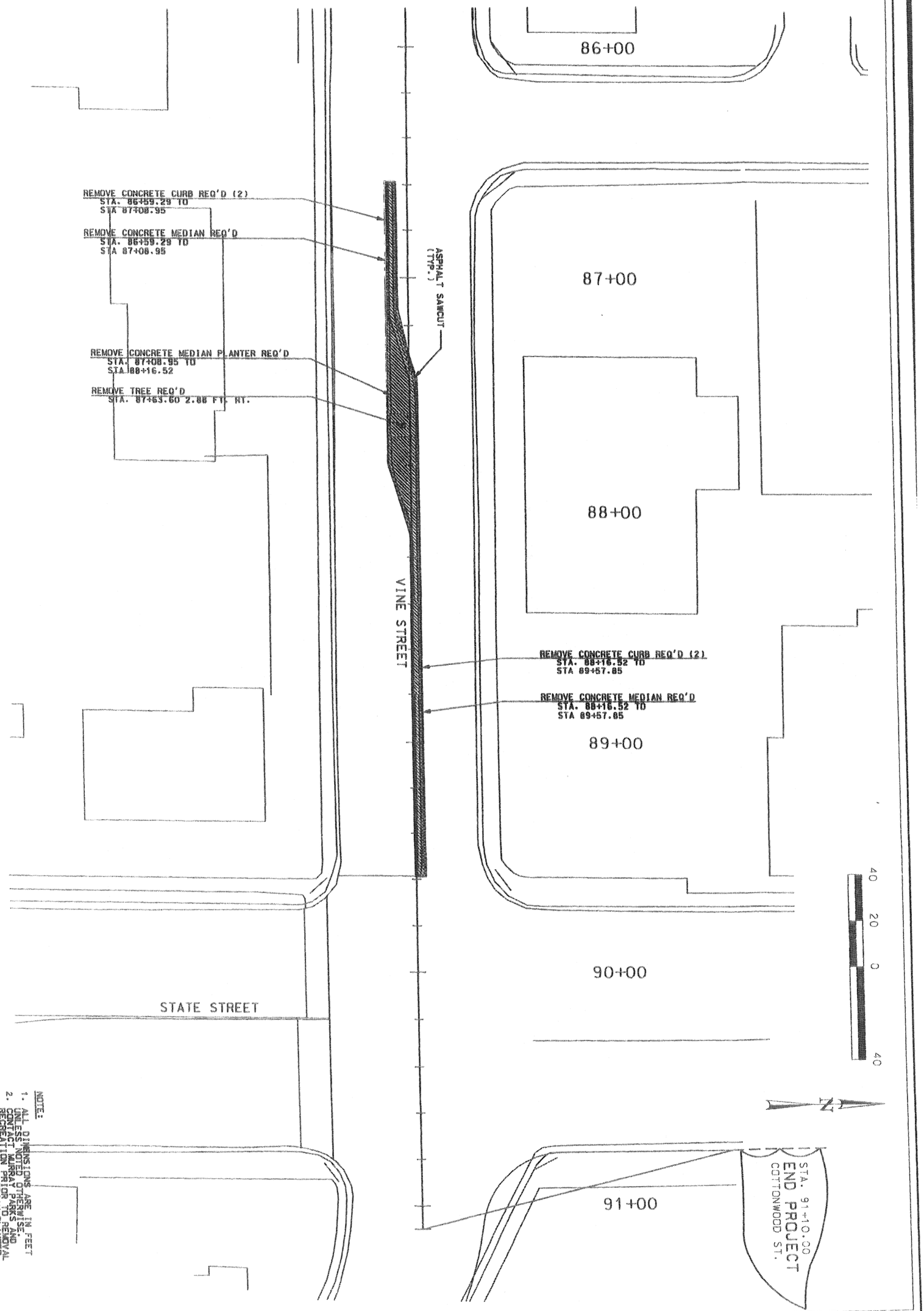

NOTE:
1. ALL DIMENSIONS ARE IN FEET (UNLESS NOTED OTHERWISE.
2. CONTACT MURRAY PARKS AND RECREATION PRIOR TO REMOVAL OF CONCRETE MEDIAN PLANTER. SALVAGE TRIM STONE AS DIRECTED BY MURRAY PARKS AND RECREATION.

SALT LAKE COUNTY

COTTONWOOD STREET
5600 SOUTH TO VINE STREET
REMOVAL SHEET

PROJECT NUMBER *HPP-STP-2148(1)0

MURRAY CITY CORPORATION
DEPARTMENT OF PUBLIC SERVICES -- ENGINEERING DIVISION
4646 SOUTH 500 WEST, MURRAY UT, 84123 - (801) 270-2400

APPROVAL RECOMM. _____ DATE _____ DESIGN ENGINEER
APPROVED _____ DATE _____ PROJECT MANAGER

DESIGN	BJ	5/03	CHECK DTP 5/03	QA AUDIT
DRAWN	BJ	5/03	CHECK DTP 5/03	DATE
QUANT.	BJ	5/03	CHECK DTP 10/03	BY

RELEASE FOR CONSTRUCTION

NO.	DATE	DESCRIPTION

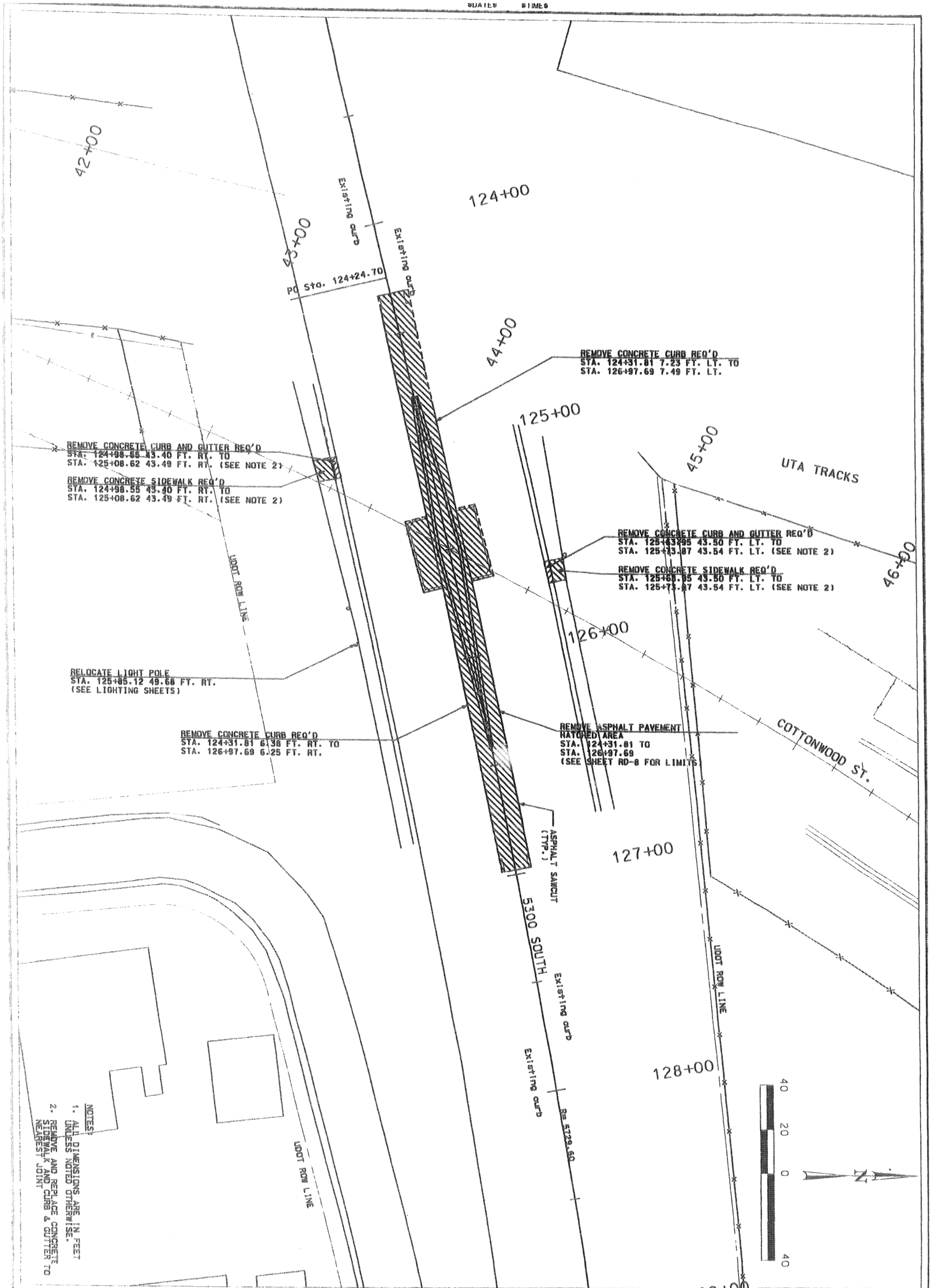

SALT LAKE COUNTY	COTTONWOOD STREET 5600 SOUTH TO VINE STREET REMOVAL SHEET PROJECT NUMBER *HPP-STP-2148(1)0	MURRAY CITY CORPORATION DEPARTMENT OF PUBLIC SERVICES -- ENGINEERING DIVISION 4646 SOUTH 500 WEST, MURRAY UT, 84123 - (801) 270-2400 APPROVAL RECOMM. ____ DATE ____ DESIGN ENGINEER APPROVED ____ DATE ____ PROJECT MANAGER	DESIGN BJ 6/03 CHECK DTP 7/03 QA AUDIT DRAWN BJ 6/03 CHECK DTP 7/03 DATE QUANT. BJ 6/03 CHECK DTP 10/03 BY	RELEASE FOR CONSTRUCTION NO. / DATE / DESCRIPTION

SHEET NO. RM-9

NOTES:

1. ESTIMATED SETTLEMENT TIME IS 6 MONTHS. SURCHARGE TO BE REMOVED AT THE DIRECTION OF THE GEOTECHNICAL ENGINEER.
2. PLACE SURCHARGE 8 FEET ABOVE PGL ELEVATION WHICH IS EQUAL TO 10 FEET ABOVE SUBGRADE.

RELEASE FOR CONSTRUCTION

NO.	DATE	DESCRIPTION

MURRAY CITY CORPORATION
DEPARTMENT OF PUBLIC SERVICES -- ENGINEERING DIVISION
4646 SOUTH 500 WEST, MURRAY UT, 84123 -- (801) 270-2400

DESIGN	ERS	10/03	QA AUDIT
DRAWN	ERS	10/03	DATE
QUANT.	ERS	10/03	BY
CHECK	DTP	10/03	
CHECK	DTP	10/03	
CHECK	DTP	10/03	

APPROVAL RECOMMENDED — DESIGN ENGINEER — DATE
APPROVED — PROJECT MANAGER — DATE

COTTONWOOD STREET
5600 SOUTH TO VINE STREET
NORTH SURCHARGE PLAN

PROJECT NUMBER *HPP-STP-2148(1)0

SALT LAKE COUNTY

SHEET NO. GR-01

$DATE$ $TIME$
$FILES$

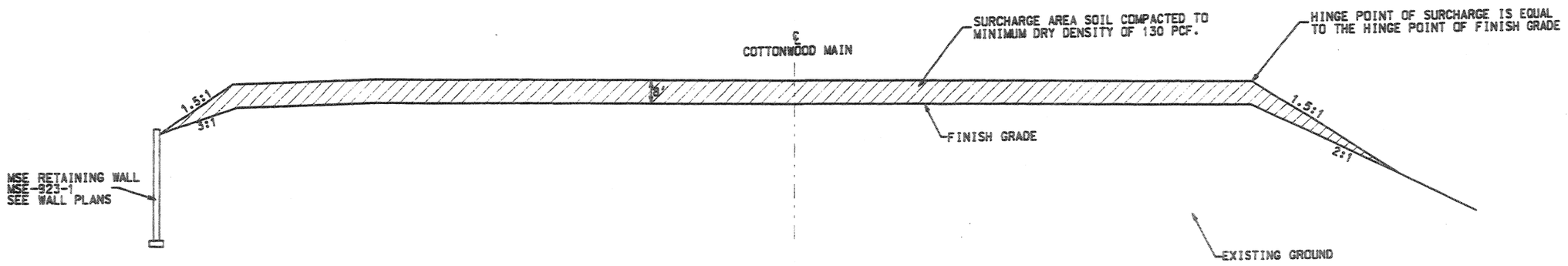

NORTH SURCHARGE TYPICAL SECTION A-A

COTTONWOOD STREET
STA. 45+51.00 TO STA. 48+70.00

NOTES:

1. ESTIMATED SETTLEMENT TIME IS 6 MONTHS. SURCHARGE TO BE REMOVED AT THE DIRECTION OF THE GEOTECHNICAL ENGINEER.
2. PLACE SURCHARGE 8 FEET ABOVE PGL ELEVATION WHICH IS EQUAL TO 10 FEET ABOVE SUBGRADE.
3. PLACE MSE PANELS ONLY AFTER SURCHARGE IS REMOVED.

RELEASE FOR CONSTRUCTION

NO.	DATE	DESCRIPTION

MURRAY CITY CORPORATION
DEPARTMENT OF PUBLIC SERVICES -- ENGINEERING DIVISION
4646 SOUTH 500 WEST, MURRAY UT, 84123 -- (801) 270-2400

DESIGN	EBS	10-03	CHECK DTP 10-03	QA AUDIT
DRAWN	EBS	10-03	CHECK DTP 10-03	DATE
QUANT.	EBS	10-03	CHECK DTP 10-03	BY

APPROVAL RECOMM. ____ DATE ____ DESIGN ENGINEER
APPROVED ____ DATE ____ PROJECT MANAGER

COTTONWOOD STREET
5600 SOUTH TO VINE STREET
SURCHARGE TYPICAL SECTION
PROJECT NUMBER *HPP-STP-2148(1)0

SALT LAKE COUNTY

SHEET NO. 08-02

@DATE@ @TIME@
@FILE@

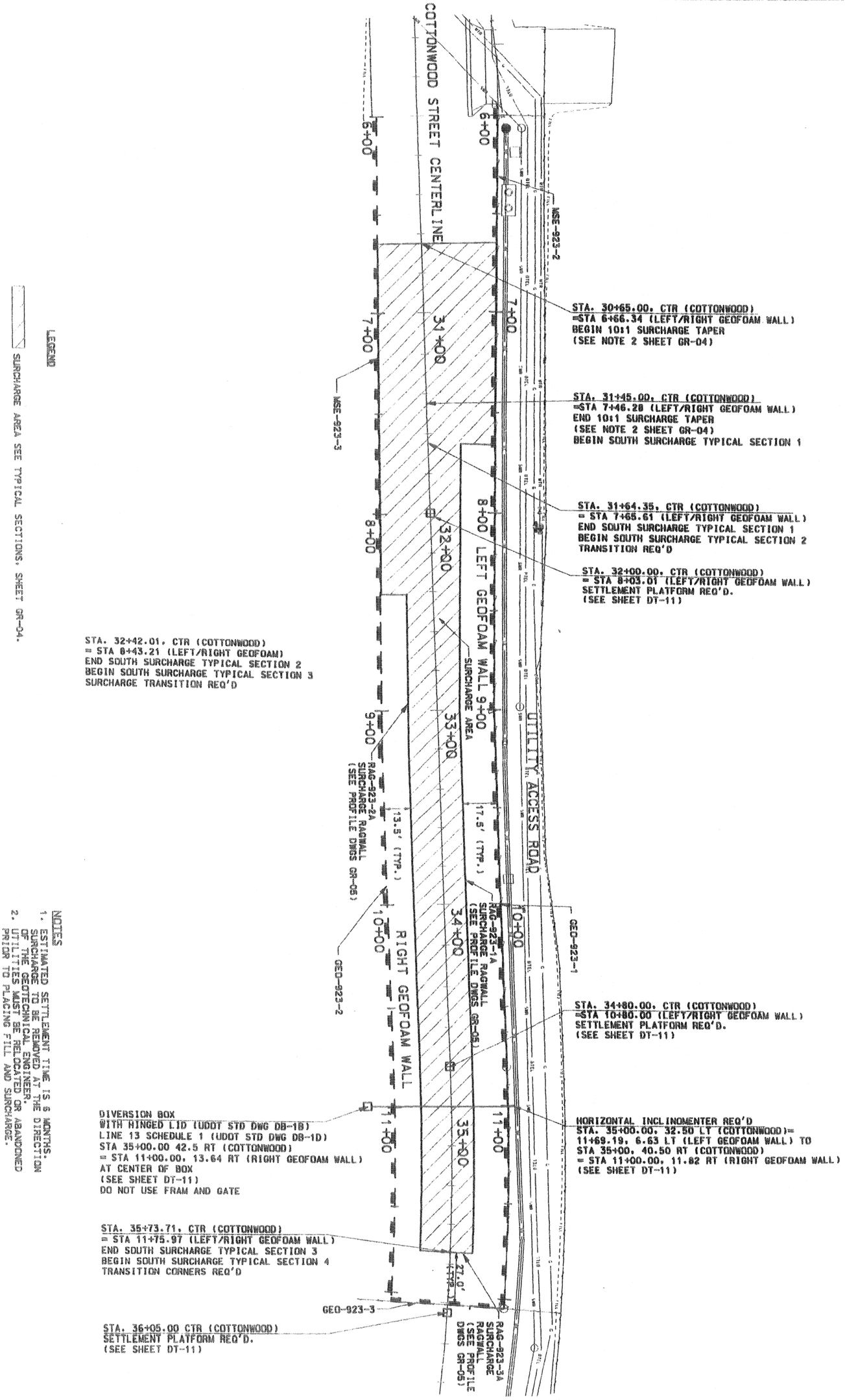

SALT LAKE COUNTY	COTTONWOOD STREET 5600 SOUTH TO VINE STREET SOUTH SURCHARGE PLAN PROJECT NUMBER *HPP-STP-2148(1)0	MURRAY CITY CORPORATION DEPARTMENT OF PUBLIC SERVICES -- ENGINEERING DIVISION 4646 SOUTH 500 WEST, MURRAY UT, 84123 - (801) 270-2400				RELEASE FOR CONSTRUCTION	
		APPROVAL RECOMM. DATE DESIGN ENGINEER	DESIGN ERS 09-03	CHECK DTP 10-03	QA AUDIT	NO.	DATE / DESCRIPTION
			DRAWN ERS 09-03	CHECK DTP 10-03	DATE		
		APPROVED DATE PROJECT MANAGER	QUANT. ERS 09-03	CHECK DTP 10-03	BY		

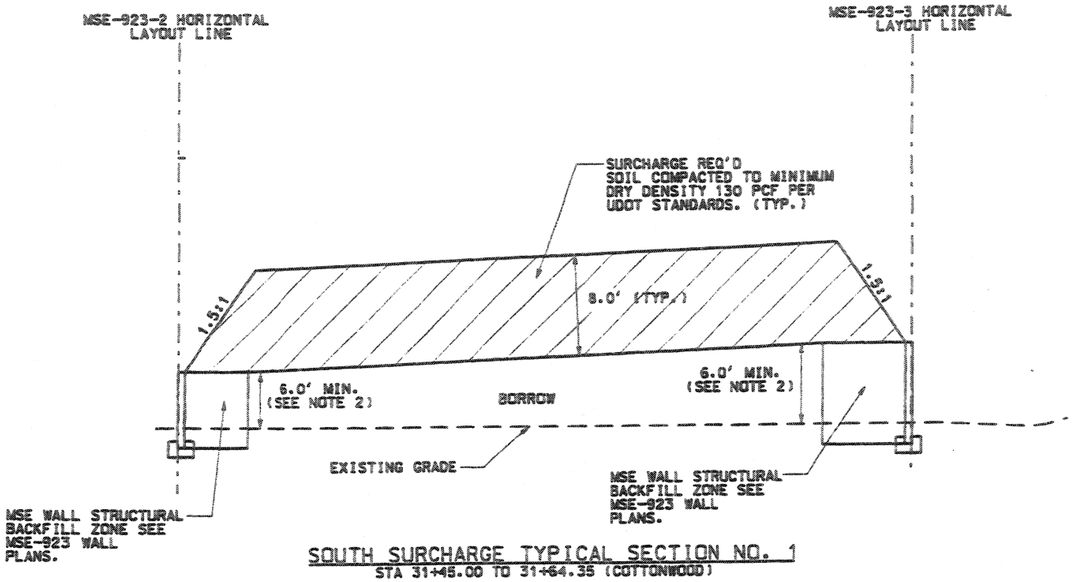

SOUTH SURCHARGE TYPICAL SECTION NO. 1
STA 31+45.00 TO 31+64.35 (COTTONWOOD)

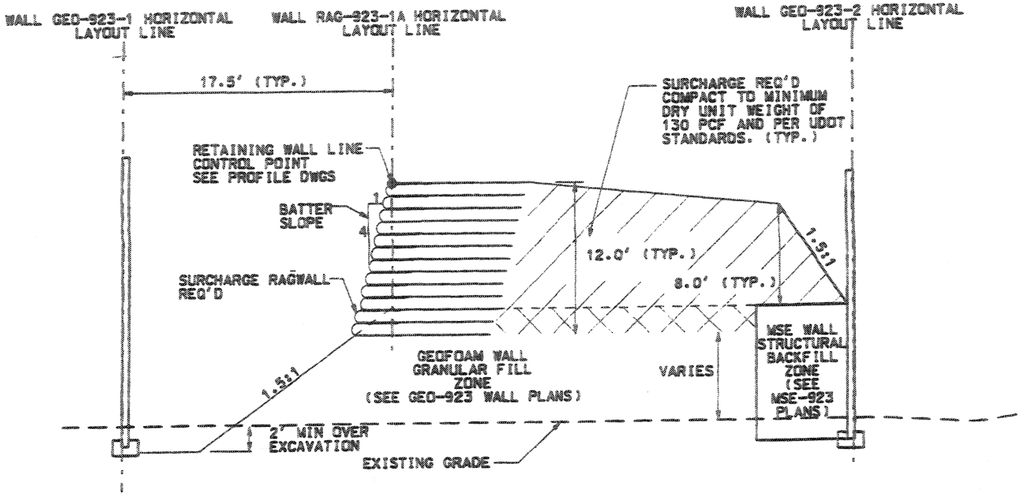

SOUTH SURCHARGE TYPICAL SECTION NO. 2
STA 31+64.35 TO 32+42.01 (COTTONWOOD)

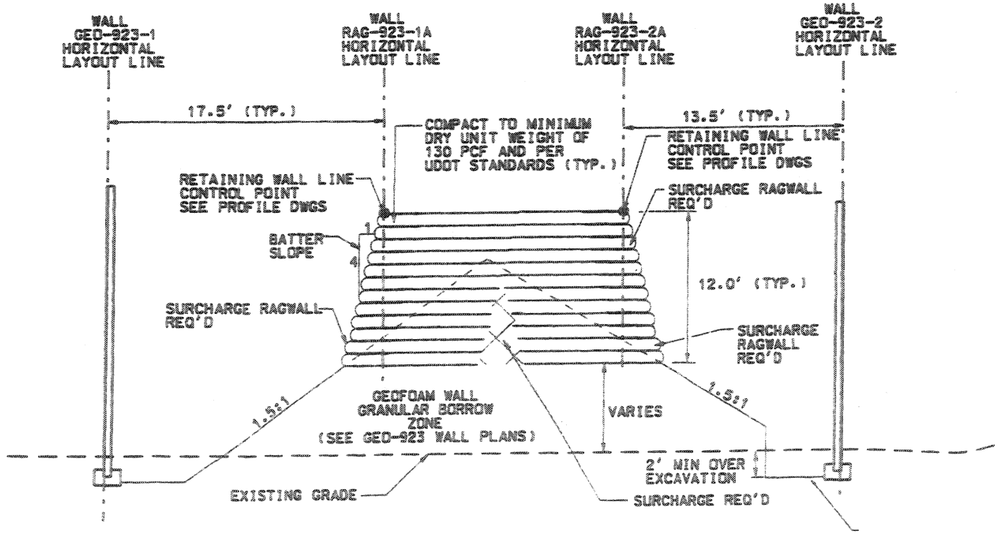

SOUTH SURCHARGE TYPICAL SECTION NO. 3
STA 32+42.01 TO 35+73.71 (COTTONWOOD)

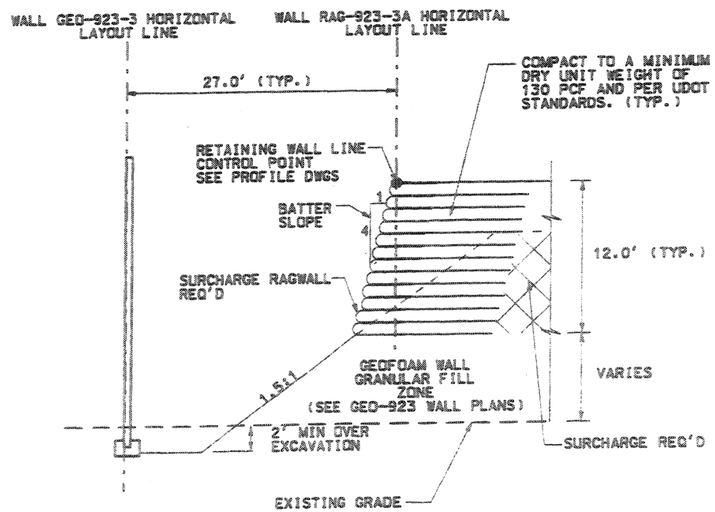

SOUTH SURCHARGE TYPICAL SECTION NO. 4
FACE OF WALL
STA 35+73.71

LEGEND

OVERLAP AREA OF SURCHARGE AND GRANULAR BORROW FOR WALL.

NOTES:

1. USE GEOTEXTILE FABRIC WITH A MINIMUM TENSILE STRENGTH OF 90 LBS. PER INCH.
2. FOR MSE WALLS LESS THAN 6' HIGH. TAPER HEIGHT OF SURCHARGE AT 10:1 FROM 8' TO 0'.

RELEASE FOR CONSTRUCTION

NO.	DATE	DESCRIPTION

MURRAY CITY CORPORATION
DEPARTMENT OF PUBLIC SERVICES -- ENGINEERING DIVISION
4646 SOUTH 500 WEST, MURRAY UT. 84123 - (801) 270-2400

DESIGN ERS	10-03	QA AUDIT	
DRAWN ERS	10-03	CHECK DTP	10-03
QUANT. ERS	10-03	CHECK DTP	10-03
		CHECK DTP	10-03

APPROVAL RECOMM. — DATE — DESIGN ENGINEER
APPROVED — DATE — PROJECT MANAGER

COTTONWOOD STREET
5600 SOUTH TO VINE STREET
SURCHARGE TYPICAL SECTIONS

PROJECT NUMBER *HPP-STP-2148(1)0

SALT LAKE COUNTY

SHEET NO. GR-04

$FILES $DATES $TIMES

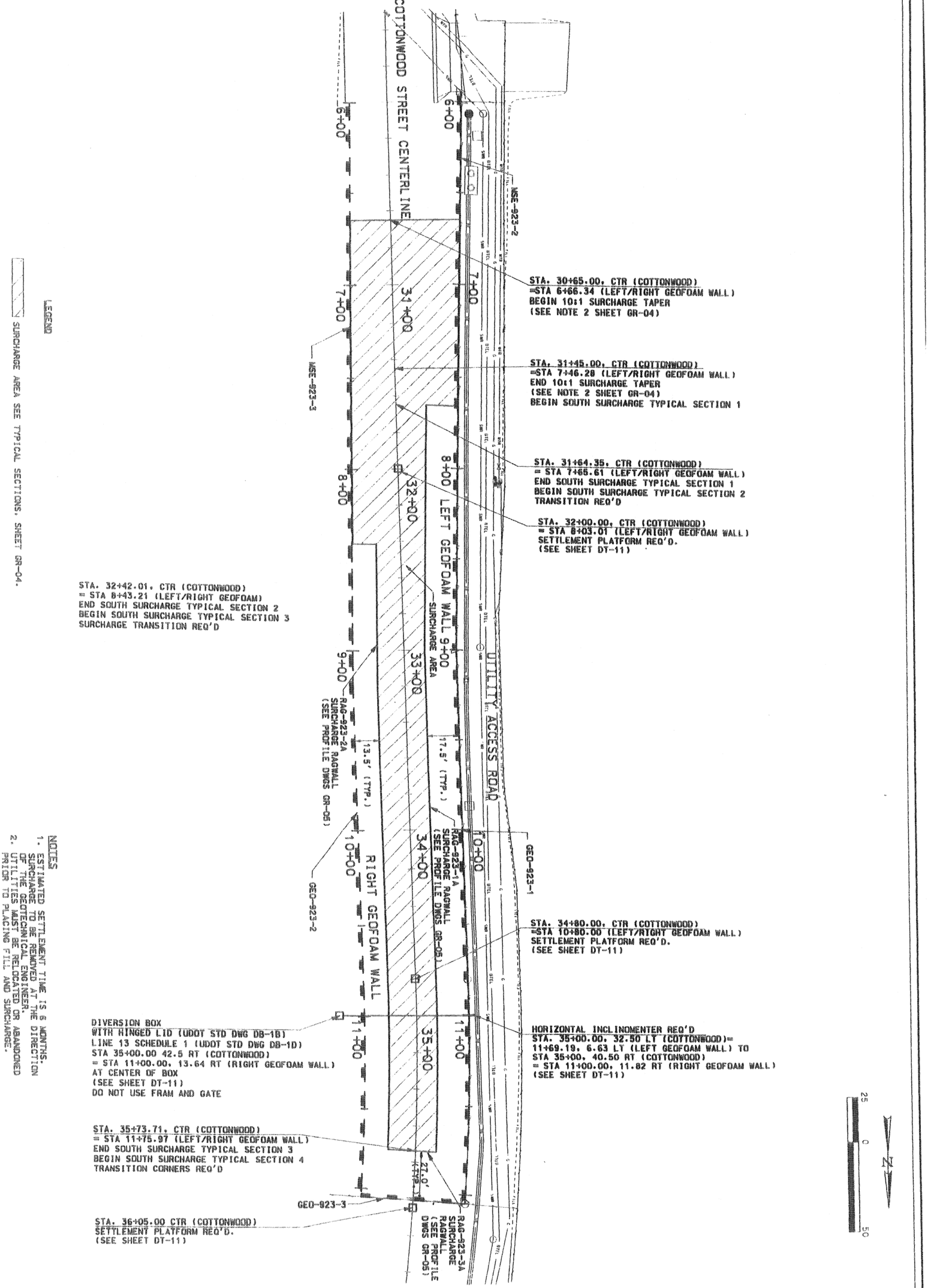

NOTES

1. ESTIMATED SETTLEMENT TIME IS 6 MONTHS. SURCHARGE TO BE REMOVED AT THE DIRECTION OF THE GEOTECHNICAL ENGINEER.
2. UTILITIES MUST BE RELOCATED OR ABANDONED PRIOR TO PLACING FILL AND SURCHARGE.

SALT LAKE COUNTY	COTTONWOOD STREET 5600 SOUTH TO VINE STREET SOUTH SURCHARGE PLAN PROJECT NUMBER *HPP-STP-2148(1)0	MURRAY CITY CORPORATION DEPARTMENT OF PUBLIC SERVICES -- ENGINEERING DIVISION 4646 SOUTH 500 WEST, MURRAY UT, 84123 - (801) 270-2400 APPROVAL RECOMM. DATE DESIGN ENGINEER APPROVED DATE PROJECT MANAGER	DESIGN ERS 09-03 CHECK DTP 10-03 QA AUDIT DRAWN ERS 09-03 CHECK DTP 10-03 DATE QUANT. ERS 09-03 CHECK DTP 10-03 BY	RELEASE FOR CONSTRUCTION		
				NO.	DATE	DESCRIPTION

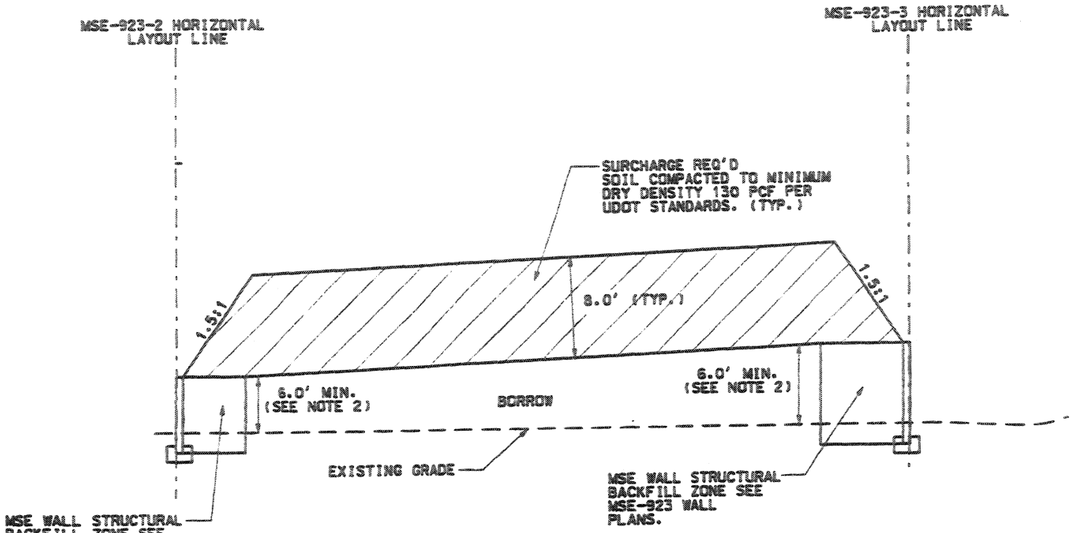

SOUTH SURCHARGE TYPICAL SECTION NO. 1
STA 31+45.00 TO 31+64.35 (COTTONWOOD)

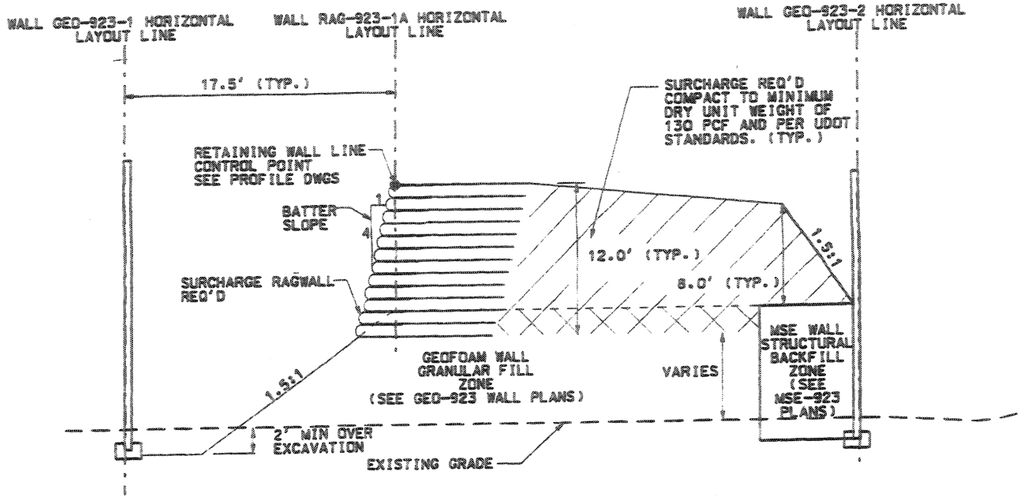

SOUTH SURCHARGE TYPICAL SECTION NO. 2
STA 31+64.35 TO 32+42.01 (COTTONWOOD)

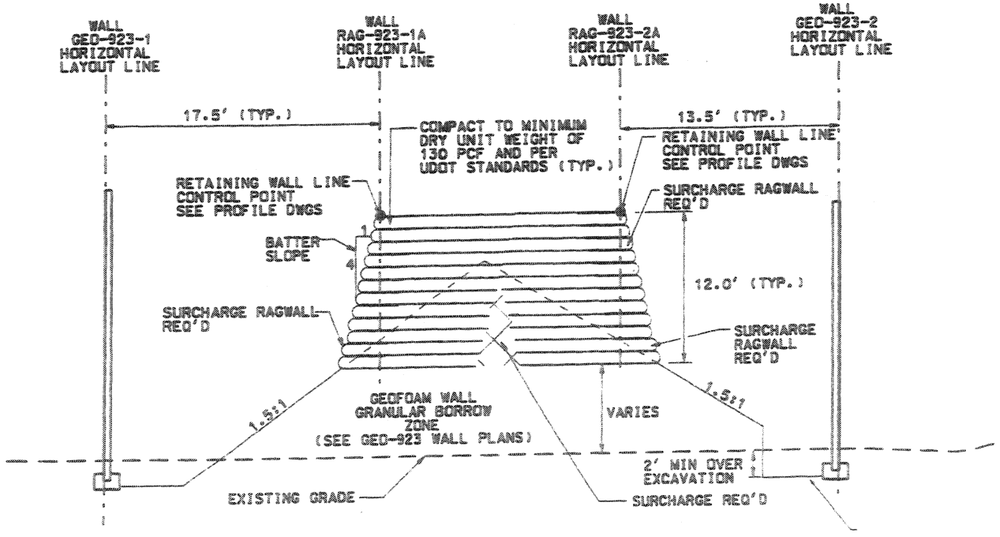

SOUTH SURCHARGE TYPICAL SECTION NO. 3
STA 32+42.01 TO 35+73.71 (COTTONWOOD)

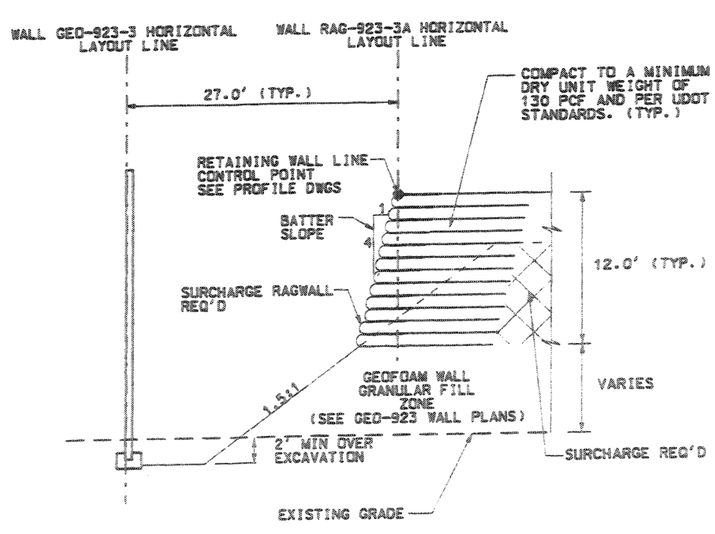

SOUTH SURCHARGE TYPICAL SECTION NO. 4
FACE OF WALL
STA 35+73.71

LEGEND

OVERLAP AREA OF SURCHARGE AND GRANULAR BORROW FOR WALL.

NOTES:

1. USE GEOTEXTILE FABRIC WITH A MINIMUM TENSILE STRENGTH OF 90 LBS. PER INCH.
2. FOR MSE WALLS LESS THAN 6' HIGH. TAPER HEIGHT OF SURCHARGE AT 10:1 FROM 8' TO 0'.

RELEASE FOR CONSTRUCTION

NO.	DATE	DESCRIPTION

MURRAY CITY CORPORATION
DEPARTMENT OF PUBLIC SERVICES -- ENGINEERING DIVISION
4646 SOUTH 500 WEST, MURRAY UT. 84123 -- (801) 270-2400

DESIGN EHS	10-03	CHECK DJP	10-03	QA AUDIT
DRAWN EHS	10-03	CHECK DJP	10-03	DATE
QUANT. EHS	10-03	CHECK DJP	10-03	BY

APPROVAL RECOMM. — DESIGN ENGINEER — DATE
APPROVED — PROJECT MANAGER — DATE

COTTONWOOD STREET
5600 SOUTH TO VINE STREET
SURCHARGE TYPICAL SECTIONS

PROJECT NUMBER *HPP-STP-2148(1)0

SALT LAKE COUNTY

SHEET NO. GR-04

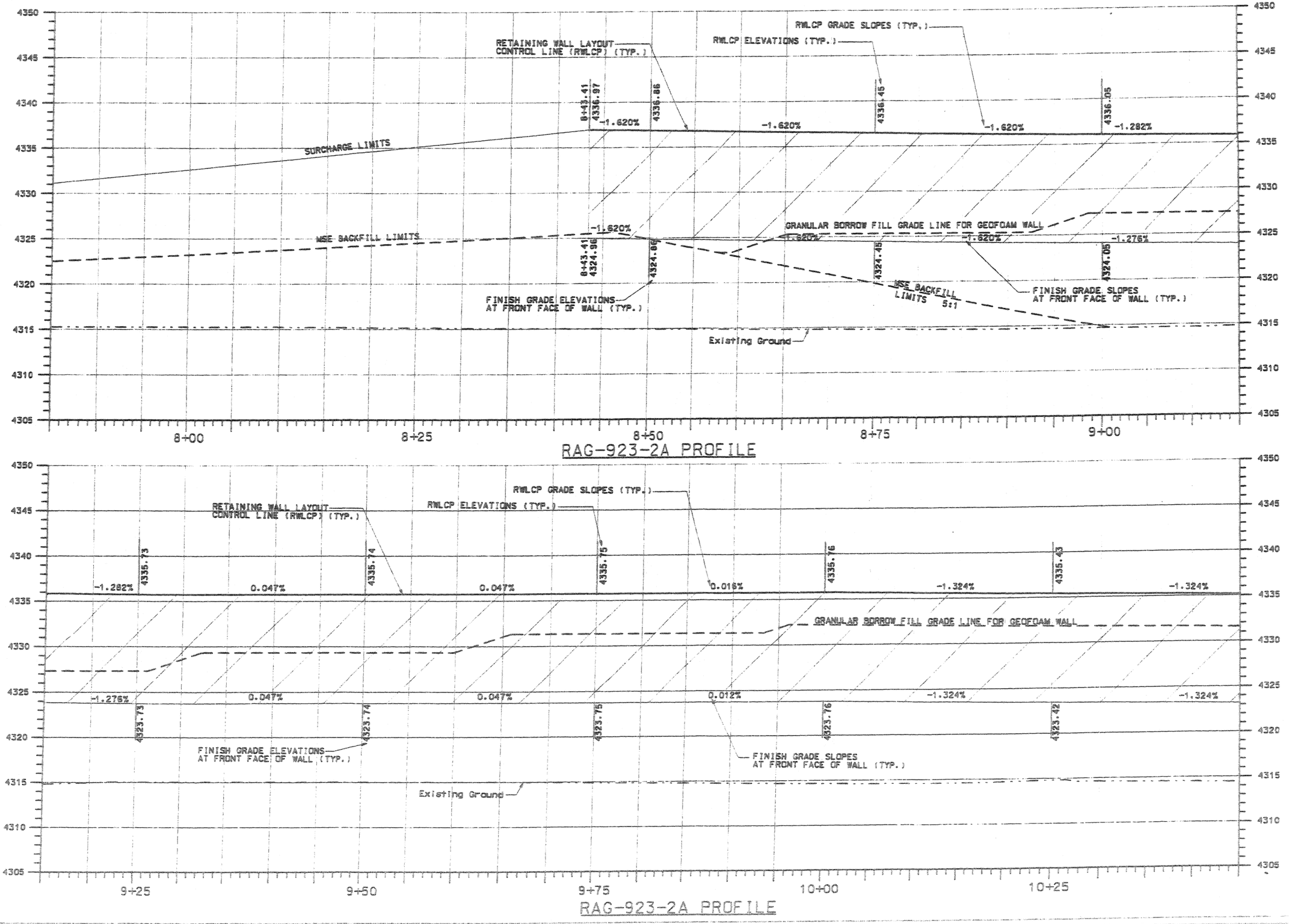

RAG-923-2A PROFILE

RAG-923-2A PROFILE

RELEASE FOR CONSTRUCTION

NO.	DATE	DESCRIPTION

MURRAY CITY CORPORATION
DEPARTMENT OF PUBLIC SERVICES — ENGINEERING DIVISION
4646 SOUTH 500 WEST, MURRAY UT, 84123 — (801) 270-2400

DESIGN	ERS	10-03	QA AUDIT
DRAWN	ERS	10-03	
QUANT.	ERS	10-03	

CHECK	DTP	10-03	DATE
CHECK	DTP	10-03	DATE
CHECK	DTP	10-03	DATE

DESIGN ENGINEER ____ DATE ____
PROJECT MANAGER ____ DATE ____
APPROVAL RECOMM. ____ DATE ____
APPROVED ____ DATE ____

COTTONWOOD STREET
5600 SOUTH TO VINE STREET
SURCHARGE RAGWALL PROFILE
PROJECT NUMBER *HPP-STP-2148(110)
SALT LAKE COUNTY
SHEET NO. GR-05

$DATE$ $TIME$
$FILES

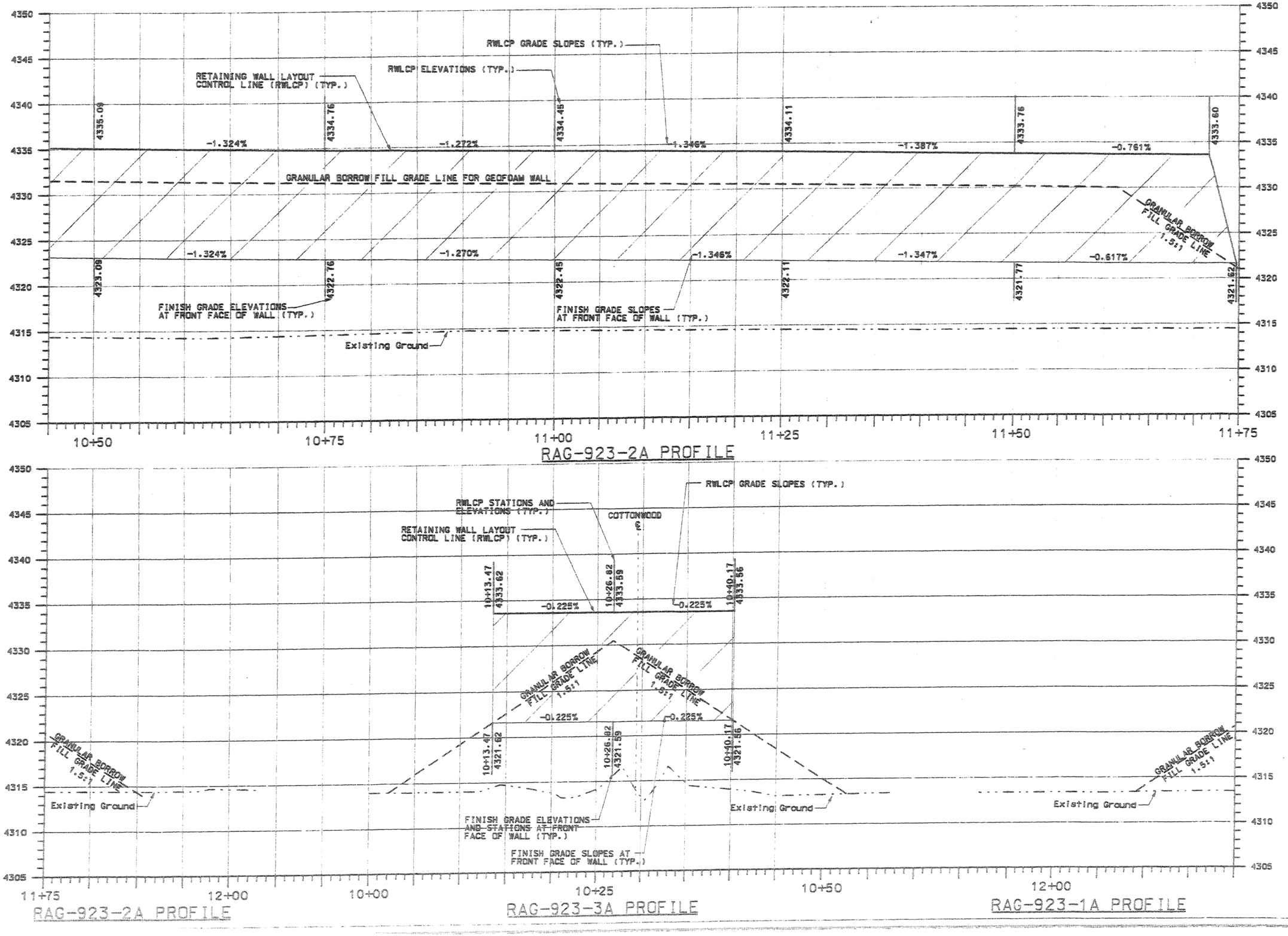

RELEASE FOR CONSTRUCTION

NO.	DATE	DESCRIPTION

MURRAY CITY CORPORATION
DEPARTMENT OF PUBLIC SERVICES -- ENGINEERING DIVISION
4646 SOUTH 500 WEST, MURRAY UT. 84123 - (801) 270-2400

DESIGN ERS 10-03	CHECK DTP 10-03	QA AUDIT	
DRAWN ERS 10-03	CHECK DTP 10-03	DATE	
QUANT. ERS 10-03	CHECK DTP 10-03	BY	

APPROVAL RECOMM. DATE ____ DESIGN ENGINEER
APPROVED DATE ____ PROJECT MANAGER

COTTONWOOD STREET
5600 SOUTH TO VINE STREET
SURCHARGE RAGWALL PROFILE

PROJECT NUMBER *HPP-STP-2148(1)0

SALT LAKE COUNTY

SHEET NO. GR-06

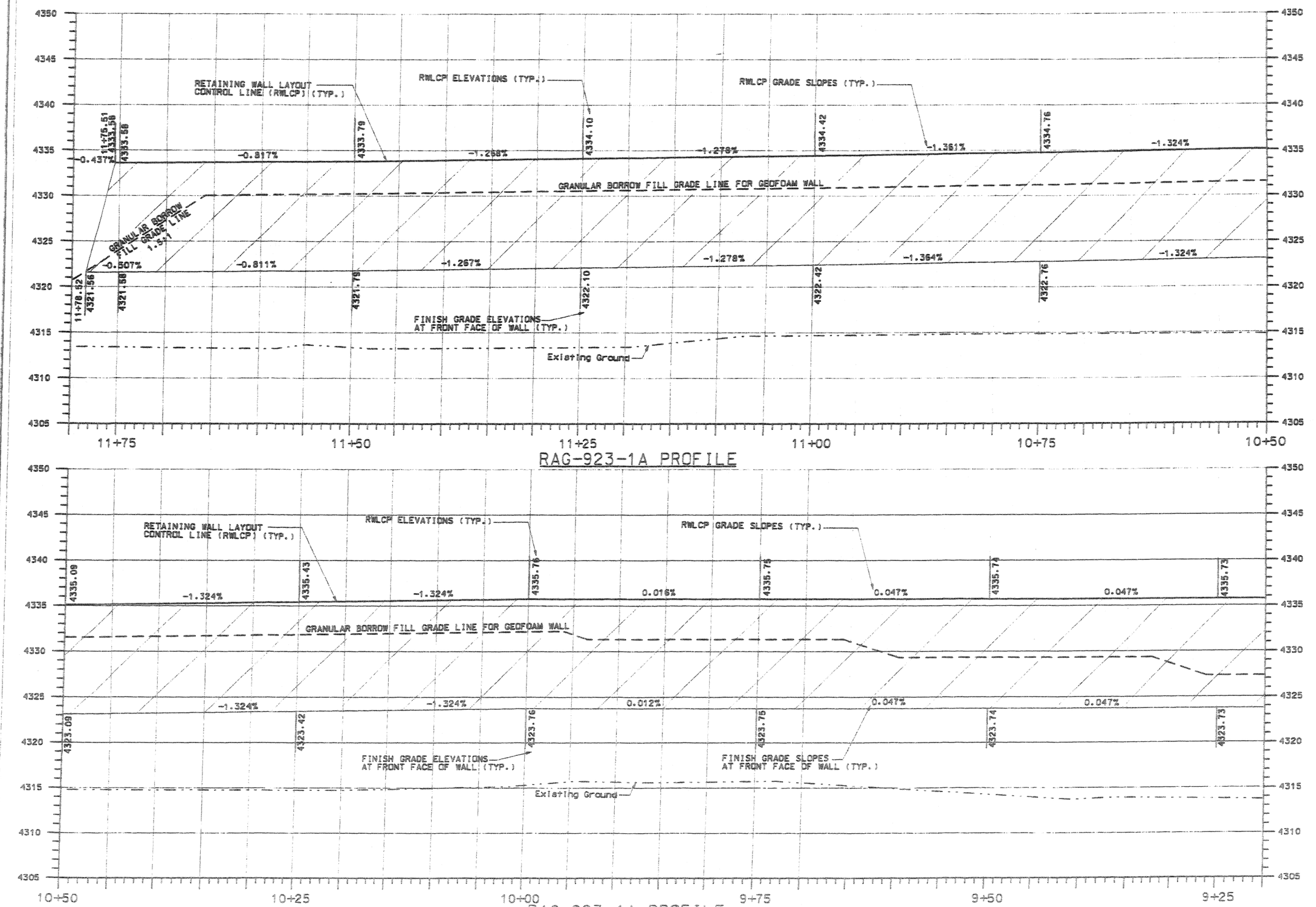

RELEASE FOR CONSTRUCTION

NO.	DATE	DESCRIPTION

MURRAY CITY CORPORATION
DEPARTMENT OF PUBLIC SERVICES -- ENGINEERING DIVISION
4646 SOUTH 500 WEST, MURRAY UT. 84123 - (801) 270-2400

DESIGN ERS 10-03	DRAWN ERS 10-03	QUANT. ERS 10-03	CHECK DTP 10-03	QA AUDIT
APPROVAL RECOMM. DATE	DESIGN ENGINEER		CHECK DTP 10-03	DATE
APPROVED DATE	PROJECT MANAGER		CHECK DTP 10-03	BY

COTTONWOOD STREET
5600 SOUTH TO VINE STREET
SURCHARGE RAGWALL PROFILE

PROJECT NUMBER *HPP-STP-2148(1)0

SALT LAKE COUNTY

SHEET NO. 88-07

$DATE$ $TIME$
$FILE$

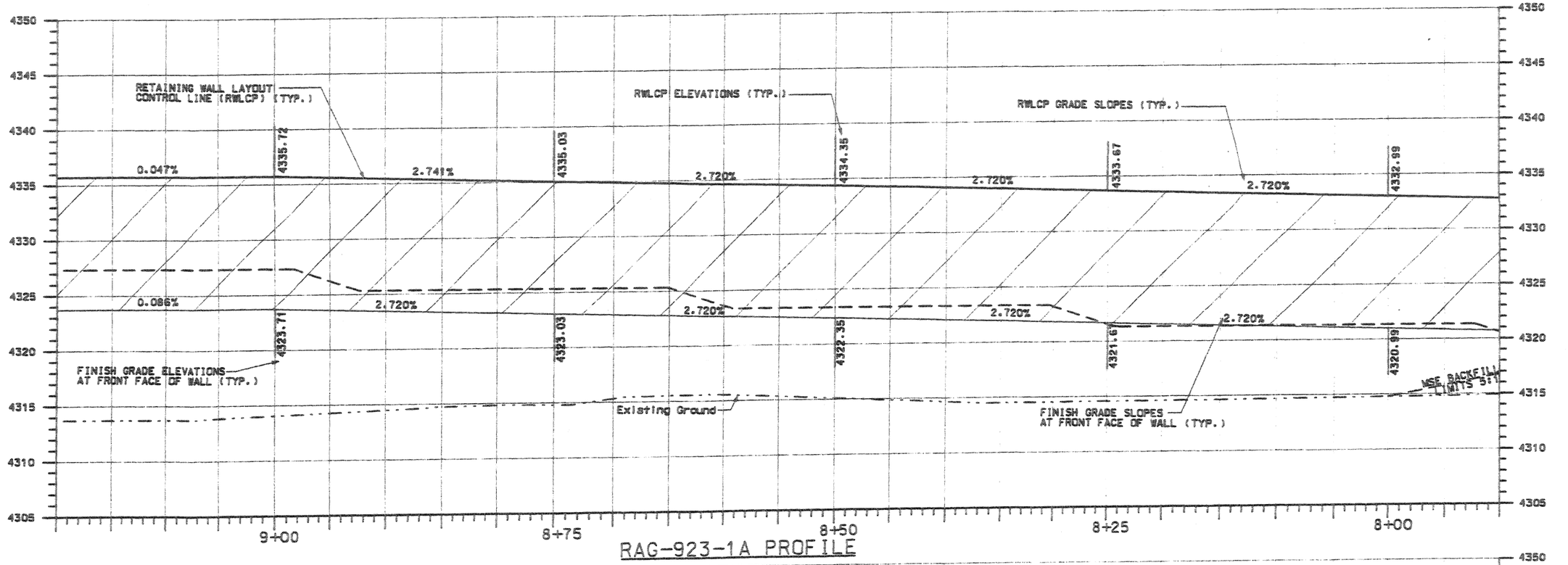

RAG-923-1A PROFILE

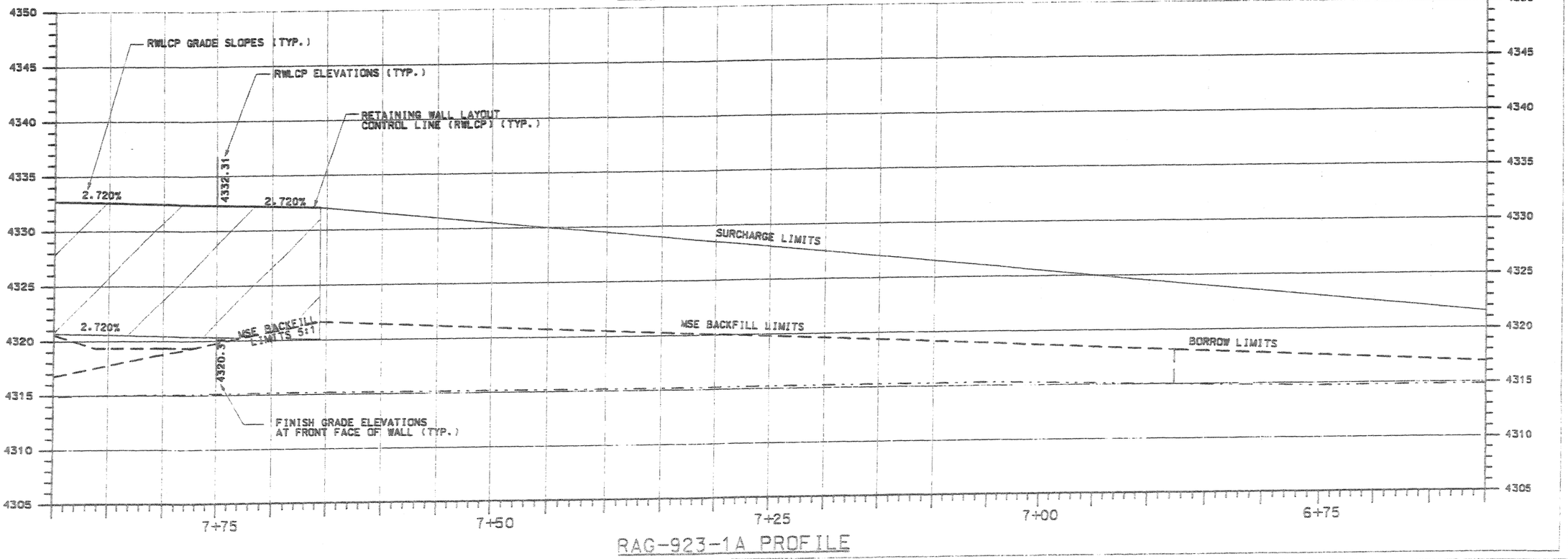

RAG-923-1A PROFILE

RELEASE FOR CONSTRUCTION

NO.	DATE	DESCRIPTION

MURRAY CITY CORPORATION
DEPARTMENT OF PUBLIC SERVICES -- ENGINEERING DIVISION
4646 SOUTH 500 WEST, MURRAY UT. 84123 - (801) 270-2400

DESIGN ERS 10-03 | CHECK DJP 10-03 | QA AUDIT
DRAWN ERS 10-03 | CHECK DJP 10-03 | DATE
QUANT. ERS 10-03 | CHECK DJP 10-03 | BY

APPROVAL RECOMM. DATE — DESIGN ENGINEER
APPROVED DATE — PROJECT MANAGER

COTTONWOOD STREET
5600 SOUTH TO VINE STREET
SURCHARGE RAGWALL PROFILE

PROJECT NUMBER *HPP-STP-2148(1)0

SALT LAKE COUNTY

SHEET NO. GR-08

$DATE$ $TIME$

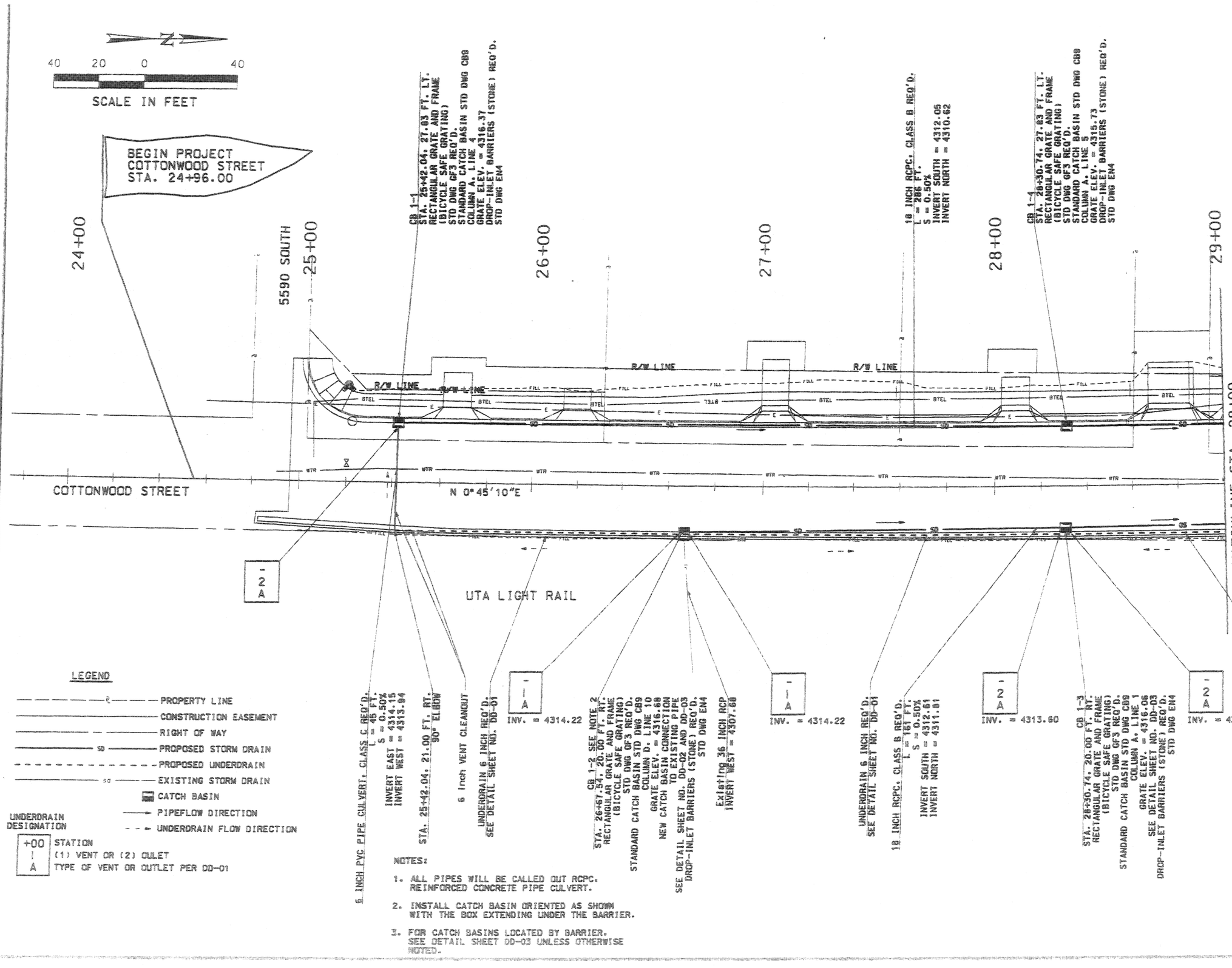

LEGEND

- PROPERTY LINE
- CONSTRUCTION EASEMENT
- RIGHT OF WAY
- PROPOSED STORM DRAIN
- PROPOSED UNDERDRAIN
- EXISTING STORM DRAIN
- CATCH BASIN
- PIPEFLOW DIRECTION
- UNDERDRAIN FLOW DIRECTION

UNDERDRAIN DESIGNATION

+00 | A — STATION; (1) VENT OR (2) OULET; TYPE OF VENT OR OUTLET PER DD-01

NOTES:

1. ALL PIPES WILL BE CALLED OUT RCPC. REINFORCED CONCRETE PIPE CULVERT.
2. INSTALL CATCH BASIN ORIENTED AS SHOWN WITH THE BOX EXTENDING UNDER THE BARRIER.
3. FOR CATCH BASINS LOCATED BY BARRIER, SEE DETAIL SHEET DD-03 UNLESS OTHERWISE NOTED.

RELEASE FOR CONSTRUCTION

NO.	DATE	DESCRIPTION

MURRAY CITY CORPORATION
DEPARTMENT OF PUBLIC SERVICES -- ENGINEERING DIVISION
4646 SOUTH 500 WEST, MURRAY UT. 84123 - (801) 270-2400

DESIGN MS 10/03 | CHECK JD 10/03 | QA AUDIT
DRAWN BN 10/03 | CHECK MS 10/03 | DATE
QUANT. MS 10/03 | CHECK BS 10/03 | BY

APPROVAL RECOMMENDED — DATE — DESIGN ENGINEER
APPROVED — DATE — PROJECT MANAGER

COTTONWOOD STREET
5600 SOUTH TO VINE STREET
DRAINAGE PLAN

PROJECT NUMBER *HPP-STP-2148(110

SALT LAKE COUNTY

SHEET NO. DR-1

$DATE$ $TIME$ $FILE$

SHEET NO. DR-2	COTTONWOOD STREET	MURRAY CITY CORPORATION	RELEASE FOR CONSTRUCTION
SALT LAKE COUNTY	5600 SOUTH TO VINE STREET	DEPARTMENT OF PUBLIC SERVICES -- ENGINEERING DIVISION	NO. / DATE / DESCRIPTION
	DRAINAGE PLAN	4646 SOUTH 500 WEST, MURRAY UT, 84123 - (801) 270-2400	
PROJECT NUMBER	*HPP-STP-2148(1)0	APPROVAL RECOMM. DATE DESIGN ENGINEER; APPROVED DATE PROJECT MANAGER	DESIGN MS 10/03 CHECK JD 10/03 QA AUDIT; DRAWN BN 10/03 CHECK MS 10/03 DATE; QUANT MS 10/03 CHECK BS 10/03 BY

$FILE$ $DATE$ $TIME$

NOTES:

1. ALL PIPES WILL BE CALLED OUT RCPC. REINFORCED CONCRETE PIPE CULVERT.
2. CATCH BASIN MAY BE CAST IN PLACE OR PRECAST. RUBBER BOOT REQ'D ON PRECAST CATCH BASINS. CONTRACTOR SHALL SUBMIT PROPOSED ALTERNATIVE TO ENGINEER FOR APPROVAL.
3. WTJ = WATER TIGHT JOINT.
4. FOR CATCH BASINS LOCATED BY BARRIER, SEE DETAIL SHEET DD-03 UNLESS OTHERWISE NOTED.

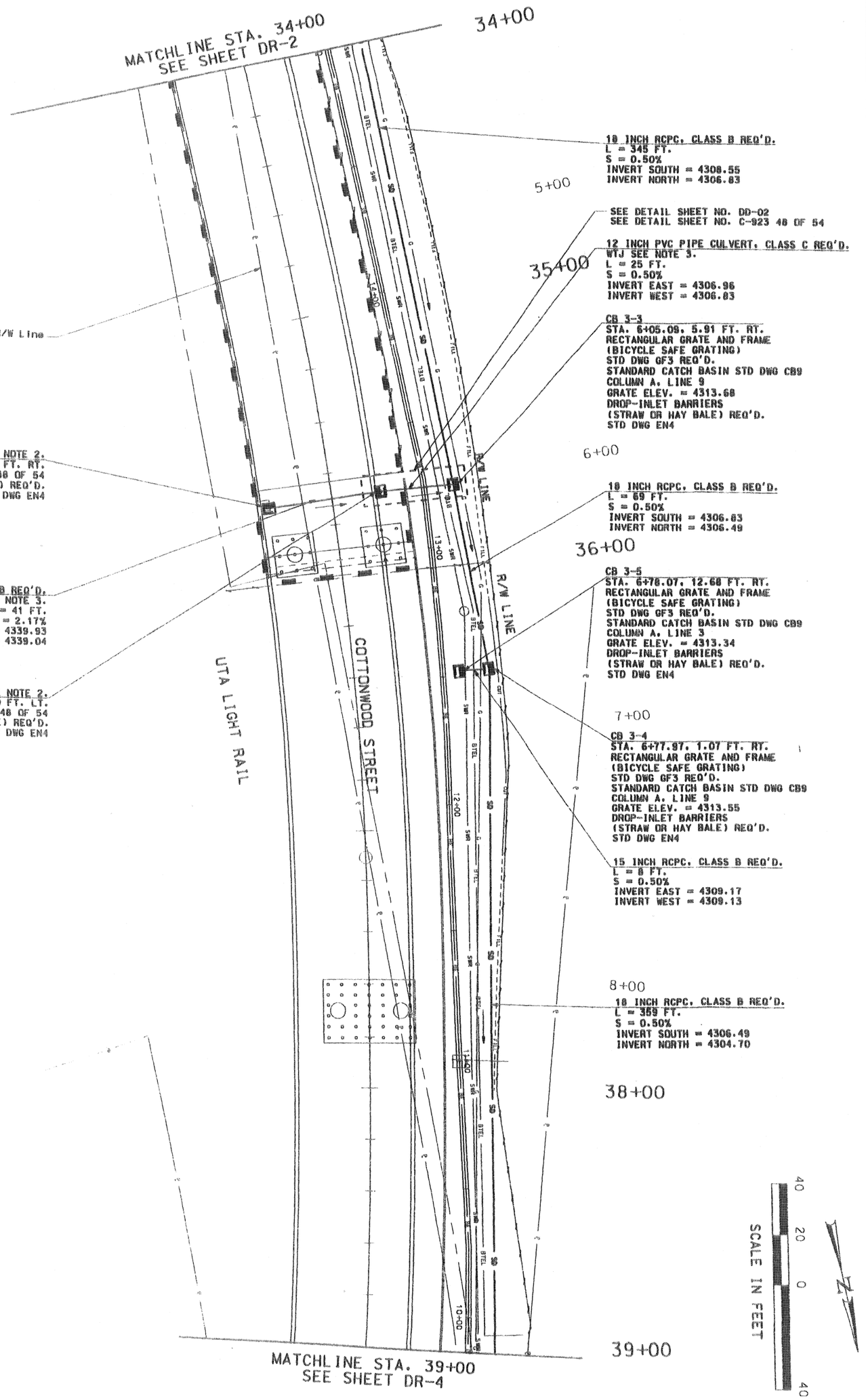

SALT LAKE COUNTY

COTTONWOOD STREET
5600 SOUTH TO VINE STREET
DRAINAGE PLAN

PROJECT NUMBER *HPP-STP-2148(1)0

MURRAY CITY CORPORATION
DEPARTMENT OF PUBLIC SERVICES -- ENGINEERING DIVISION
4646 SOUTH 500 WEST, MURRAY UT, 84123 - (801) 270-2400

APPROVAL RECOMM. DATE DESIGN ENGINEER
APPROVED DATE PROJECT MANAGER

DESIGN	MS 10/03	CHECK	JD 10/03	QA AUDIT
DRAWN	BN 10/03	CHECK	MS 10/03	DATE
QUANT.	MS 10/03	CHECK	BS 10/03	BY

RELEASE FOR CONSTRUCTION

NO.	DATE	DESCRIPTION

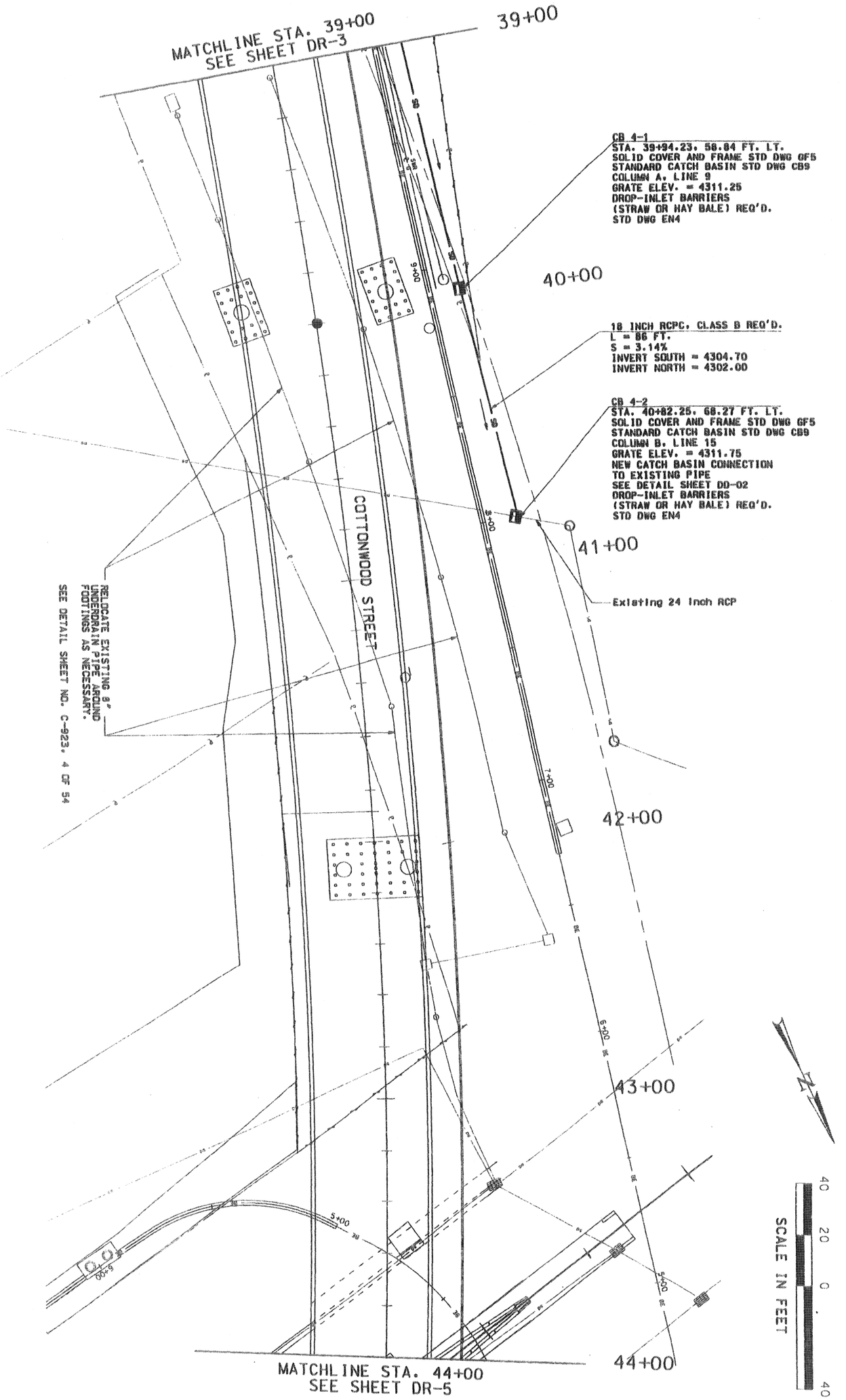

NOTES:

1. ALL PIPES WILL BE CALLED OUT RCPC, REINFORCED CONCRETE PIPE CULVERT.
2. FOR CATCH BASINS LOCATED BY BARRIER, SEE DETAIL SHEET DD-03 UNLESS OTHERWISE NOTED.

LEGEND

- PROPERTY LINE
- CONSTRUCTION EASEMENT
- RIGHT OF WAY
- PROPOSED STORM DRAIN
- EXISTING STORM DRAIN
- CATCH BASIN
- PIPEFLOW DIRECTION

SALT LAKE COUNTY

COTTONWOOD STREET
5600 SOUTH TO VINE STREET
DRAINAGE PLAN
PROJECT NUMBER *HPP-STP-2148(1)0

MURRAY CITY CORPORATION
DEPARTMENT OF PUBLIC SERVICES -- ENGINEERING DIVISION
4646 SOUTH 500 WEST, MURRAY UT, 84123 - (801) 270-2400

APPROVAL RECOMM. DATE DESIGN ENGINEER	DESIGN MS 10/03	CHECK JD 10/03	QA AUDIT		
	DRAWN BN 10/03	CHECK MS 10/03	DATE		
APPROVED DATE PROJECT MANAGER	QUANT. MS 10/03	CHECK BS 10/03	BY		

RELEASE FOR CONSTRUCTION

NO.	DATE	DESCRIPTION

$FILES $DATES $TIMES

NOTES:

1. ALL PIPES WILL BE CALLED OUT RCPC. REINFORCED CONCRETE PIPE CULVERT.
2. CONTRACTOR SHALL CONFIRM LIMITS OF UNDER ROADWAY REPOSITORY AND FIELD VERIFY REPOSITORY CATCH BASIN DEPRESSIONS CONSTRUCTED BY THE REPOSITORY CONTRACTOR PRIOR TO ANY CATCH BASIN RELATED EXCAVATION.
3. CONTRACTOR SHALL BE RESPONSIBLE FOR THE COST TO REPAIR DAMAGE TO THE REPOSITORY, SLAG LAYER, GEOTEXTILE, GEOMEMBRANE OR VISUAL MARKER CAUSED BY CONSTRUCTION OF THE CATCH BASINS OR STORM DRAIN PIPE SYSTEM.
4. CONTRACTOR SHALL IMMEDIATELY NOTIFY THE ENGINEER OF ANY DAMAGE DONE TO THE REPOSITORY.
5. CATCH BASIN MAY BE CAST IN PLACE OR PRECAST. RUBBER BOOT REQ'D ON PRECAST CATCH BASINS. CONTRACTOR SHALL SUBMIT PROPOSED ALTERATIONS TO ENGINEER FOR APPROVAL.
6. WTJ = WATER TIGHT JOINT.
7. FOR CATCH BASINS LOCATED BY BARRIER, SEE DETAIL SHEET DD-03 UNLESS OTHERWISE NOTED.
8. INSTALL STORM DRAIN PIPES AFTER SURCHARGING IS COMPLETE.

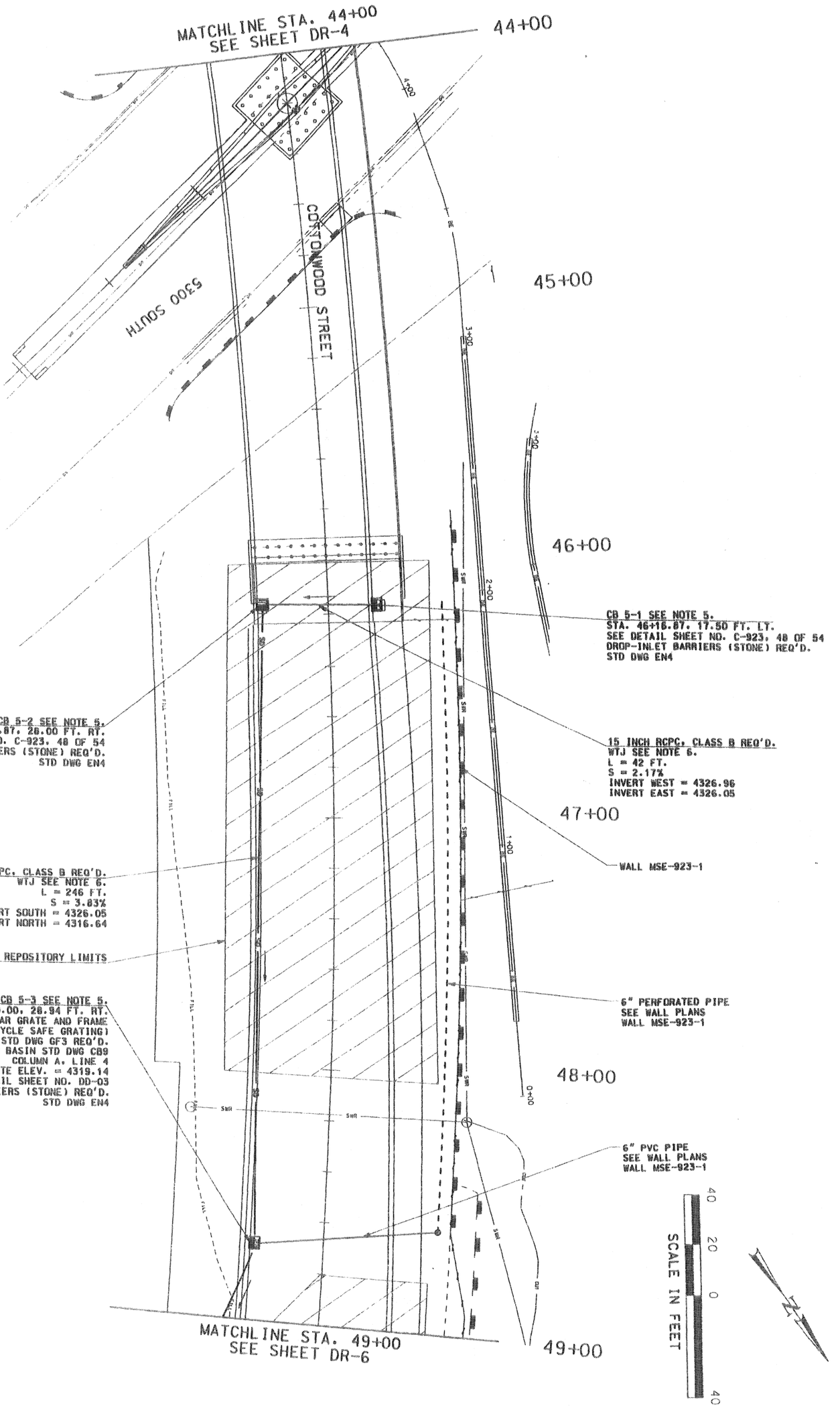

LEGEND

- PROPERTY LINE
- CONSTRUCTION EASEMENT
- RIGHT OF WAY
- SD PROPOSED STORM DRAIN
- SD EXISTING STORM DRAIN
- CATCH BASIN
- PIPEFLOW DIRECTION
- REPOSITORY LIMITS

SHEET NO. 08-2

SALT LAKE COUNTY

COTTONWOOD STREET
5600 SOUTH TO VINE STREET
DRAINAGE PLAN
PROJECT NUMBER *HPP-STP-2148(1)0

MURRAY CITY CORPORATION
DEPARTMENT OF PUBLIC SERVICES -- ENGINEERING DIVISION
4646 SOUTH 500 WEST, MURRAY UT, 84123 - (801) 270-2400

APPROVAL RECOMM. DATE DESIGN ENGINEER
APPROVED DATE PROJECT MANAGER

DESIGN	MS	10/03	CHECK	JD	10/03
DRAWN	BN	10/03	CHECK	MS	10/03
QUANT.	MS	10/03	CHECK	BS	10/03

QA AUDIT DATE BY

RELEASE FOR CONSTRUCTION

NO.	DATE	DESCRIPTION

NOTES:

1. ALL PIPES WILL BE CALLED OUT RCPC. REINFORCED CONCRETE PIPE CULVERT.
2. CONTRACTOR SHALL CONFIRM LIMITS OF UNDER ROADWAY REPOSITORY AND FIELD VERIFY REPOSITORY CATCH BASIN DEPRESSIONS CONSTRUCTED BY THE REPOSITORY CONTRACTOR PRIOR TO ANY CATCH BASIN RELATED EXCAVATION.
3. CONTRACTOR SHALL BE RESPONSIBLE FOR THE COST TO REPAIR DAMAGE TO THE REPOSITORY. SLAG LAYER, GEOTEXTILE, GEOMEMBRANE OR VISUAL MARKER CAUSED BY CONSTRUCTION OF THE CATCH BASINS OR STORM DRAIN PIPE SYSTEM.
4. CONTRACTOR SHALL IMMEDIATELY NOTIFY THE ENGINEER OF ANY DAMAGE DONE TO THE REPOSITORY.
5. CATCH BASIN MAY BE CAST IN PLACE OR PRECAST. RUBBER BOOT REQ'D ON PRECAST CATCH BASINS. CONTRACTOR SHALL SUBMIT PROPOSED ALTERATIONS TO ENGINEER FOR APPROVAL.
6. WTJ = WATER TIGHT JOINT.
7. FOR CATCH BASINS LOCATED BY BARRIER, SEE DETAIL SHEET DD-03 UNLESS OTHERWISE NOTED.

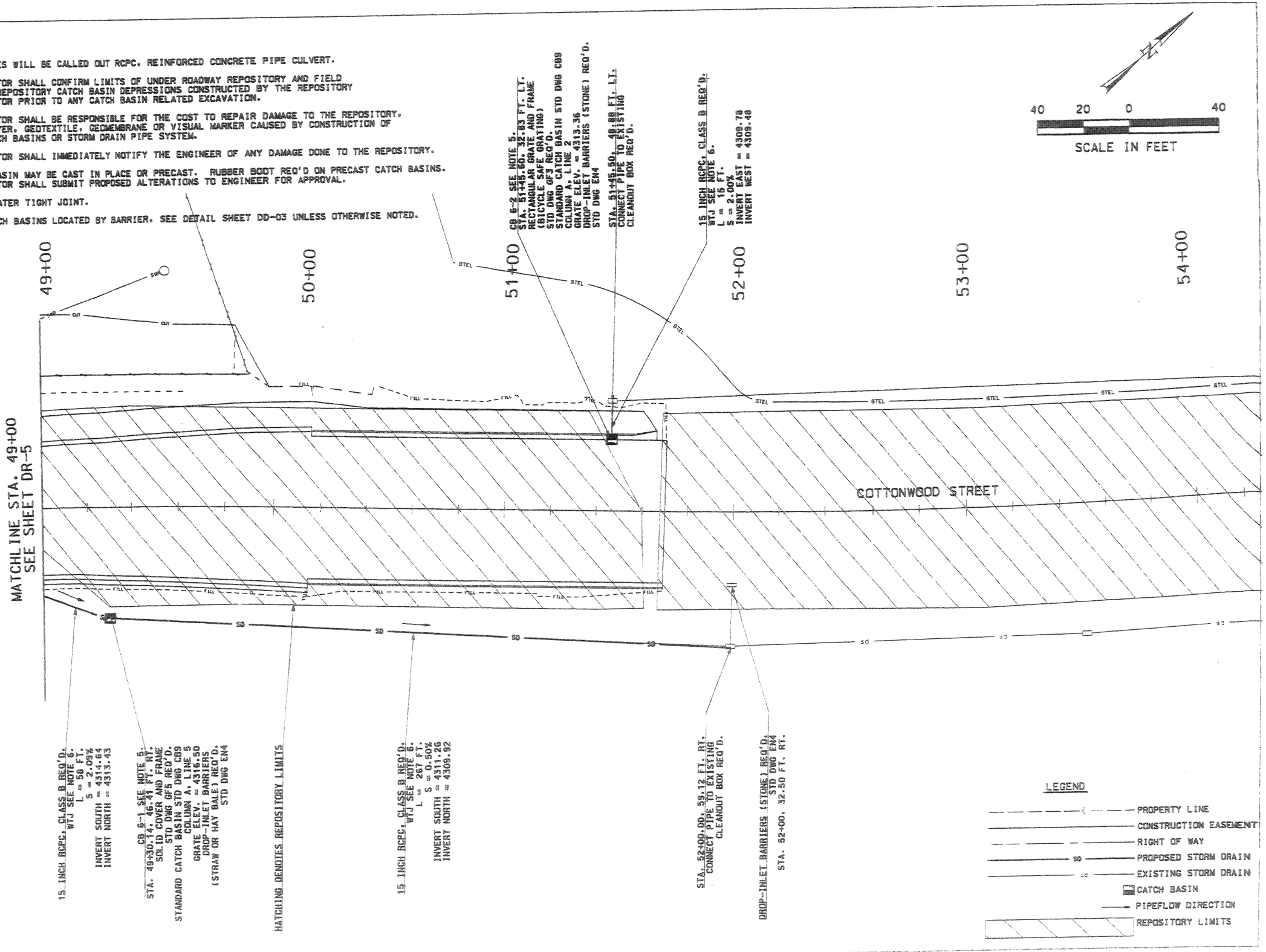

RELEASE FOR CONSTRUCTION

NO.	DATE	DESCRIPTION

MURRAY CITY CORPORATION
DEPARTMENT OF PUBLIC SERVICES -- ENGINEERING DIVISION
4646 SOUTH 500 WEST, MURRAY UT. 84123 - (801) 270-2400

DESIGN	MS	10/03	CHECK	JD	10/03	QA AUDIT
DRAWN	BN	10/03	CHECK	MS	10/03	DATE
QUANT.	MS	10/03	CHECK	BS	10/03	BY

APPROVAL RECOMM. — DESIGN ENGINEER — DATE
APPROVED — PROJECT MANAGER — DATE

COTTONWOOD STREET
5600 SOUTH TO VINE STREET
DRAINAGE PLAN

PROJECT NUMBER #HPP-STP-2148(1)0

SALT LAKE COUNTY

SHEET NO. DR-4

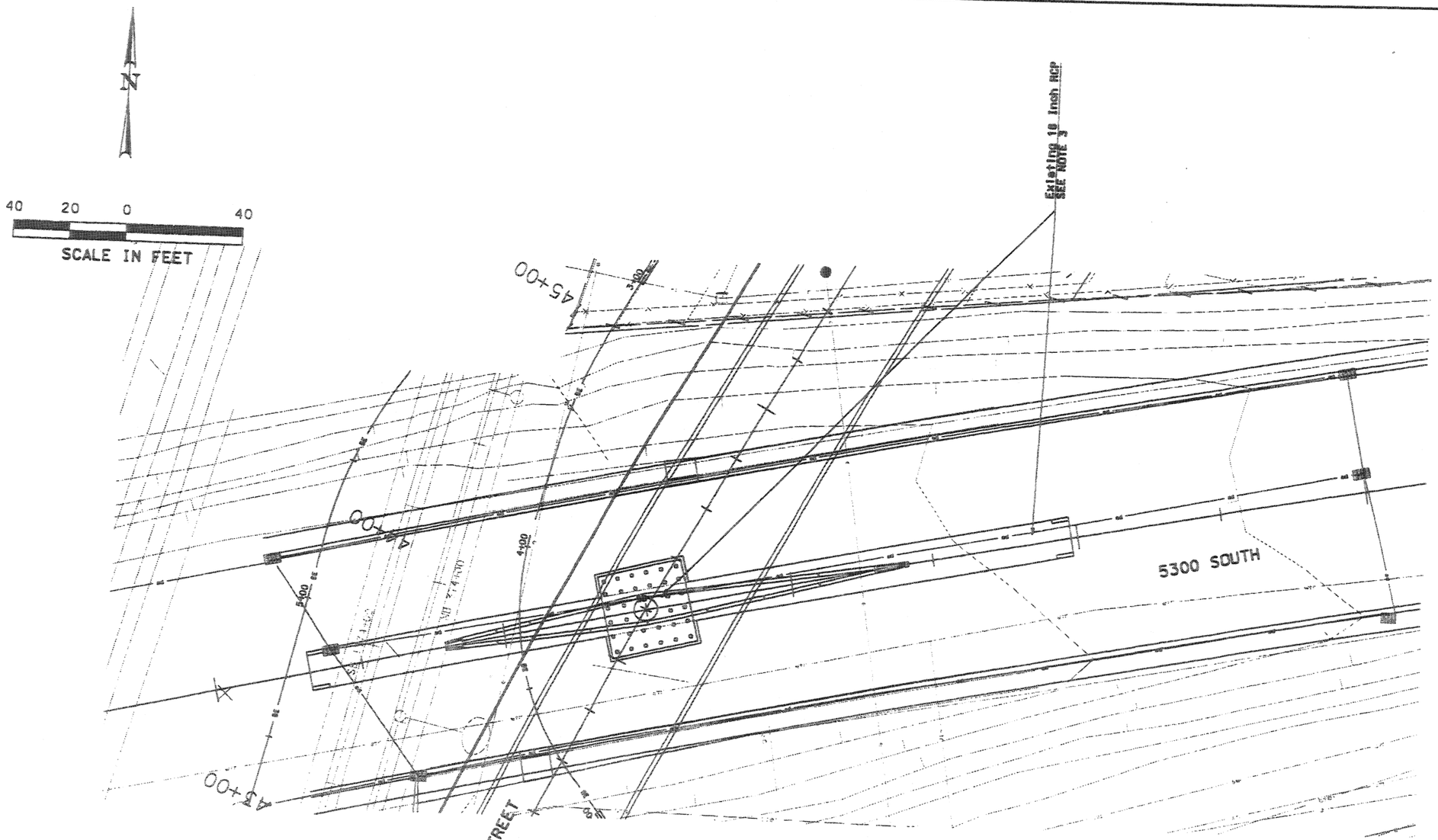

NOTES:

1. ALL PIPES WILL BE CALLED OUT RCPC. REINFORCED CONCRETE PIPE CULVERT.
2. FOR CATCH BASINS LOCATED BY BARRIER, SEE DETAIL SHEET DD-03 UNLESS OTHERWISE NOTED.
3. CONTRACTOR WILL MAINTAIN PIPE FLOW DURING CONSTRUCTION.

LEGEND

- PROPERTY LINE
- CONSTRUCTION EASEMENT
- RIGHT OF WAY
- sd — PROPOSED STORM DRAIN
- sd — EXISTING STORM DRAIN
- CATCH BASIN
- PIPEFLOW DIRECTION

RELEASE FOR CONSTRUCTION

NO.	DATE	DESCRIPTION

MURRAY CITY CORPORATION
DEPARTMENT OF PUBLIC SERVICES -- ENGINEERING DIVISION
4646 SOUTH 500 WEST, MURRAY UT. 84123 - (801) 270-2400

DESIGN MS 10/03 | CHECK JD 10/03 | QA AUDIT
DRAWN BM 10/03 | CHECK MS 10/03 | DATE
QUANT. MS 10/03 | CHECK BS 10/03 | BY

APPROVAL RECOMMENDED — DESIGN ENGINEER — DATE
APPROVED — PROJECT MANAGER — DATE

COTTONWOOD STREET
5600 SOUTH TO VINE STREET
DRAINAGE PLAN

PROJECT NUMBER *HPP-STP-2148(1)0

SALT LAKE COUNTY

SHEET NO. DR-7

@DATE@ @TIME@ @FILE@

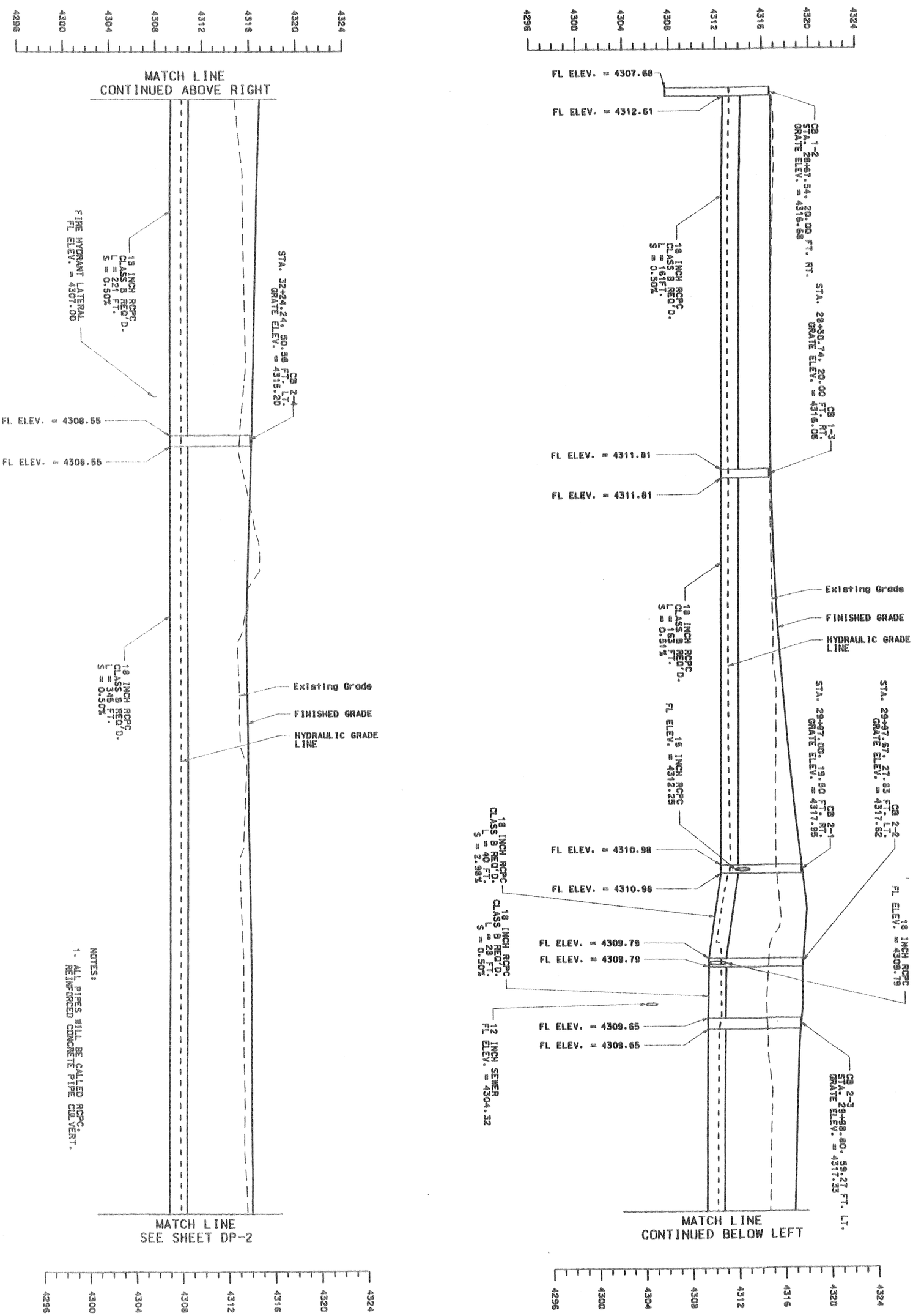

SHEET NO. DP-1	COTTONWOOD STREET	MURRAY CITY CORPORATION	RELEASE FOR CONSTRUCTION	
SALT LAKE COUNTY	5600 SOUTH TO VINE STREET	DEPARTMENT OF PUBLIC SERVICES -- ENGINEERING DIVISION	NO.	DATE / DESCRIPTION
	DRAINAGE PROFILE	4646 SOUTH 500 WEST, MURRAY UT, 84123 - (801) 270-2400		
	PROJECT NUMBER *HPP-STP-2148(1)0	APPROVAL RECOMM. DATE DESIGN ENGINEER; APPROVED DATE PROJECT MANAGER	DESIGN MS 10/03; DRAWN BN 10/03; QUANT. MS 10/03; CHECK JD 10/03; CHECK MS 10/03; CHECK BS 10/03	QA AUDIT DATE BY

$FILE$ $DATE$ $TIME$

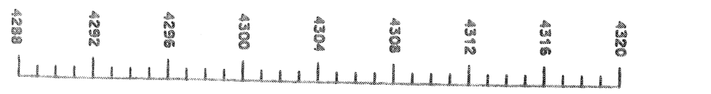

MATCH LINE
CONTINUED ABOVE RIGHT

FL ELEV. = 4304.07

FL ELEV. = 4304.07

18 INCH RCPC
CLASS B REQ'D.
S = 3.14%
L = 99 FT.

CB 4-1
STA. 39+94.23, 58.84 FT. LT.
GRATE ELEV. = 4311.25

Existing Grade

HYDRAULIC GRADE LINE

FL ELEV. = 4302.00

FL ELEV. = 4301.50

CB 4-2
STA. 40+42.25, 68.27 FT. LT.
GRATE ELEV. = 4311.75

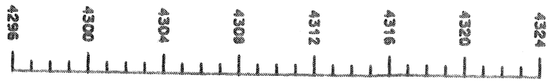

MATCH LINE
SEE SHEET DP-1

FL ELEV. = 4306.83

FL ELEV. = 4306.83

18 INCH RCPC
CLASS B REQ'D.
S = 0.50%
L = 68 FT.

CB 3-3
STA. 35+70.41, 49.75 FT. LT.
GRATE ELEV. = 4313.68

FL ELEV. = 4306.49

FL ELEV. = 4306.49

15 INCH RCPC
FL ELEV. = 4309.13

CB 3-4
STA. 36+40.04, 54.69 FT. LT.
GRATE ELEV. = 4313.55

18 INCH RCPC
CLASS B REQ'D.
S = 0.50%
L = 359 FT.

Existing Grade

FINISHED GRADE

HYDRAULIC GRADE LINE

MATCH LINE
CONTINUED BELOW LEFT

NOTES:

1. ALL PIPES WILL BE CALLED RCPC- REINFORCED CONCRETE PIPE CULVERT.

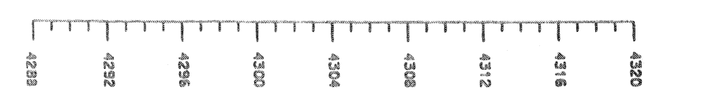

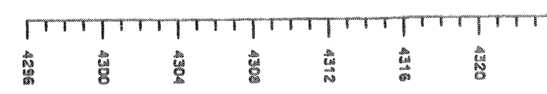

SHEET NO. DP-2

SALT LAKE COUNTY

COTTONWOOD STREET

5600 SOUTH TO VINE STREET

DRAINAGE PROFILE

PROJECT NUMBER *HPP-STP-2148(1)0

MURRAY CITY CORPORATION
DEPARTMENT OF PUBLIC SERVICES -- ENGINEERING DIVISION
4646 SOUTH 500 WEST, MURRAY UT, 84123 - (801) 270-2400

APPROVAL RECOMM. DATE DESIGN ENGINEER

APPROVED DATE PROJECT MANAGER

DESIGN	MS	10/03	CHECK	JD	10/03
DRAWN	BN	10/03	CHECK	MS	10/03
QUANT.	MS	10/03	CHECK	BS	10/03

QA AUDIT DATE BY

RELEASE FOR CONSTRUCTION

NO.	DATE	DESCRIPTION

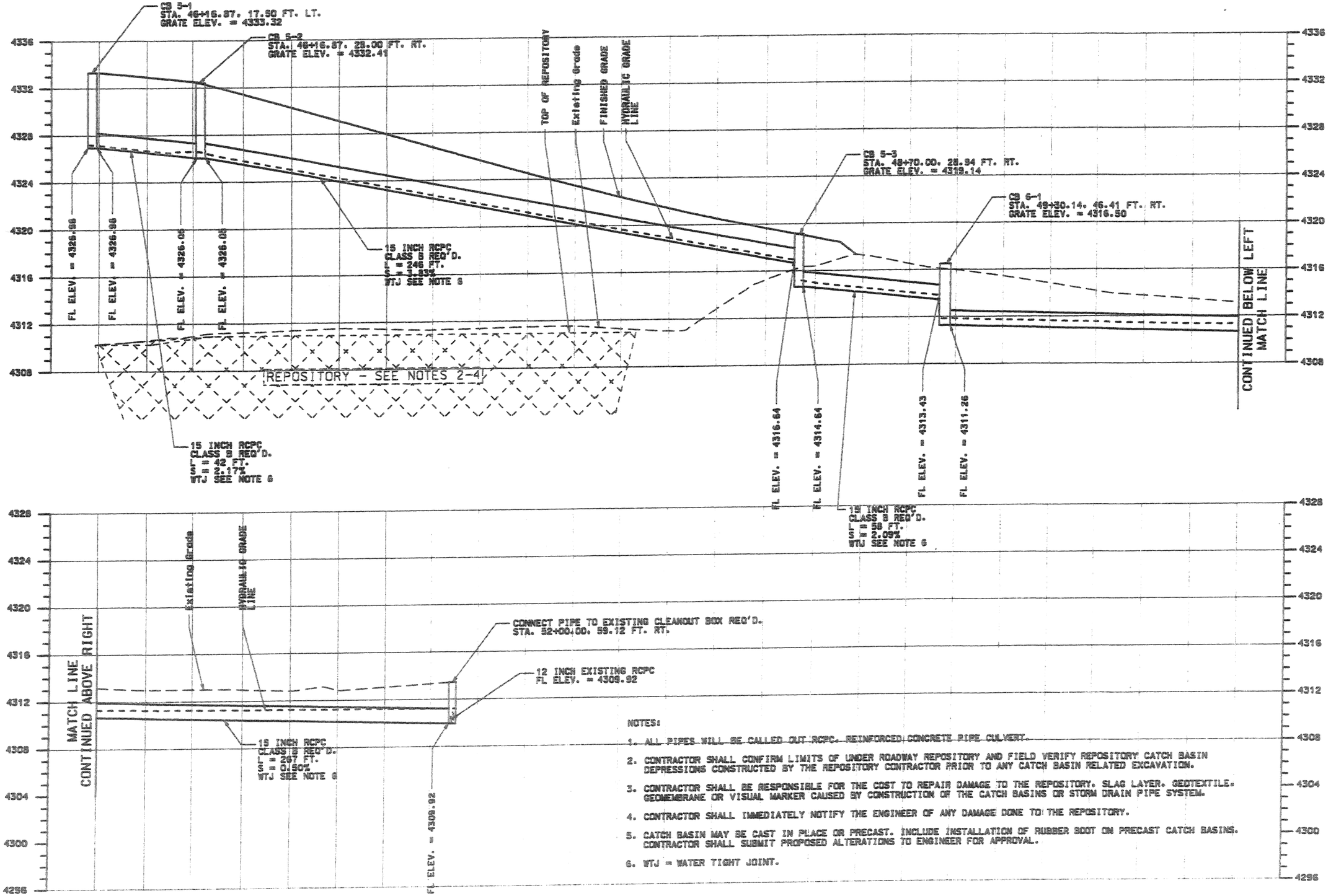

NOTES:

1. ALL PIPES WILL BE CALLED OUT RCPC. REINFORCED CONCRETE PIPE CULVERT.
2. CONTRACTOR SHALL CONFIRM LIMITS OF UNDER ROADWAY REPOSITORY AND FIELD VERIFY REPOSITORY CATCH BASIN DEPRESSIONS CONSTRUCTED BY THE REPOSITORY CONTRACTOR PRIOR TO ANY CATCH BASIN RELATED EXCAVATION.
3. CONTRACTOR SHALL BE RESPONSIBLE FOR THE COST TO REPAIR DAMAGE TO THE REPOSITORY. SLAG LAYER. GEOTEXTILE. GEOMEMBRANE OR VISUAL MARKER CAUSED BY CONSTRUCTION OF THE CATCH BASINS OR STORM DRAIN PIPE SYSTEM.
4. CONTRACTOR SHALL IMMEDIATELY NOTIFY THE ENGINEER OF ANY DAMAGE DONE TO THE REPOSITORY.
5. CATCH BASIN MAY BE CAST IN PLACE OR PRECAST. INCLUDE INSTALLATION OF RUBBER BOOT ON PRECAST CATCH BASINS. CONTRACTOR SHALL SUBMIT PROPOSED ALTERATIONS TO ENGINEER FOR APPROVAL.
6. WTJ = WATER TIGHT JOINT.

RELEASE FOR CONSTRUCTION

NO.	DATE	DESCRIPTION

MURRAY CITY CORPORATION
DEPARTMENT OF PUBLIC SERVICES — ENGINEERING DIVISION
4646 SOUTH 500 WEST, MURRAY UT, 84123 - (801) 270-2400

DESIGN	MS	10/03	CHECK	JD	10/03	QA AUDIT
DRAWN	BN	10/03	CHECK	MS	10/03	DATE
QUANT.	MS	10/03	CHECK	BS	10/03	BY

APPROVAL RECOMMENDED — DESIGN ENGINEER — DATE
APPROVED — PROJECT MANAGER — DATE

COTTONWOOD STREET
5600 SOUTH TO VINE STREET
DRAINAGE PROFILE

PROJECT NUMBER *HPP-STP-2148(1)0

SALT LAKE COUNTY

SHEET NO. DP-3

UNDERDRAIN DETAIL

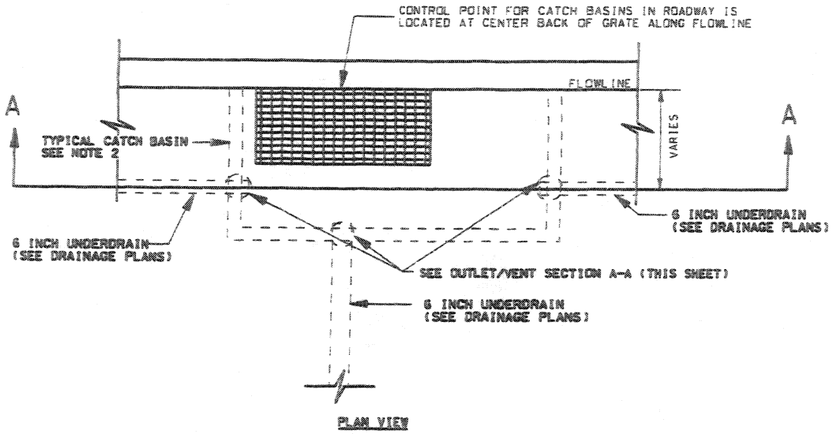

PLAN VIEW

TYPE A OUTLET/VENT DETAIL
NTS

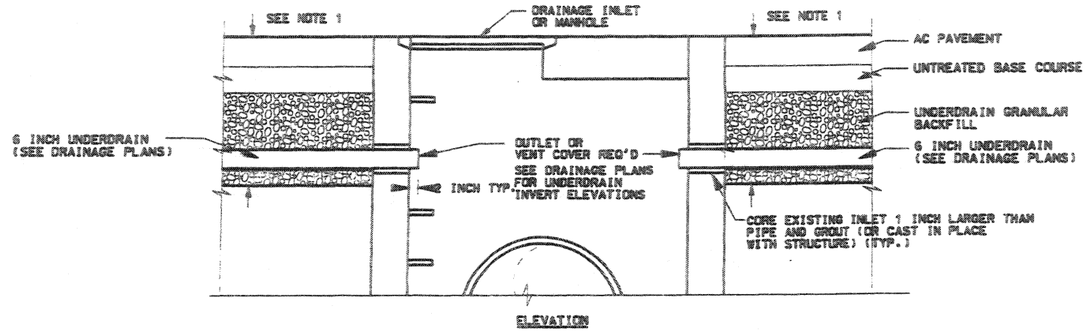

ELEVATION

UNDERDRAIN INLET CONNECTION DETAIL SECTION A-A
NTS

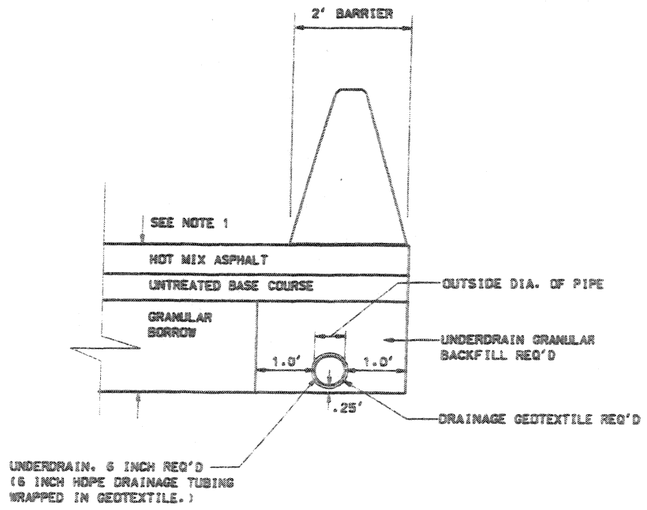

TRENCH DETAIL (FOR 6 INCH UNDERDRAIN)

NOTES:

1. SEE ROADWAY TYPICAL SECTIONS FOR PAVEMENT SECTION INFORMATION.
2. CATCH BASIN SIZE VARIES. REFER TO DRAINAGE PLANS FOR SPECIFIC STORM DRAIN INFORMATION.

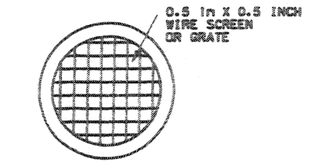

6 INCH HDPE (FOR UNDERDRAIN) OUTLET COVER

(2) OUTLET COVER
NTS

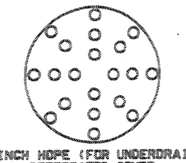

6 INCH HDPE (FOR UNDERDRAIN) PERFORATED COVER

(1) VENT COVER
NTS

RELEASE FOR CONSTRUCTION

NO.	DATE	DESCRIPTION

MURRAY CITY CORPORATION
DEPARTMENT OF PUBLIC SERVICES -- ENGINEERING DIVISION
4646 SOUTH 500 WEST, MURRAY UT. 84123 - (801) 270-2400

DESIGN BS 10/03 | CHECK JD 10/03 | QA AUDIT
DRAWN BN 10/03 | CHECK BS 10/03 | DATE
QUANT. BS 10/03 | CHECK MS 10/03 | BY

APPROVAL RECOMM. — DESIGN ENGINEER — DATE
APPROVED — PROJECT MANAGER — DATE

COTTONWOOD STREET
5600 SOUTH TO VINE STREET
UNDERDRAIN DETAIL

PROJECT NUMBER *HPP-STP-2148(110)

SALT LAKE COUNTY

SHEET NO. DD-01

$DATE$ $TIME$
STYLES

CONNECTION TO EXISTING PIPE AND DOWN DRAIN DETAIL

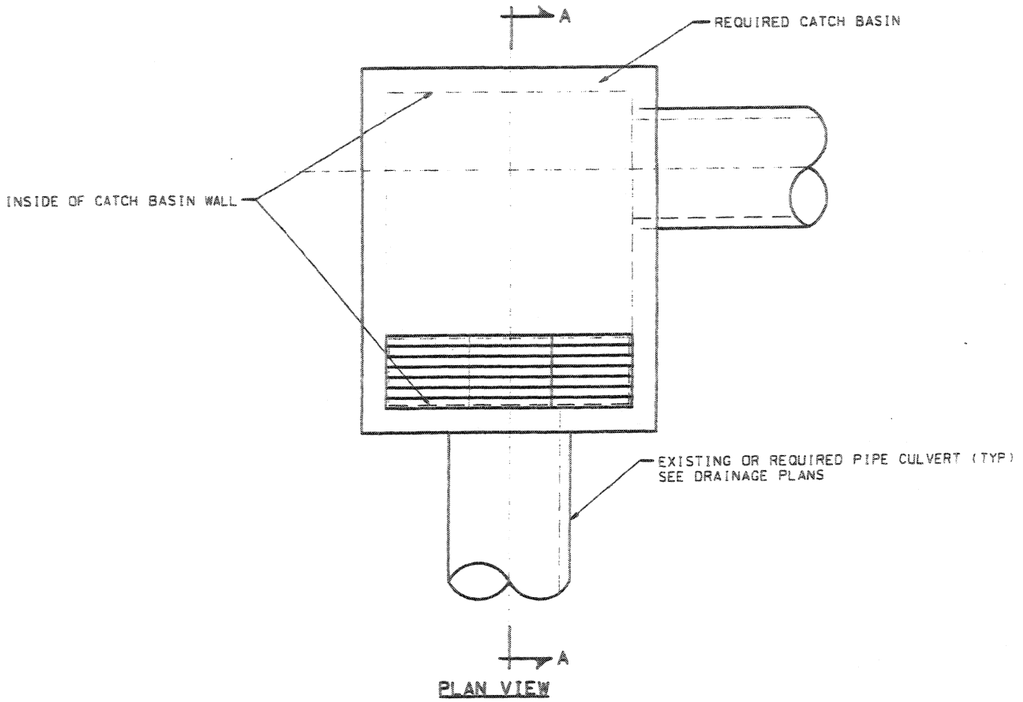

PLAN VIEW
NTS

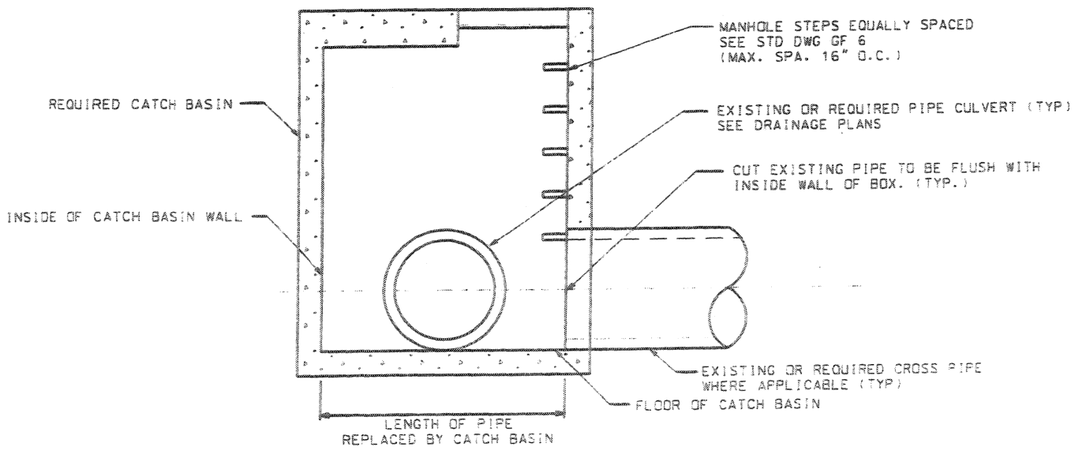

SECTION A-A

NEW CATCH BASIN CONNECTION TO EXISTING PIPE
NTS

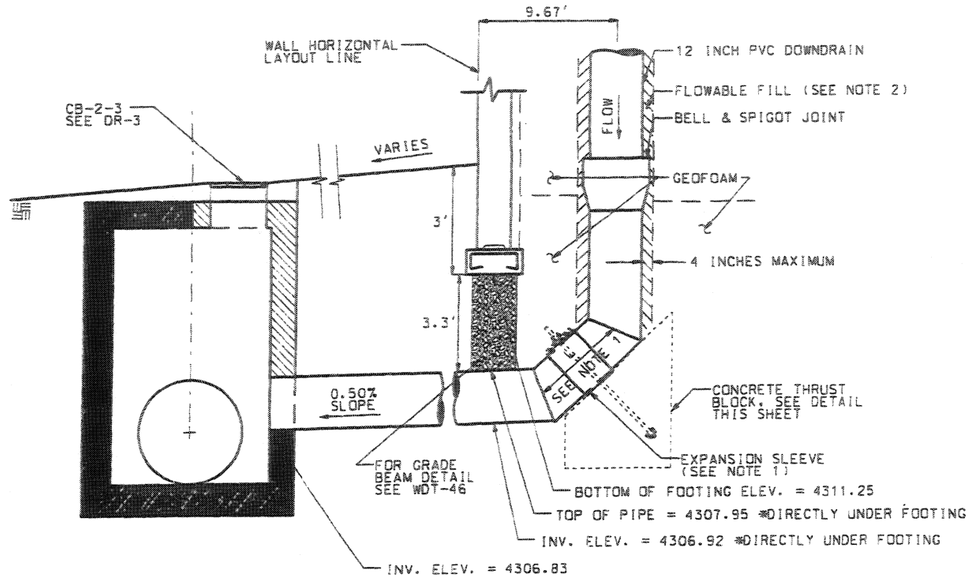

NOTES:

1. AN EXPANSION SLEEVE (PVC PIPE UNION) SHALL BE PROVIDED WHEN LENGTH BETWEEN 45-DEGREE BEND JOINTS EXCEEDS 5 FT. WHEN BEND-TO-BEND LENGTH IS LESS THAN OR EQUAL TO 5 FT., PROVIDE BEND-TO-BEND CONNECTION WITH BELL AND SPIGOT JOINTS OMMITING SLEEVE
2. AREA BETWEEN DOWN DRAIN AND GEOFOAM WILL BE FILLED WITH TYPE B FLOWABLE FILL TO SECURE PIPE.

DOWNDRAIN DETAIL
NTS

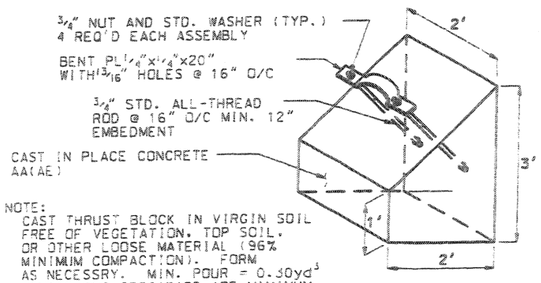

NOTE:
CAST THRUST BLOCK IN VIRGIN SOIL FREE OF VEGETATION, TOP SOIL, OR OTHER LOOSE MATERIAL (96% MINIMUM COMPACTION). FORM AS NECESSRY. MIN. POUR = 0.30yd^3
DIMENSIONS SPECIFIED ARE MINIMUM DIMENSIONS

CONCRETE THRUST BLOCK DETAIL
NTS

RELEASE FOR CONSTRUCTION

NO.	DATE	DESCRIPTION

MURRAY CITY CORPORATION
DEPARTMENT OF PUBLIC SERVICES -- ENGINEERING DIVISION
4646 SOUTH 500 WEST, MURRAY UT. 84123 - (801) 270-2400

DESIGN	MS	10/03	CHECK	JD	10/03
DRAWN	MS	10/03	CHECK	JD	10/03
QUANT.	MS	10/03	CHECK	BS	10/03

QA AUDIT DATE BY

APPROVAL RECOMM. _____ DATE _____ DESIGN ENGINEER _____
APPROVED _____ DATE _____ PROJECT MANAGER _____

COTTONWOOD STREET
5600 SOUTH TO VINE STREET
DRAINAGE DETAILS

PROJECT NUMBER #HPP-STP-2148(110

SALT LAKE COUNTY

SHEET NO. DD-02

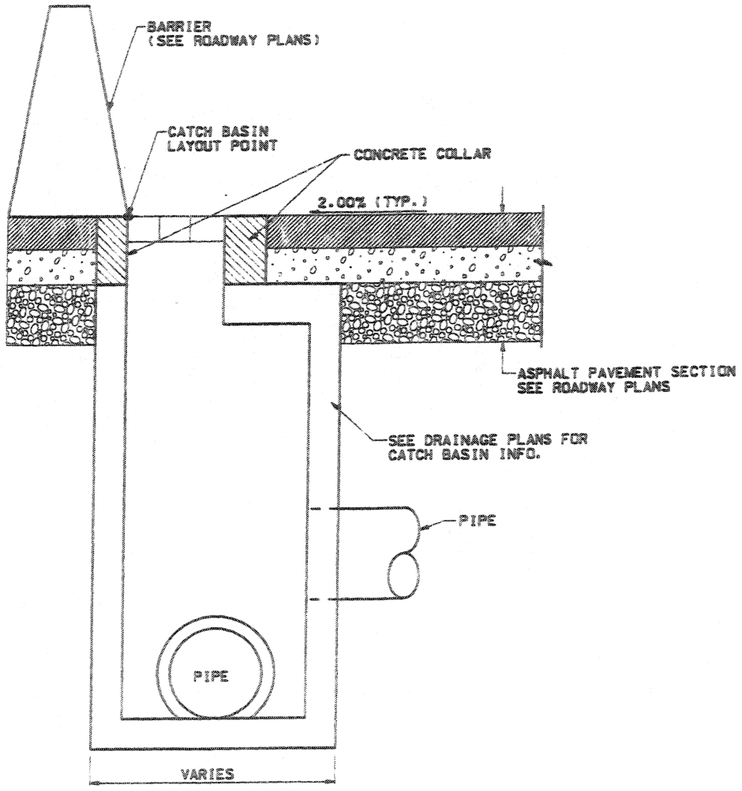

BARRIER DRAIN DETAIL - CROSS SECTION

NTS

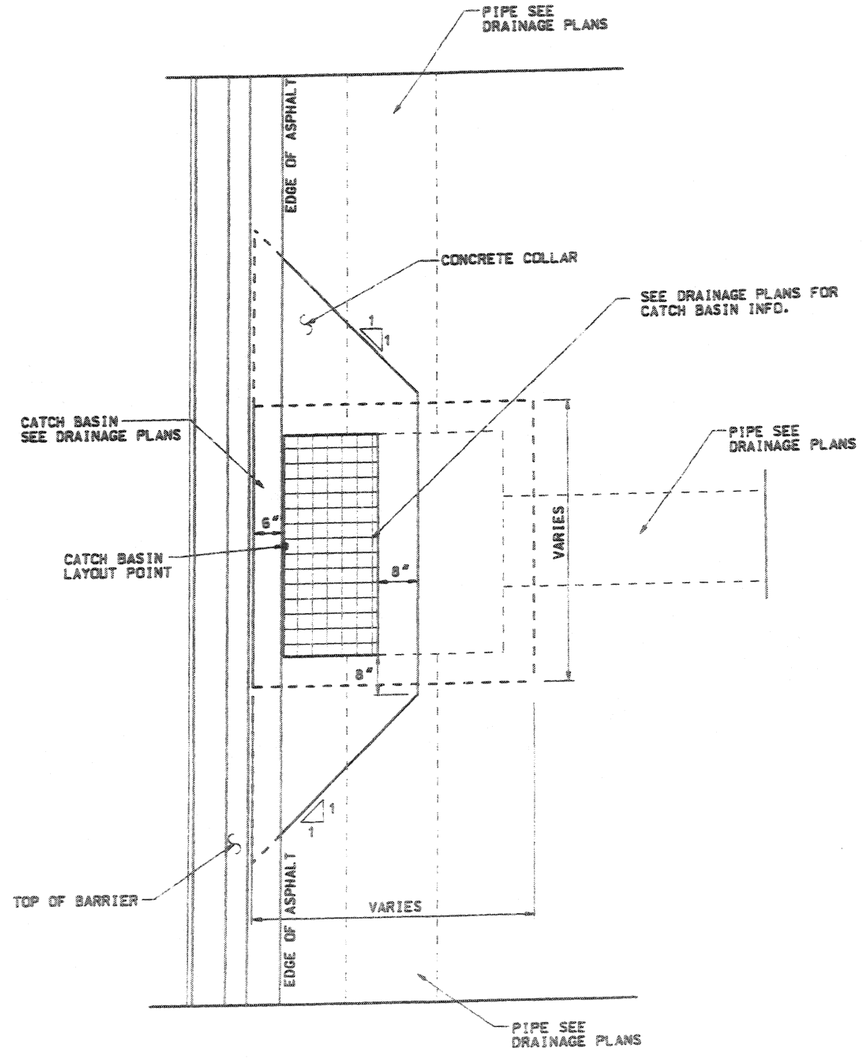

BARRIER DRAIN DETAIL - PLAN

NTS

RELEASE FOR CONSTRUCTION

NO.	DATE	DESCRIPTION

MURRAY CITY CORPORATION
DEPARTMENT OF PUBLIC SERVICES -- ENGINEERING DIVISION
4646 SOUTH 500 WEST, MURRAY UT. 84123 - (801) 270-2400

DESIGN MC	10/03	CHECK JD	10/03	QA AUDIT	
DRAWN MC	10/03	CHECK JD	10/03	DATE	
QUANT. MC	10/03	CHECK BS	10/03	BY	

APPROVAL RECOMMENDED — DATE — DESIGN ENGINEER
APPROVED — DATE — PROJECT MANAGER

COTTONWOOD STREET
5600 SOUTH TO VINE STREET
DRAINAGE DETAIL
PROJECT NUMBER *HPP-STP-2148(110

SALT LAKE COUNTY
SHEET NO. DD-03

$DATE$ $TIME$

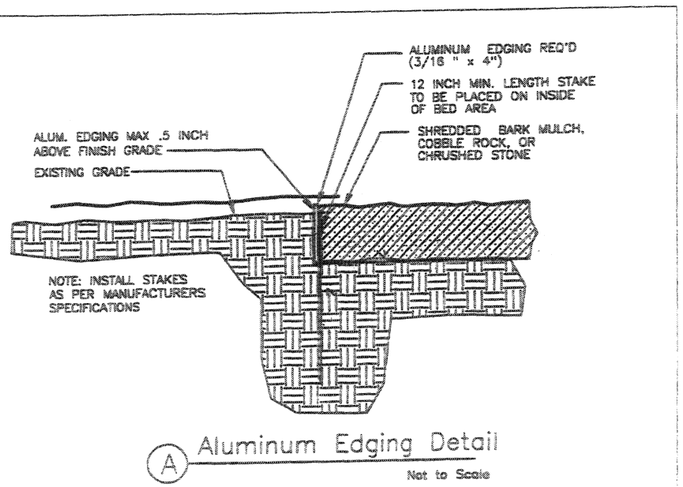

A Aluminum Edging Detail

Not to Scale

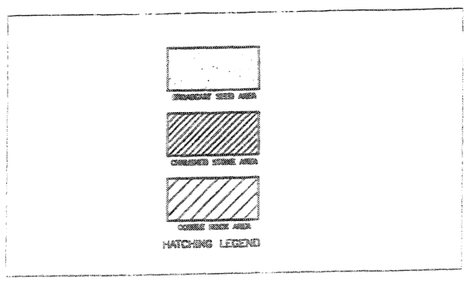

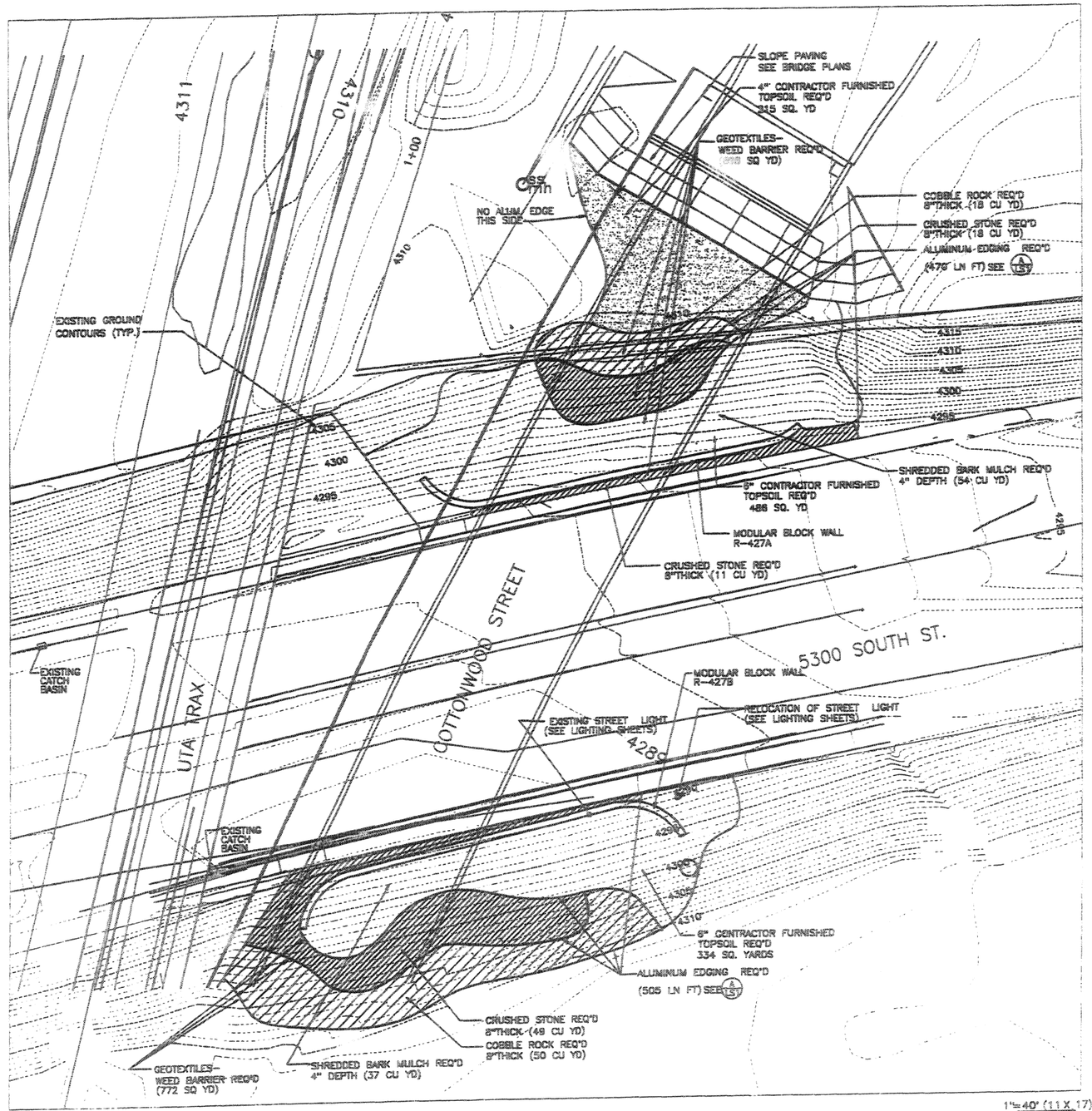

1"= 40' (11 X 17)

NORTH (8/14/03)

RELEASE FOR CONSTRUCTION

NO.	DATE	DESCRIPTION

MURRAY CITY CORPORATION
DEPARTMENT OF PUBLIC SERVICES -- ENGINEERING DIVISION
4646 SOUTH 500 WEST, MURRAY UT. 84123 -- (801) 270-2400

DESIGN	RH	10/30/03	CHECK YS	10/30/03
DRAWN	RH	10/30/03	CHECK YS	10/30/03
QUANT.	RH	10/30/03	CHECK YS	10/30/03

QA AUDIT DATE BY

ABANDONED RECORDED — DATE — DESIGN ASSISTANT

APPROVED — DATE — PROJECT MANAGER

COTTONWOOD STREET
5600 SOUTH TO VINE STREET
5300 SOUTH LANDCAPE PLAN

PROJECT NUMBER *HPP--STP--2148(1)0

Salt Lake County

SHEET NO. LS-1

PLANT LEGEND

	BOTANICAL NAME	COMMON NAME	SIZE	SPACING
TREES				
PV	PRUNUS VIRGINIANA 'CANADA RED'	CANADA RED CHOKECHERRY	2" CAL	AS SHOWN
SHRUBS				
MA	MAHONIA AQUIFOLIUM 'COMPACTA'	COMPACT OREGON GRAPE	5 GAL	3' O.C.
FA	FORSYTHIA 'ARNOLD DWARF'	DWARF FORSYTHIA	5 GAL	5' O.C.
PC	PRUNUS CISTENA	CISTENA PLUM	5 GAL	5' O.C.
GROUND COVER				
MR	MAHONIA REPENS	CREEPING OREGON GRAPE	1 GAL	16" O.C.

NOTES:
1. ALL SHRUB AREAS SHALL RECEIVE A MINIMUM OF 6" IMPORTED TOP SOIL. IMPORTED TOP SOIL SHALL BE RICH LOAM AND SHALL BE APPROVED BY LANDSCAPE ARCHITECT.
2. TOP DRESS ALL SHRUB/ TREE AREAS W/ 4" DEEP SHREDDED BARK MULCH. MULCH SHALL BE INSTALLED AFTER PRE-EMERGENT HAS BEEN APPLIED.
3. ALL TREES, AND SHRUBS SHALL BE PLANTED ACCORDING TO DETAILS.
4. CONFIRM COMPACTION/SETTLING OF FINISH GRADE PRIOR TO CONSTRUCTION.
5. VERIFY LOCATION OF ALL UTILITIES PRIOR TO CONSTRUCTION. CONTACT BLUE STAKES AND VERIFY W/ SITE PLAN.
6. ALL PLANT MATERIAL SHALL BE HEALTHY STOCK, FREE OF DISEASE AND DISFIGUREMENT, HAVING FULL NATURAL SHAPES.
7. PLANT MATERIAL SHALL BE THE SAME SPECIES AND SIZE AS DESCRIBED IN THE PLANT SCHEDULE.

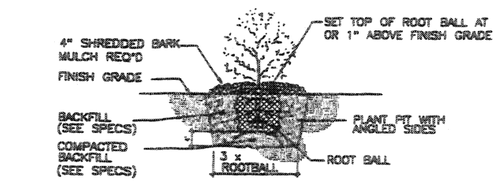

(A) Shrub Planting Detail

Not to Scale

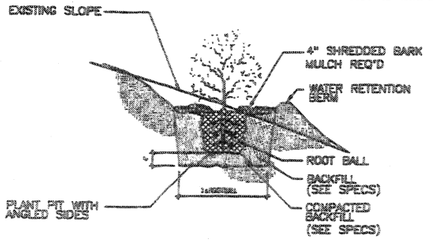

(B) Slope Planting Detail

Not to Scale

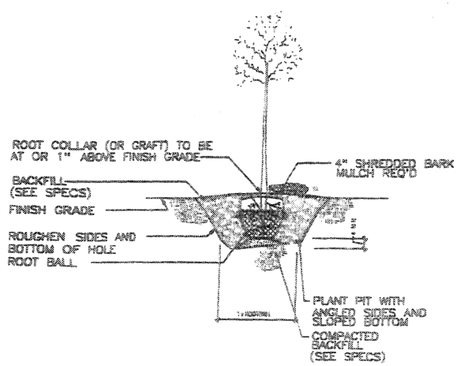

(C) Tree Planting

Not to Scale

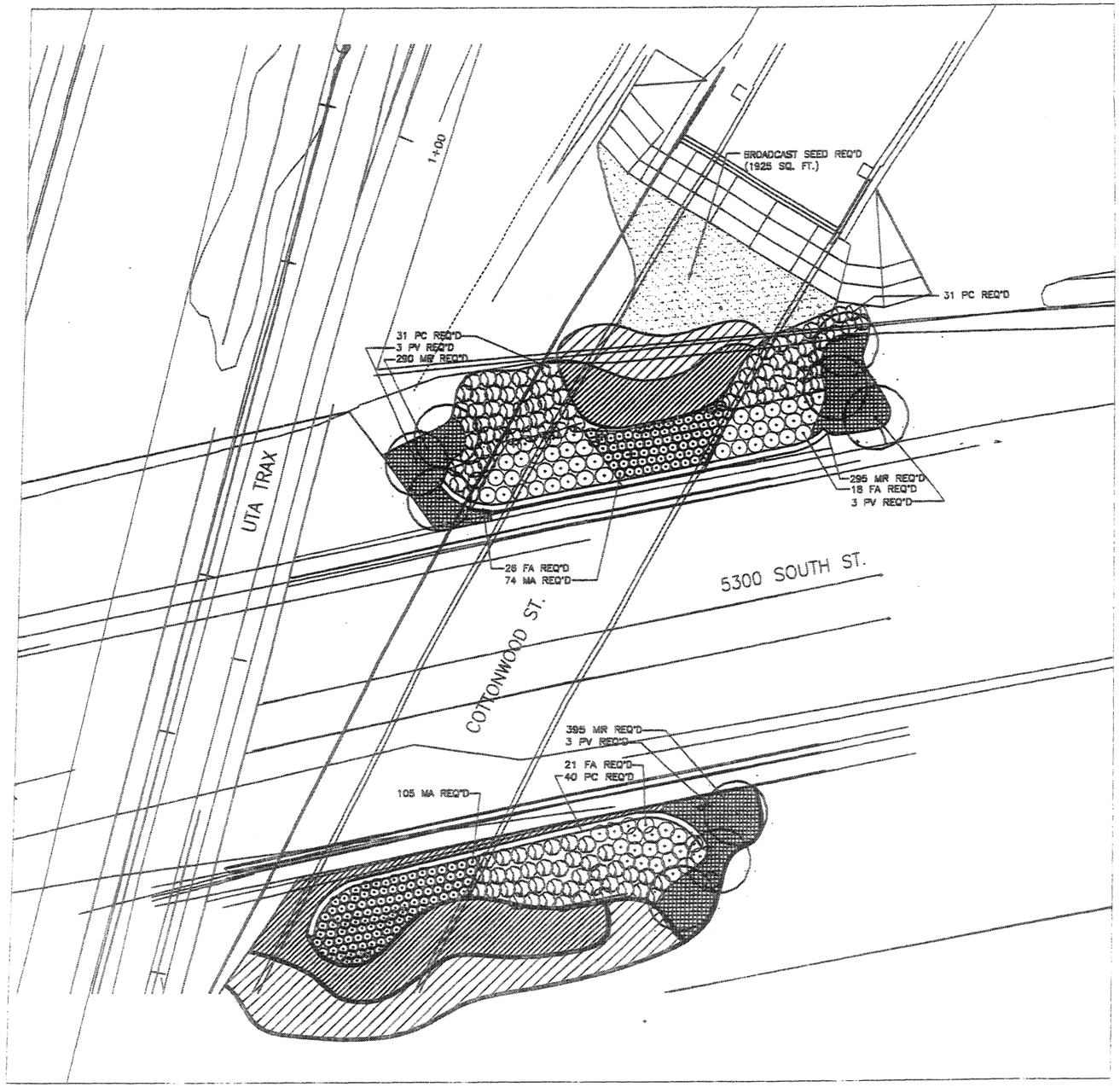

1"= 40' (11 X 17)

NORTH (8/14/03)

RELEASE FOR CONSTRUCTION

NO.	DATE	DESCRIPTION

MURRAY CITY CORPORATION
DEPARTMENT OF PUBLIC SERVICES -- ENGINEERING DIVISION
4646 SOUTH 500 WEST, MURRAY UT, 84123 -- (801) 270-2400

APPROVAL RECOMMEND — DATE — DESIGN ARCHITECT
APPROVED — DATE — PROJECT MANAGER

DESIGN RH 10/30/03 — CHECK TB 10/30/03 — QA AUDIT
DRAWN RH 10/30/03 — CHECK TB 10/30/03 — DATE
QUANT. RH 10/30/03 — CHECK TB 10/30/03 — BY

COTTONWOOD STREET
5600 SOUTH TO VINE STREET
5300 SOUTH LANDSCAPE PLAN

PROJECT NUMBER *HPP-STP-2148(1)0

Salt Lake County

SHEET NO. L5-2

IRRIGATION SCHEDULE

●	FULL CIRCLE POP-UP SHRUB SPRAY 10' RADIUS 1.58 GPM
◐	HALF CIRCLE POP-UP SHRUB SPRAY 10' RADIUS 0.79 GPM
◔	QUARTER CIRCLE POP-UP SHRUB SPRAY 10' RADIUS 0.39 GPM
▣	TREE BUBBLER 0.50 GPM
⊛	1" AUTOMATIC CONTROL VALVE
⊗	1 1/2" STOP & WASTE VALVE INSTALLED BY CONTRACTOR
■	QUICK COUPLER VALVE
▣	1 1/2" BACKFLOW PREVENTER
CC / CC	CONTROLLER
▤	ELECTRICAL FUSE, DISCONNECT, & PEDESTAL
————	1 1/2" PVC SCHED. 40 MAINLINE
————	PVC SCHED. 40 LATERAL LINES (SIZE AS SHOWN OR DIMEN.)

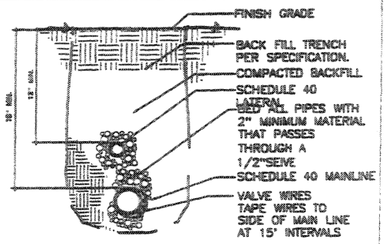

A Trenching Detail

Not to Scale

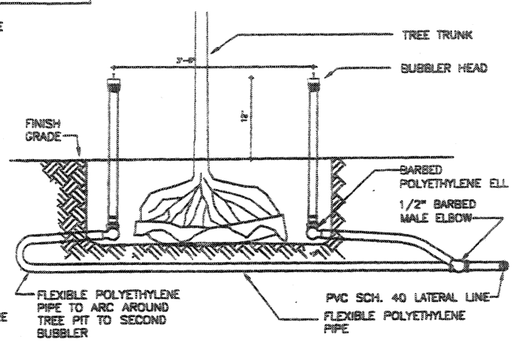

B Bubbler Detail

Not to Scale

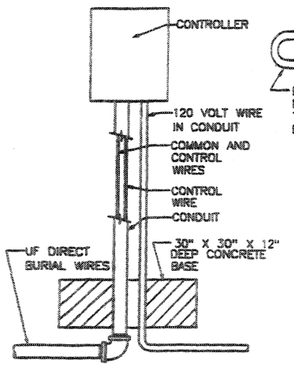

NOTES:
1. GALVANIZED STEEL CONDUIT FOR ALL CONDUIT ABOVE GROUND
2. ALL WIRING TO BE INSTALLED AS PER LOCAL CODE.
3. FUSE, DISCONNECT, PEDESTAL, ELECTRICAL SUPPLY FROM SOURCE TO BE FURNISHED BY CONTRACTOR
4. CONTRACTOR TO RUN ELECTRICAL SUPPLY FROM METER TO CONTROLLER.

C Pedestal Mounted Controller

Not to Scale

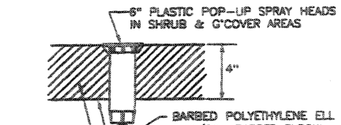

D Spray Pop-up Detail

Not to Scale

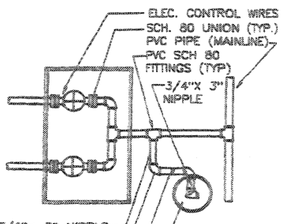

NOTE:
1. TEFLON TAPE REQUIRED ON THREADED CONNECTIONS.

(PLAN)

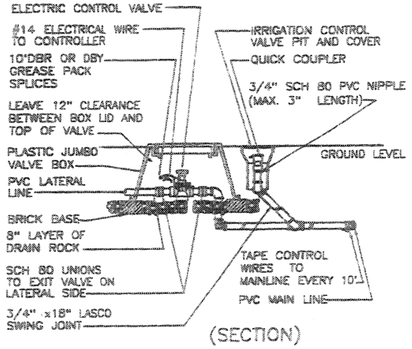

(SECTION)

F Automatic Control Valve Assembly

Not to Scale

IRRIGATION SCHEDULE 5300 South

PRESSURIZED IRRIGATION SYSTEM REQ'D

LUMP SUM

SHEET	POLYVINYL CHLORIDE (PVC) PIPE SCHEDULE 40 LATERAL PIPE				POLYVINYL CHLORIDE (PVC) PIPE SCHEDULE 40 MAINLINE PIPE	AUTOMATIC CONTROL VALVE	AUTOMATIC CONTROL VALVE ASSEMBLY	IRRIGATION CONTROLLER	6" POP-UP SPRAY HEAD	BUBBLER HEAD	QUICK COUPLER	BACKFLOW PREVENTER	STOP AND WASTE
	3/4"	1"	1 1/4"	1 1/2"	1 1/2"	1"							
	LIN FT	LIN FT	LIN FT	LIN FT	LIN FT	EACH	EACH	EACH	EACH	EACH	EACH	EACH	EACH
LS-3	1565	75	38	25	900	12	7	2	138	18	6	2	2

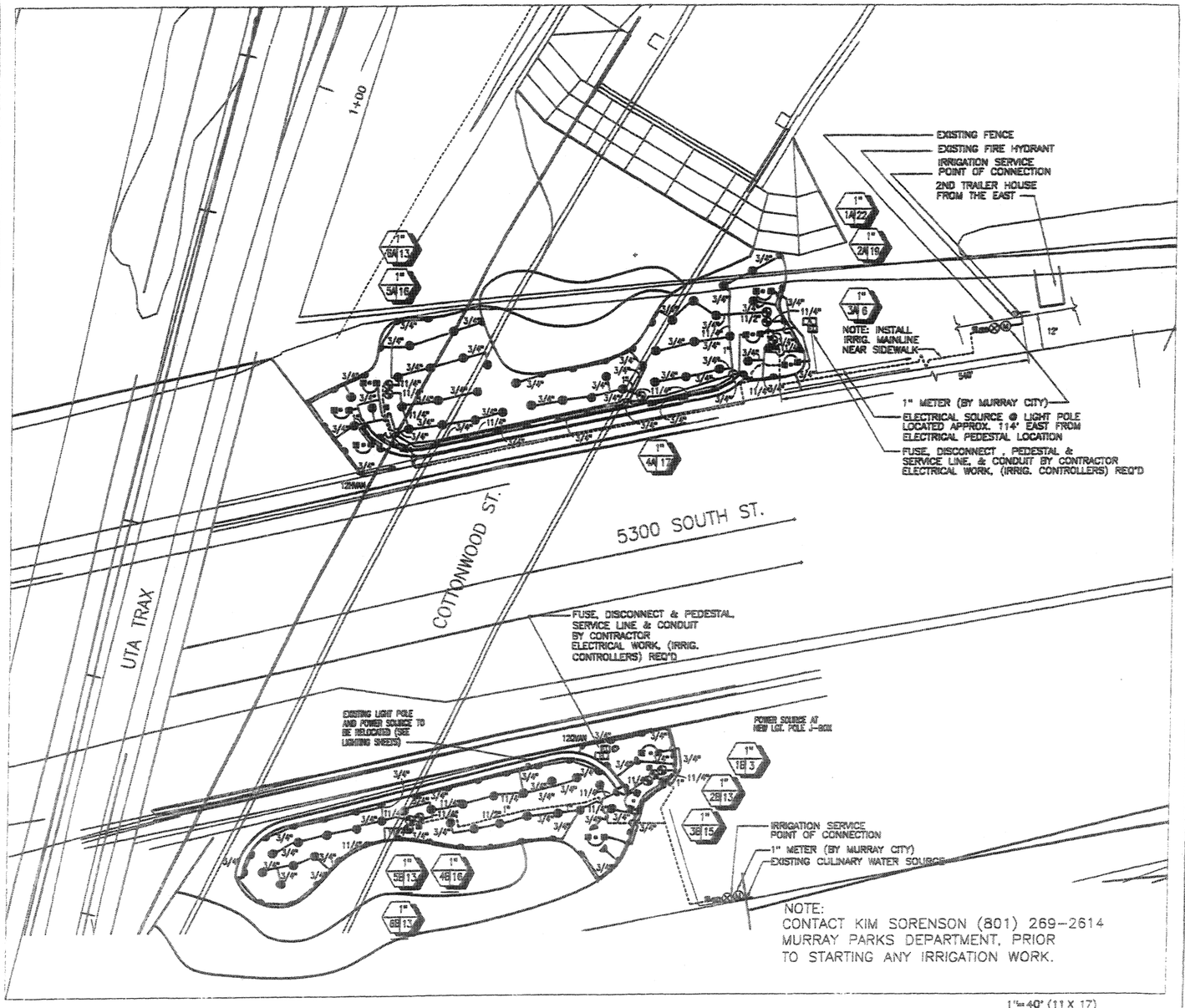

1"=40' (11 X 17)

NORTH (8/14/03)

NO.	DATE	DESCRIPTION
		RELEASE FOR CONSTRUCTION

MURRAY CITY CORPORATION
DEPARTMENT OF PUBLIC SERVICES -- ENGINEERING DIVISION
4646 SOUTH 500 WEST, MURRAY UT, 84123 -- (801) 270-2400

DESIGN BH 10/30/03 | DRAWN BH 10/30/03 | QUANT. BH 10/30/03
CHECK TB 10/30/03 | CHECK TB 10/30/03 | CHECK TB 10/30/03
QA AUDIT | DATE | BY

APPROVAL RECOMMEND — DATE — DESIGN ARCHITECT
APPROVED — DATE — PROJECT MANAGER

COTTONWOOD STREET
5600 SOUTH TO VINE STREET
5300 SOUTH IRRIGATION PLAN

PROJECT NUMBER *HPP-STP-2148(1)0

Salt Lake County

SHEET NO. 18-1

$FILE$ $DATE$ $TIME$

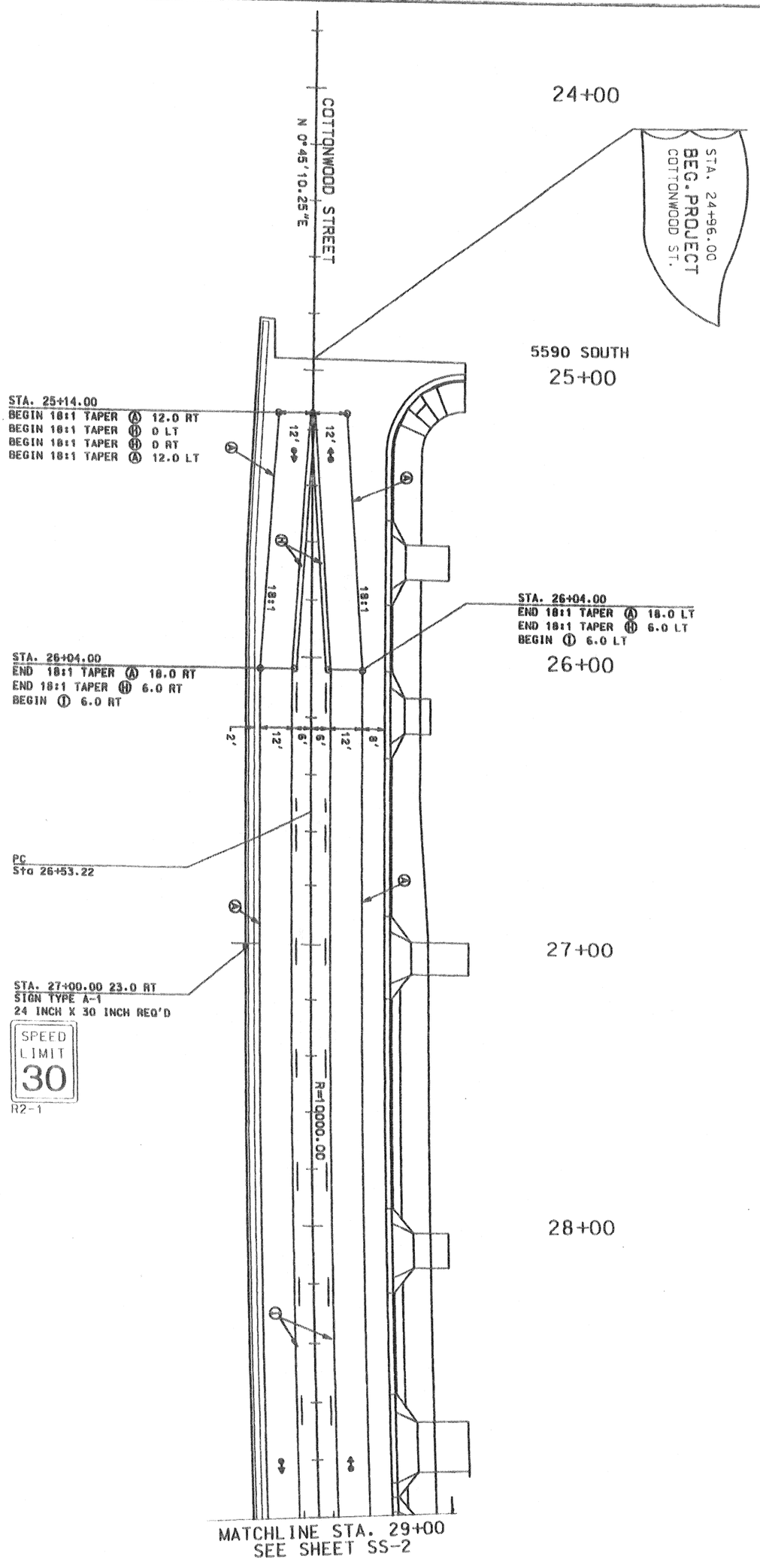

LEGEND:

LANE DIRECTION ARROW
(FOR INFORMATION ONLY)

NOTE:

ALL DIMENSIONS ARE IN FEET
UNLESS NOTED OTHERWISE.

PAVEMENT MARKING PAINT REQ'D

- (A) 4 INCH SOLID WHITE
- (B) 8 INCH SOLID WHITE
- (C) 12 INCH SOLID WHITE
- (D) 4 INCH SKIP WHITE
- (E) 4 INCH DOTTED WHITE
- (F) 8 INCH LANE DROP WHITE
- (G) 4 INCH SOLID YELLOW
- (H) 4 INCH SOLID DOUBLE YELLOW
- (I) 4 INCH SOLID SKIP YELLOW

40 20 0 40

N

SALT LAKE COUNTY	COTTONWOOD STREET 5600 SOUTH TO VINE STREET SIGNING AND STRIPING PROJECT NUMBER *HPP-STP-2148(1)0	MURRAY CITY CORPORATION DEPARTMENT OF PUBLIC SERVICES -- ENGINEERING DIVISION 4646 SOUTH 500 WEST, MURRAY UT, 84123 - (801) 270-2400 APPROVAL RECOMM. ____ DATE ____ DESIGN ENGINEER APPROVED ____ DATE ____ PROJECT MANAGER DESIGN RP 5/03 CHECK CW 5/03 QA AUDIT DRAWN AT 5/03 CHECK CW 5/03 DATE QUANT. ____ CHECK ____ BY	RELEASE FOR CONSTRUCTION NO. / DATE / DESCRIPTION	

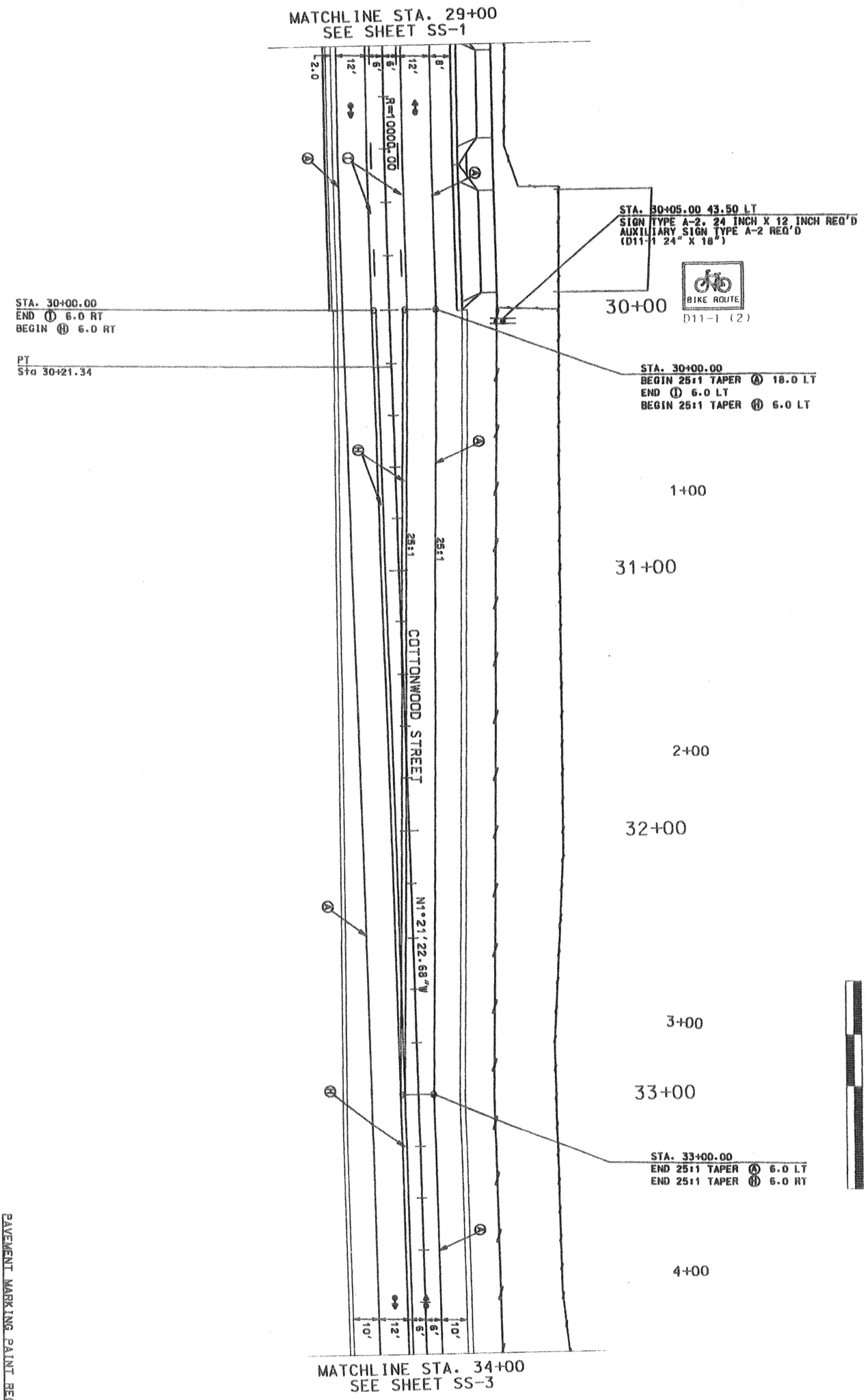

LEGEND:

◄● LANE DIRECTION ARROW (FOR INFORMATION ONLY)

NOTE:

ALL DIMENSIONS ARE IN FEET UNLESS NOTED OTHERWISE.

PAVEMENT MARKING PAINT REQ'D

Ⓐ	4 INCH SOLID WHITE
Ⓑ	8 INCH SOLID WHITE
Ⓒ	12 INCH SOLID WHITE
Ⓓ	4 INCH SKIP WHITE
Ⓔ	4 INCH DOTTED WHITE
Ⓕ	8 INCH LANE DROP WHITE
Ⓖ	4 INCH SOLID YELLOW
Ⓗ	4 INCH SOLID DOUBLE YELLOW
Ⓘ	4 INCH SOLID SKIP YELLOW

SHEET NO. SS-2

SALT LAKE COUNTY

COTTONWOOD STREET
5600 SOUTH TO VINE STREET
SIGNING AND STRIPING

PROJECT NUMBER *HPP-STP-2148(1)0

MURRAY CITY CORPORATION
DEPARTMENT OF PUBLIC SERVICES -- ENGINEERING DIVISION
4646 SOUTH 500 WEST, MURRAY UT, 84123 - (801) 270-2400

APPROVAL RECOMM. DATE DESIGN ENGINEER	DESIGN RP 5/03	CHECK CW 5/03	QA AUDIT
APPROVED DATE PROJECT MANAGER	DRAWN AT 5/03	CHECK CW 5/03	DATE
	QUANT.	CHECK	BY

RELEASE FOR CONSTRUCTION

NO.	DATE	DESCRIPTION

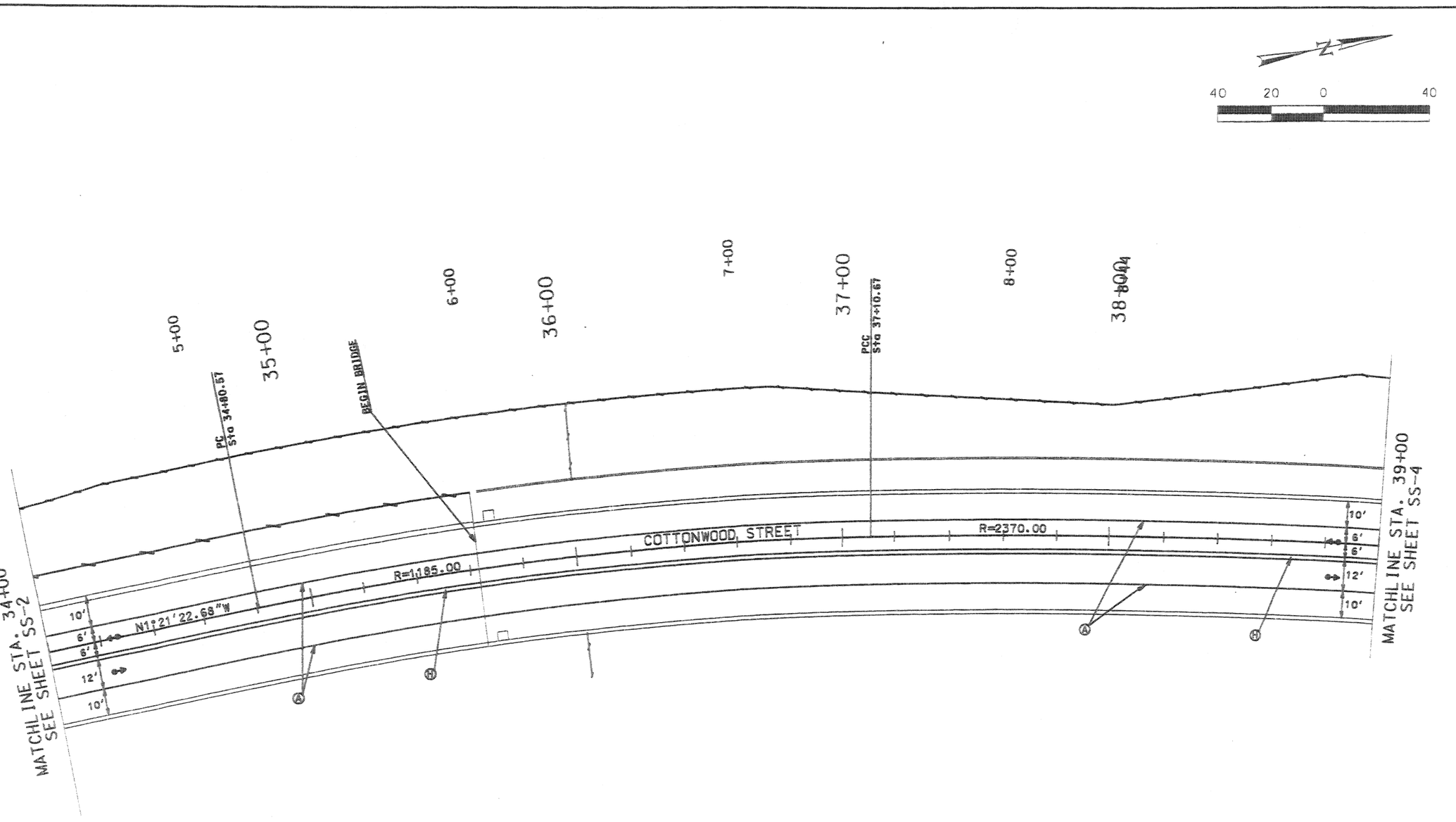

PAVEMENT MARKING PAINT REQ'D

- (A) 4 INCH SOLID WHITE
- (B) 8 INCH SOLID WHITE
- (C) 12 INCH SOLID WHITE
- (D) 4 INCH SKIP WHITE
- (E) 4 INCH DOTTED WHITE
- (F) 8 INCH LANE DROP WHITE
- (G) 4 INCH SOLID YELLOW
- (H) 4 INCH SOLID DOUBLE YELLOW
- (I) 4 INCH SOLID SKIP YELLOW

LEGEND:

↔ LANE DIRECTION ARROW (FOR INFORMATION ONLY)

NOTE:

ALL DIMENSIONS ARE IN FEET UNLESS NOTED OTHERWISE.

RELEASE FOR CONSTRUCTION

NO.	DATE	DESCRIPTION

MURRAY CITY CORPORATION
DEPARTMENT OF PUBLIC SERVICES — ENGINEERING DIVISION
4646 SOUTH 500 WEST, MURRAY UT. 84123 — (801) 270-2400

DESIGN RP 5/03 CHECK CW 5/03 QA AUDIT
DRAWN AT 5/03 CHECK CW 5/03 DATE
QUANT. CHECK BY

APPROVAL RECOMM. DATE DESIGN ENGINEER
APPROVED DATE PROJECT MANAGER

COTTONWOOD STREET
5600 SOUTH TO VINE STREET
SIGNING AND STRIPING

PROJECT NUMBER *HPP-STP-2148(1)0

SALT LAKE COUNTY

SHEET NO. SS-3

DATES
TIMES
FILES

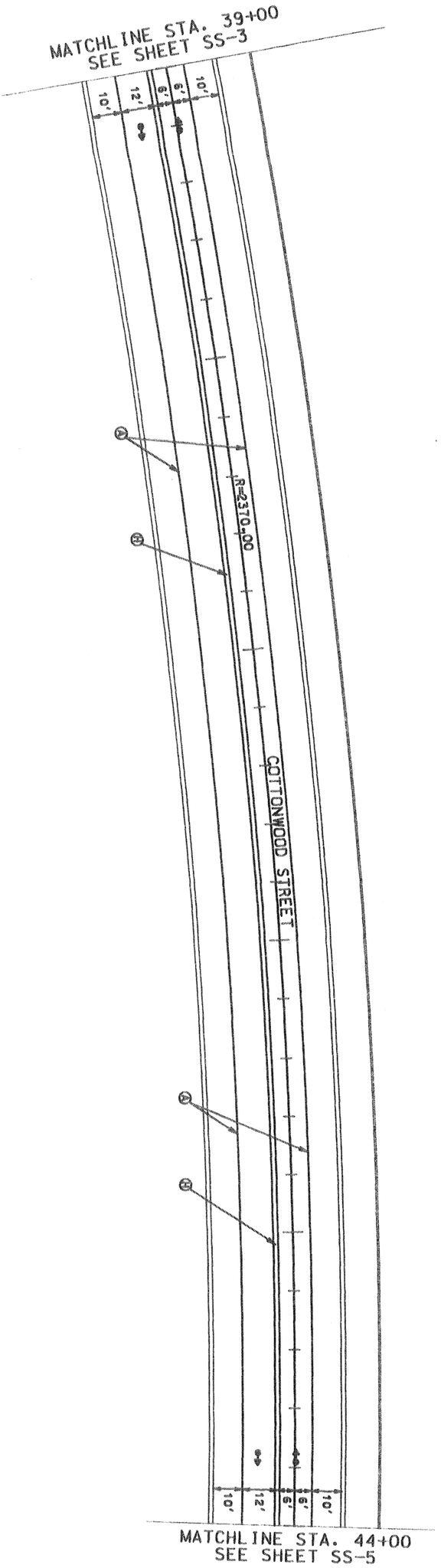

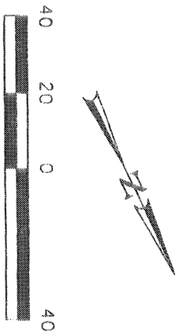

LEGEND:

LANE DIRECTION ARROW (FOR INFORMATION ONLY)

NOTE:

ALL DIMENSIONS ARE IN FEET UNLESS NOTED OTHERWISE.

PAVEMENT MARKING PAINT REQ'D

- (A) 4 INCH SOLID WHITE
- (B) 8 INCH SOLID WHITE
- (C) 12 INCH SOLID WHITE
- (D) 4 INCH SKIP WHITE
- (E) 4 INCH DOTTED WHITE
- (F) 8 INCH LANE DROP WHITE
- (G) 4 INCH SOLID YELLOW
- (H) 4 INCH SOLID DOUBLE YELLOW
- (I) 4 INCH SOLID SKIP YELLOW

SALT LAKE COUNTY	COTTONWOOD STREET	MURRAY CITY CORPORATION				RELEASE FOR CONSTRUCTION
	5600 SOUTH TO VINE STREET	DEPARTMENT OF PUBLIC SERVICES -- ENGINEERING DIVISION				NO. / DATE / DESCRIPTION
	SIGNING AND STRIPING	4646 SOUTH 500 WEST, MURRAY UT, 84123 - (801) 270-2400				
	PROJECT NUMBER *HPP-STP-2148(1)0	APPROVAL RECOMM. DATE DESIGN ENGINEER	DESIGN RP 5/03	CHECK CW 5/03	QA AUDIT	
			DRAWN AT 5/03	CHECK CW 5/03	DATE	
		APPROVED DATE PROJECT MANAGER	QUANT.	CHECK	BY	

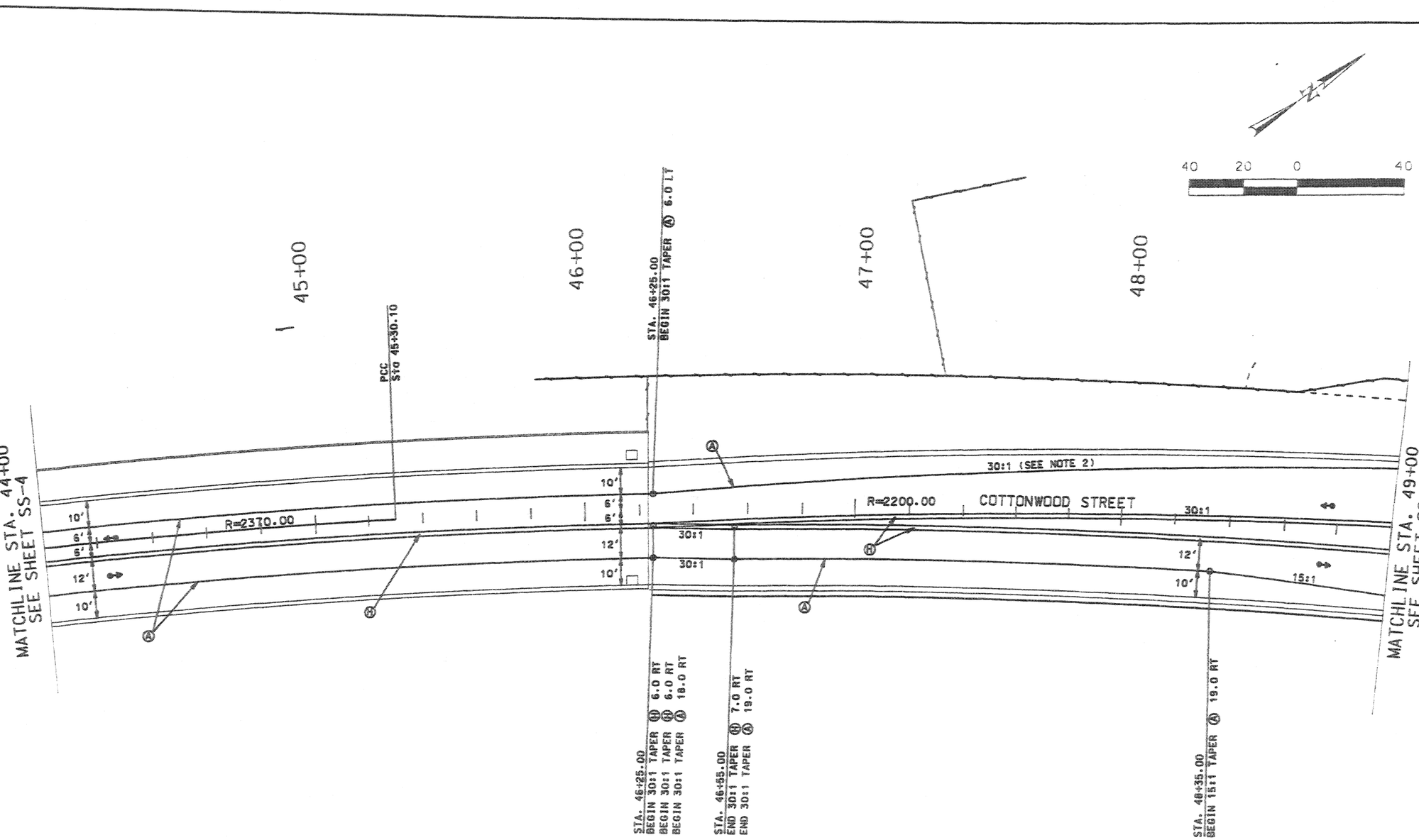

LEGEND:

LANE DIRECTION ARROW (FOR INFORMATION ONLY)

NOTES:

1. ALL DIMENSIONS ARE IN FEET UNLESS NOTED OTHERWISE.
2. 30:1 TAPER RELATIVE TO DOUBLE YELLOW STRIPE. 15:1 TAPER RELATIVE TO CENTERLINE.

PAVEMENT MARKING PAINT REQ'D

- Ⓐ 4 INCH SOLID WHITE
- Ⓑ 8 INCH SOLID WHITE
- Ⓒ 12 INCH SOLID WHITE
- Ⓓ 4 INCH SKIP WHITE
- Ⓔ 4 INCH DOTTED WHITE
- Ⓕ 8 INCH LANE DROP WHITE
- Ⓖ 4 INCH SOLID YELLOW
- Ⓗ 4 INCH SOLID DOUBLE YELLOW
- Ⓘ 4 INCH SOLID SKIP YELLOW

RELEASE FOR CONSTRUCTION

NO.	DATE	DESCRIPTION

MURRAY CITY CORPORATION
DEPARTMENT OF PUBLIC SERVICES -- ENGINEERING DIVISION
4646 SOUTH 500 WEST, MURRAY UT. 84123 -- (801) 270-2400

DESIGN RP 5/03 CHECK CW 5/03 QA AUDIT
DRAWN AT 5/03 CHECK CW 5/03 DATE
QUANT. CHECK BY

APPROVAL RECOMM. DESIGN ENGINEER DATE
APPROVED PROJECT MANAGER DATE

COTTONWOOD STREET
5600 SOUTH TO VINE STREET
SIGNING AND STRIPING

PROJECT NUMBER ※HPP-STP-2148(110)

SALT LAKE COUNTY

SHEET NO. SS-5

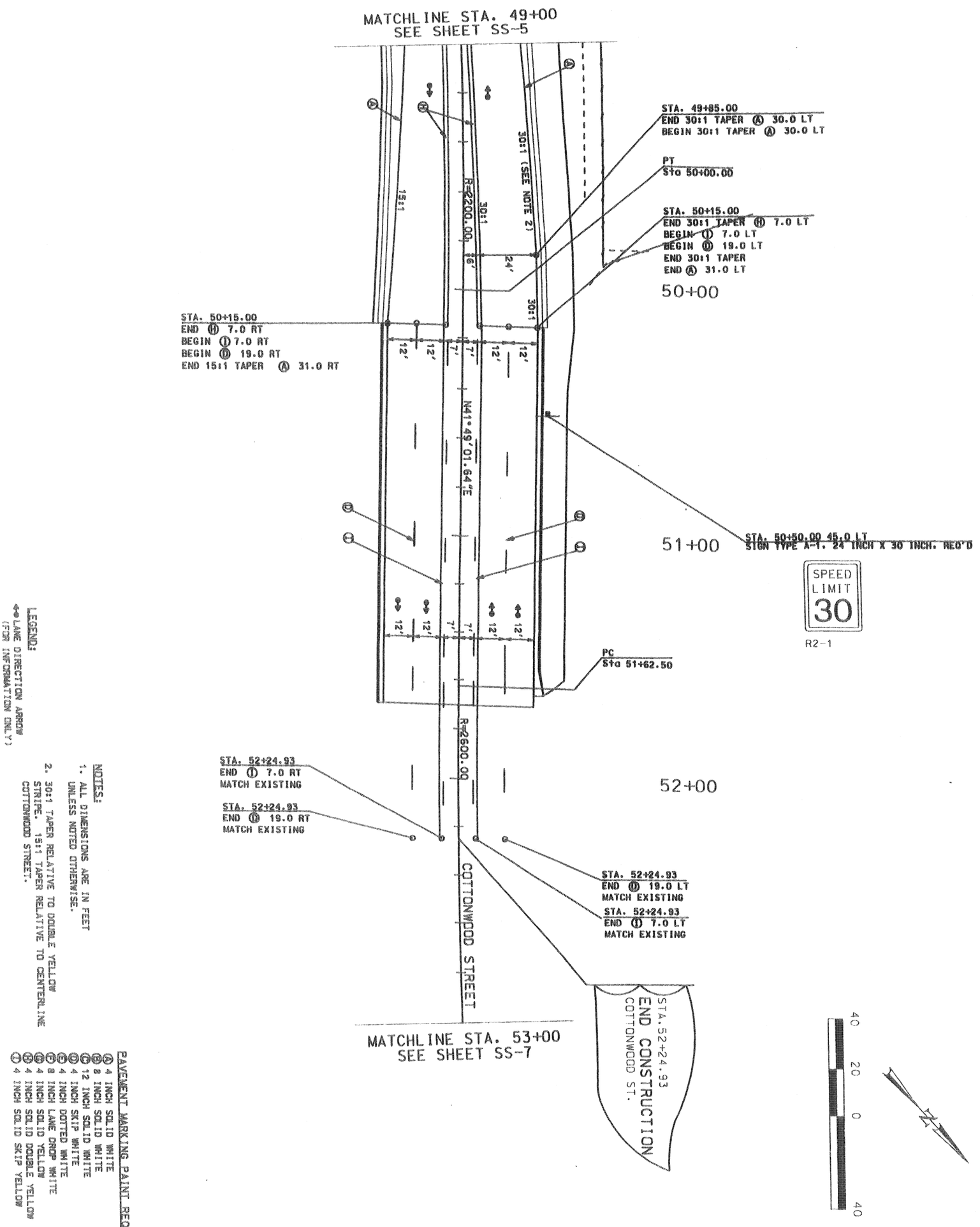

LEGEND:
⟷ LANE DIRECTION ARROW (FOR INFORMATION ONLY)

NOTES:
1. ALL DIMENSIONS ARE IN FEET UNLESS NOTED OTHERWISE.
2. 30:1 TAPER RELATIVE TO DOUBLE YELLOW STRIPE. 15:1 TAPER RELATIVE TO CENTERLINE COTTONWOOD STREET.

PAVEMENT MARKING PAINT REQ'D

Ⓐ	4 INCH SOLID WHITE
Ⓑ	8 INCH SOLID WHITE
Ⓒ	12 INCH SOLID WHITE
Ⓓ	4 INCH SKIP WHITE
Ⓔ	4 INCH DOTTED WHITE
Ⓕ	8 INCH LANE DROP WHITE
Ⓖ	4 INCH SOLID YELLOW
Ⓗ	4 INCH SOLID DOUBLE YELLOW
Ⓘ	4 INCH SOLID SKIP YELLOW

SHEET NO. SS-6

SALT LAKE COUNTY

COTTONWOOD STREET
5600 SOUTH TO VINE STREET
SIGNING AND STRIPING

PROJECT NUMBER *HPP-STP-2148(1)0

MURRAY CITY CORPORATION
DEPARTMENT OF PUBLIC SERVICES -- ENGINEERING DIVISION
4646 SOUTH 500 WEST, MURRAY UT, 84123 - (801) 270-2400

APPROVAL RECOMM. DATE DESIGN ENGINEER
APPROVED DATE PROJECT MANAGER

DESIGN RP 5/03 CHECK CW 5/03 QA AUDIT
DRAWN AT 5/03 CHECK CW 5/03 DATE
QUANT. CHECK BY

RELEASE FOR CONSTRUCTION

NO.	DATE	DESCRIPTION

$FILE$ $DATE$ $TIME$

MATCHLINE STA. 53+00
SEE SHEET SS-6

40 20 0 40

STA. 53+65.00 45.0 LT
SIGN TYPE A-1, 36 INCH X 36 INCH REQ'D

54+00

W4-2R

STA. 55+00.00 39.50 RT
SIGN TYPE A-1, 48 INCH X 24 INCH REQ'D

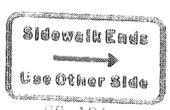

R9-10A

R=2600.00

55+00

STA. 55+00.00 45.00 LT
SIGN TYPE A-2, 24 INCH X 12 INCH REQ'D
AUXILIARY SIGN TYPE A-2 REQ'D
(D11-1 24" X 18")

D11 1 (2)

WOODROW

56+00

COTTONWOOD STREET

57+00

UTA TRAX MURRAY CENTRAL
(5200 SOUTH)

58+00

SALT LAKE COUNTY	COTTONWOOD STREET 5600 SOUTH TO VINE STREET SIGNING AND STRIPING PROJECT NUMBER *HPP-STP-2148(1)0	MURRAY CITY CORPORATION DEPARTMENT OF PUBLIC SERVICES -- ENGINEERING DIVISION 4646 SOUTH 500 WEST, MURRAY UT, 84123 - (801) 270-2400 APPROVAL RECOMM. ____ DATE ____ DESIGN ENGINEER APPROVED ____ DATE ____ PROJECT MANAGER	DESIGN RP 5/03 CHECK CW 5/03 QA AUDIT DRAWN AT 5/03 CHECK CW 5/03 DATE QUANT. ____ CHECK ____ BY	RELEASE FOR CONSTRUCTION NO. DATE DESCRIPTION		

SHEET NO. SS-7

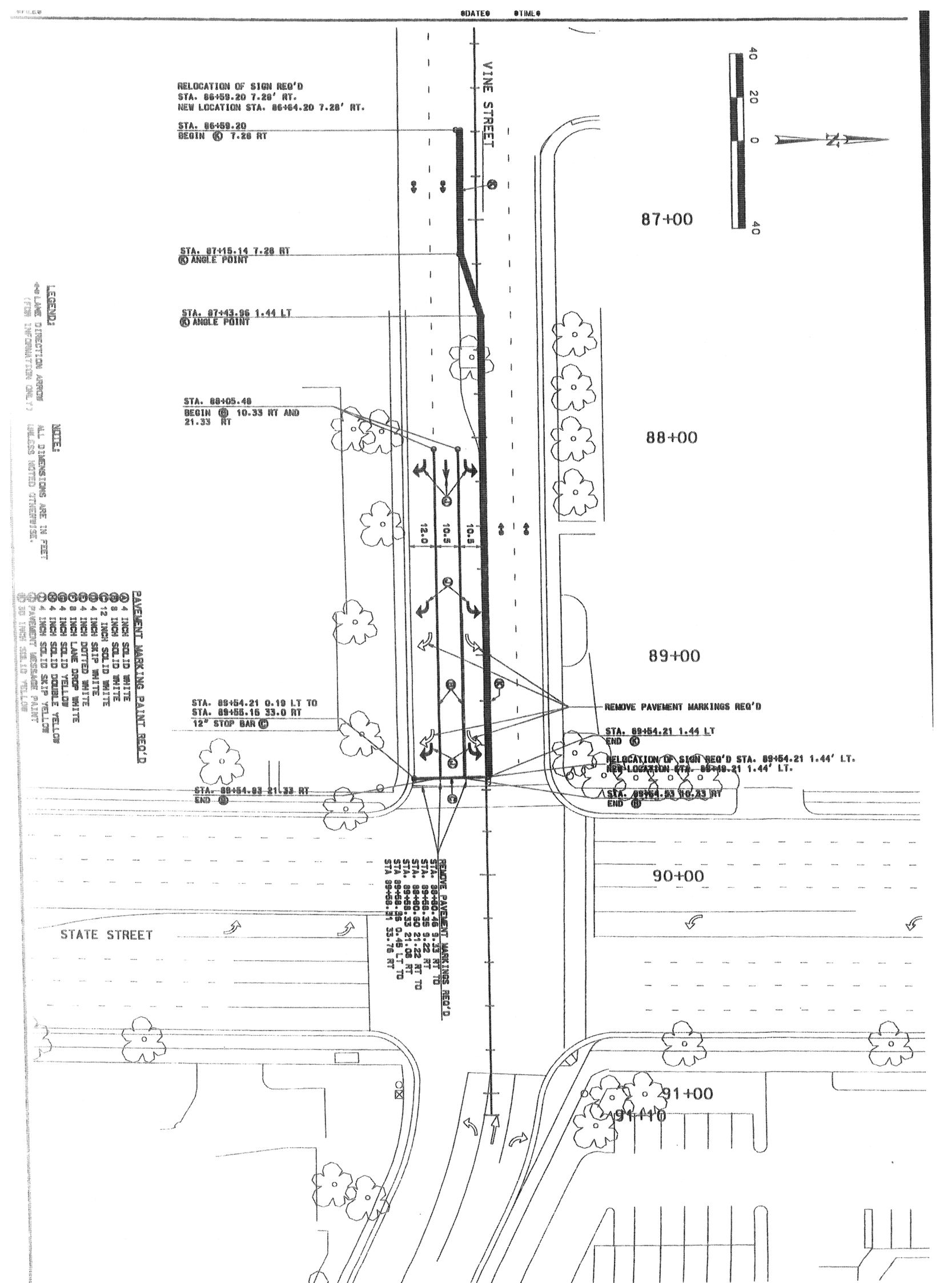

SHEET NO. 55-B

SALT LAKE COUNTY

COTTONWOOD STREET
5600 SOUTH TO VINE STREET
SIGNING AND STRIPING

PROJECT NUMBER *HPP-STP-2148(1)0

MURRAY CITY CORPORATION
DEPARTMENT OF PUBLIC SERVICES -- ENGINEERING DIVISION
4646 SOUTH 500 WEST, MURRAY UT, 84123 - (801) 270-2400

APPROVAL RECOMM. _____ DATE _____ DESIGN ENGINEER
APPROVED _____ DATE _____ PROJECT MANAGER

DESIGN	CP 8/03	CHECK	DTP 8/03	QA AUDIT
DRAWN	CP 8/03	CHECK	DTP 8/03	DATE
QUANT.	CP 10/03	CHECK	DTP 10/03	BY

RELEASE FOR CONSTRUCTION

NO.	DATE	DESCRIPTION

$FILE$

$DATE$ $TIME$

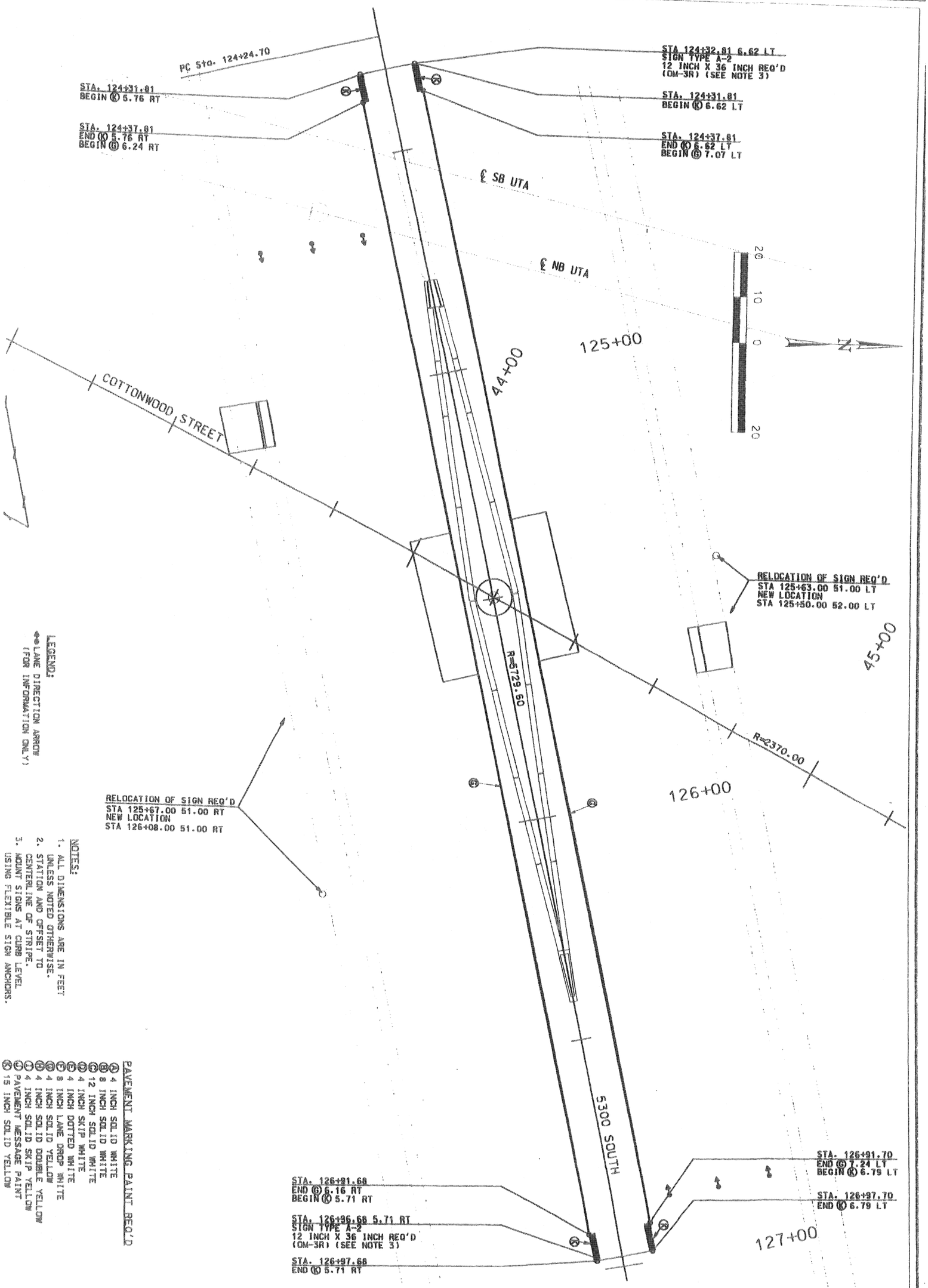

LEGEND:

◆ LANE DIRECTION ARROW (FOR INFORMATION ONLY)

NOTES:

1. ALL DIMENSIONS ARE IN FEET UNLESS NOTED OTHERWISE.
2. STATION AND OFFSET TO CENTERLINE OF STRIPE.
3. MOUNT SIGNS AT CURB LEVEL USING FLEXIBLE SIGN ANCHORS.

PAVEMENT MARKING PAINT REQ'D

Ⓐ 4 INCH SOLID WHITE
Ⓑ 8 INCH SOLID WHITE
Ⓒ 12 INCH SOLID WHITE
Ⓓ 4 INCH SKIP WHITE
Ⓔ 4 INCH DOTTED WHITE
Ⓕ 8 INCH LANE DROP WHITE
Ⓖ 4 INCH SOLID YELLOW
Ⓗ 4 INCH SOLID DOUBLE YELLOW
Ⓘ 4 INCH SOLID SKIP YELLOW
Ⓙ PAVEMENT MESSAGE PAINT
Ⓚ 18 INCH SOLID YELLOW

SHEET NO. 35 OF 36 SHEETS

SALT LAKE COUNTY

COTTONWOOD STREET
5600 SOUTH TO VINE STREET
SIGNING AND STRIPING

PROJECT NUMBER *HPP-STP-2148(1)0

MURRAY CITY CORPORATION
DEPARTMENT OF PUBLIC SERVICES -- ENGINEERING DIVISION
4646 SOUTH 500 WEST, MURRAY UT, 84123 - (801) 270-2400

APPROVAL RECOMM. DATE DESIGN ENGINEER
APPROVED DATE PROJECT MANAGER

DESIGN CP 8/03 CHECK DTP 8/03 QA AUDIT
DRAWN CP 8/03 CHECK DTP 8/03 DATE
QUANT. CP 8/03 CHECK DTP 8/03 BY

RELEASE FOR CONSTRUCTION

NO.	DATE	DESCRIPTION

$DATE$ $TIME$

HIGHWAY LIGHTING SYSTEM (COTTONWOOD STREET) REQ'D
(INCLUDES LIGHTING PLANS LT-1 TO LT-6)

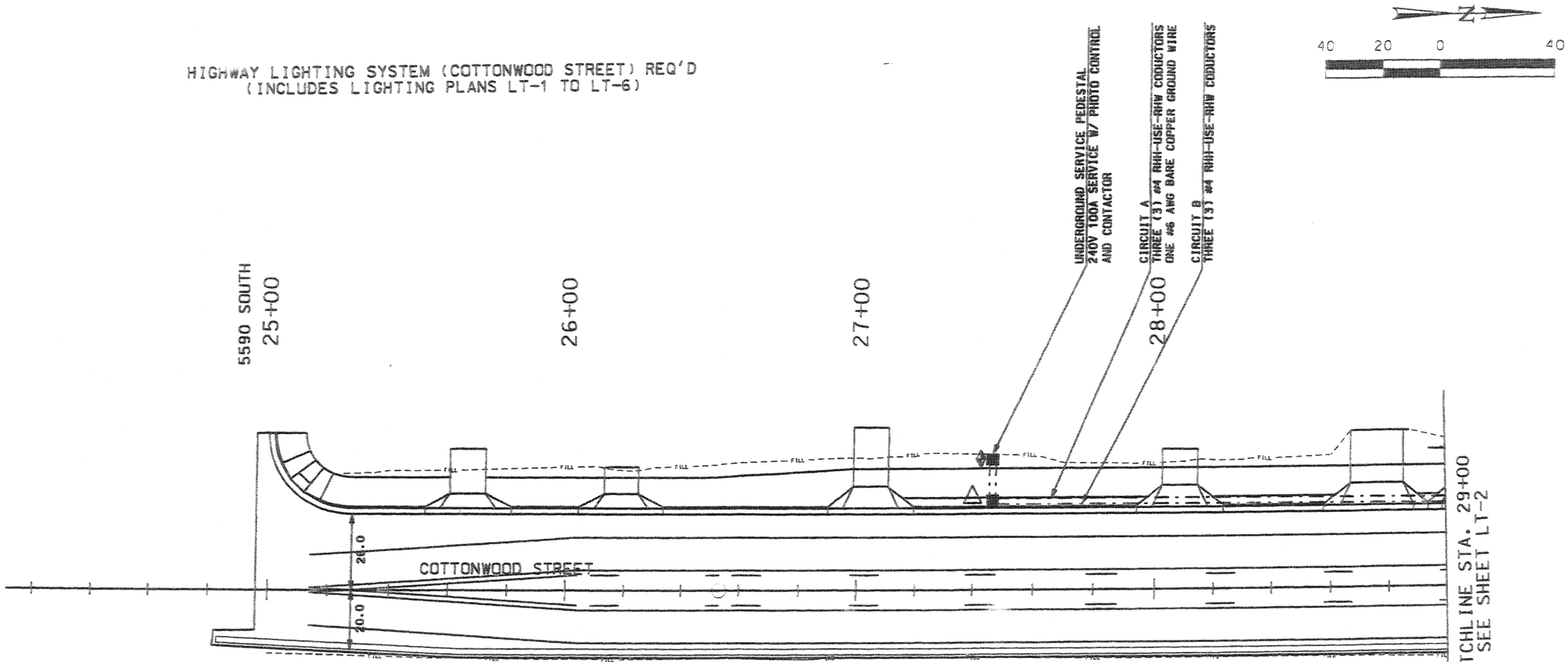

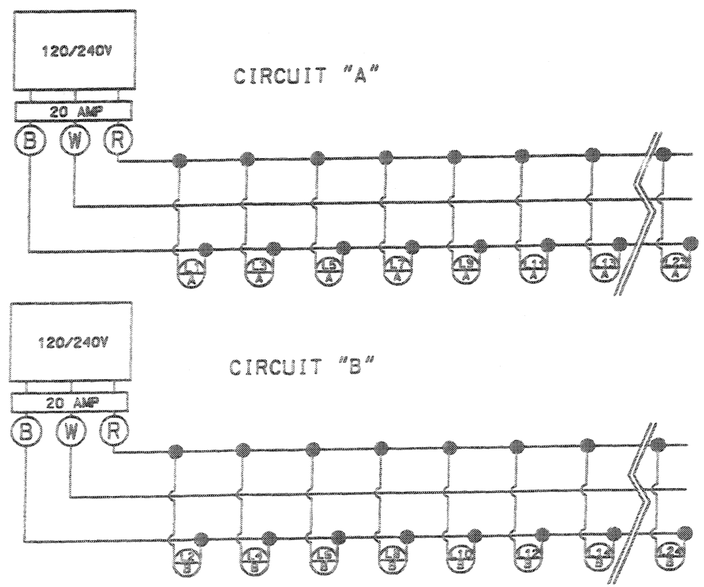

NOTES

1. ALL CIRCUITS CONTAIN (3) #6 AWG RHH-USE-RHW CONDUCTORS AND ONE #6 AWG BARE COPPER GROUND WIRE UNLESS OTHERWISE NOTED.
2. JUNCTION BOXES NOT ALLOWED IN ROADWAY. RUN CONTINUOUS CONDUIT FROM JUNCTION BOX IN BARRIER TO ADJACENT JUNCTION BOX.
3. CONDUIT ROUTING AND JUNCTION BOX LOCATION SHOWN SCHEMATICALLY. FIELD ADJUST CONDUIT ROUTING AND JUNCTION BOX LOCATION AS REQUIRED.
4. USE WASHINGTON POSTLITE LUMINAIRE. 240V 150W HPS. TYPE III DISTRIBUTION. IES 47060.
5. USE 3 WIRE 240V SINGLE PHASE CIRCUITS. SEE IRRIGATION PLAN FOR 120V POWER REQUIREMENTS.
6. ALL HIGHWAY LIGHTING PAID FOR AS LUMP SUM.
7. CONTACT KELLY PETERSON AT MURRAY CITY POWER (264-2720) TO COORDINATE TRANSFORMER CONNECTION.

LEGEND

- △ TRANSFORMER CONNECTION
- ⌖ LIGHT POLE ASSEMBLY
  22' 10" NORTH YORKSHIRE SERIES CAST IRON POLE
  150W 240V HPS WASHINGTON POSTLITE LUMINAIRE
  (SEE SPECIAL PROVISION 16525M FOR DETAILS)
- - - - - 1½" PVC CONDUIT
  USE SCHEDULE 80 FOR ROADWAY CROSSING
  USE SCHEDULE 40 ALL OTHER LOCATIONS
- ■ TYPE I DOUBLE JUNCTION BOX
  GROUND ROD ⅝" X 8'
- (XX / XX) — POLE # / CIRCUIT

ALL DIMENSIONS ARE IN FEET UNLESS NOTED OTHERWISE.

RELEASE FOR CONSTRUCTION

NO.	DATE	DESCRIPTION

MURRAY CITY CORPORATION
DEPARTMENT OF PUBLIC SERVICES -- ENGINEERING DIVISION
4646 SOUTH 500 WEST, MURRAY UT. 84123 ~ (801) 270-2400

DESIGN	JKM	1/03	CHECK CP	9/03
DRAWN	BCH	1/03	CHECK CP	9/03
QUANT.			CHECK	

QA AUDIT
DATE
BY

APPROVAL RECOMMENDED — DESIGN ENGINEER — DATE
APPROVED — PROJECT MANAGER — DATE

COTTONWOOD STREET
5600 SOUTH TO VINE STREET
LIGHTING PLAN

PROJECT NUMBER *HPP-STP-2148(11)0

SALT LAKE COUNTY

SHEET NO. LT-1

INDEX OF SHEETS

1	SITUATION AND LAYOUT 1
2	SITUATION AND LAYOUT 2
3	SITUATION AND LAYOUT 3
4	UTILITY PLAN
5-5J	SOIL DATA
6	FOUNDATION PLAN 1
7	FOUNDATION PLAN 2
8	DRIVEN PILE DETAILS
9	FOOTING DETAILS - BENT 1
10	FOOTING DETAILS - BENTS 2 AND 4
11	FOOTING DETAILS - BENT 3
12	FOOTING DETAILS - BENT 5
13	BENT 1 PLAN AND ELEVATION
14	BENT 1 DETAILS
15	BENTS 2 AND 4 PLAN AND ELEVATION
16	BENTS 2 AND 4 DETAILS
17	BENT 3 PLAN AND ELEVATION
18	BENT 3 COLUMN DETAILS
19	BENT 3 BENT CAP DETAILS
20	BENT 3 DIAPHRAGM DETAILS
21	BENT 5 PLAN AND ELEVATION
22	BENT 5 DETAILS
23	ABUTMENT 6
24	ABUTMENT DETAILS
25	ABUTMENT WINGWALL
26	FRAMING PLAN 1
27	FRAMING PLAN 2
28	FRAMING PLAN 3
29	TYPICAL GIRDER DETAILS
30	CAMBER DIAGRAM
31	FIELD SPLICE DETAILS
32	CROSSFRAME AND DIAPHRAGM
33	EXPANSION BEARING
34	FIX BEARING
35	BENTS 1 AND 6 END DIAPHRAGM
36	DECK PLAN 1
37	DECK PLAN 2
38	DECK PLAN 3
39	DECK SECTION
40	SLAB POUR SEQUENCE
41	SCREED ELEVATIONS 1
42	SCREED ELEVATIONS 2
43	CONCRETE PARAPET DETAILS
44	ELECTRICAL DETAILS
45	SIDEWALK, CURB AND FENCE
46	APPROACH SLAB
47	APPROACH SLAB DETAILS
48	APPROACH SLAB DRAIN
48A	DRAIN DETAIL
49	EXPANSION JOINT
50	CONCRETE SLOPE PROTECTION
51	REINFORCING SCHEDULE 1
52	REINFORCING SCHEDULE 2
53	REINFORCING SCHEDULE 3
54	REINFORCING SCHEDULE 4

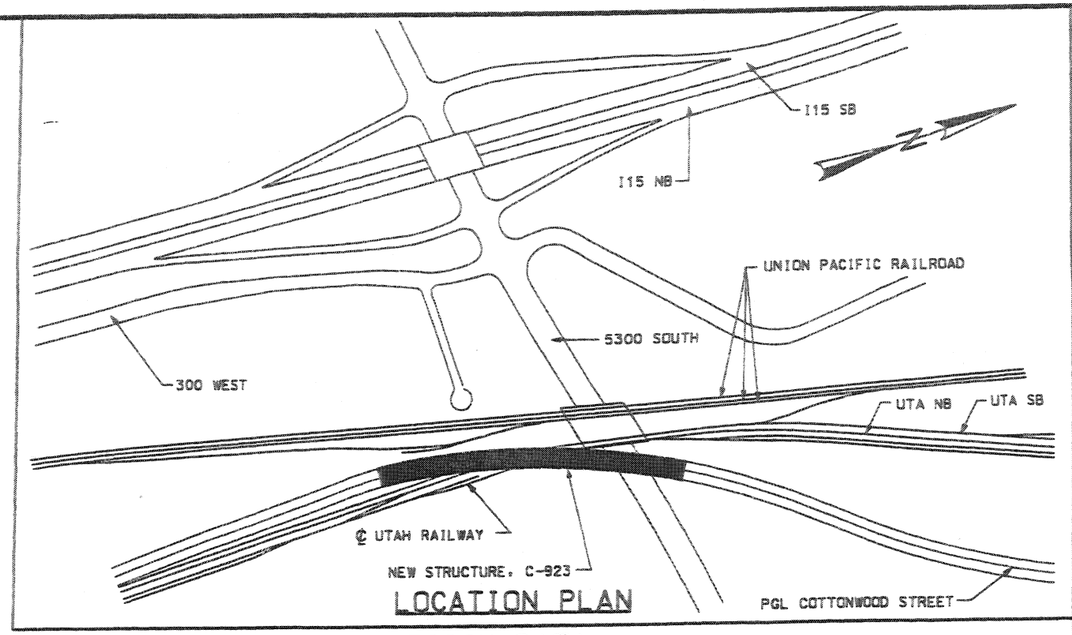

LOCATION PLAN

HORIZONTAL CURVE DATA

COTTONWOOD STREET — CURVE 1

D = 11°07'32" RT.
R = 1185.00'
L = 230.10'
T = 115.41'
PC STA 34+80.57
PI STA 35+95.98
PCC STA 37+10.67

5300 SOUTH — CURVE 4

D = 5°45'00" RT.
R = 5729.60'
L = 575.00'
T = 287.70'
PC STA 124+24.60
PI STA 127+12.30
PT STA 129+99.60

COTTONWOOD STREET — CURVE 2

D = 19°48'36" RT.
R = 2370.00'
L = 819.42'
T = 413.84'
PCC STA 37+10.67
PI STA 41+24.52
PCC STA 45+30.09

UTA SB — C144

D = 7°29'48.05" RT.
Dc = 2°59'59.20" RT.
R = 1910.00'
L = 249.91'
T = 125.13'
TS STA 1367+59.03
SC STA 1369+19.03
PI STA 1370+44.17
CS STA 1371+68.94
ST STA 1373+28.94

COTTONWOOD STREET — CURVE3

D = 12°14'16" RT.
R = 2200.00'
L = 469.90'
T = 235.85'
PCC STA 45+30.09
PI STA 47+65.95
PT STA 50+00.00

UTA NB — C127

D = 7°11'59.10" RT.
Dc = 2°49'20.83" RT.
R = 2030.00'
L = 255.09'
T = 127.71'
TS STA 367+35.58
SC STA 368+80.58
PI STA 370+08.29
CS STA 371+35.67
ST STA 373+51.82

VERTICAL CURVE DATA

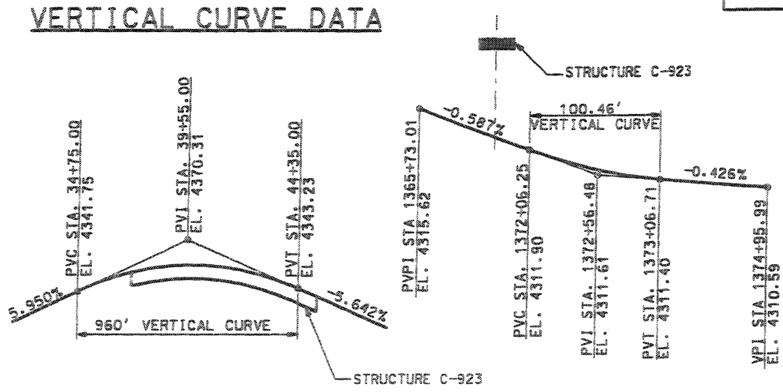

COTTONWOOD ST. PROFILE

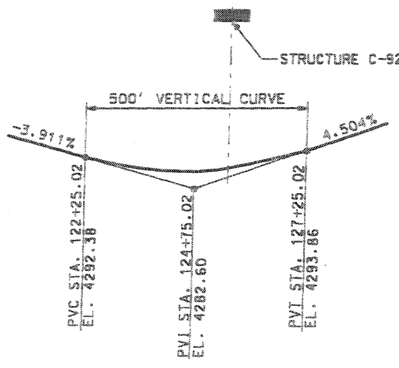

5300 SOUTH PROFILE

UTA SB PROFILE

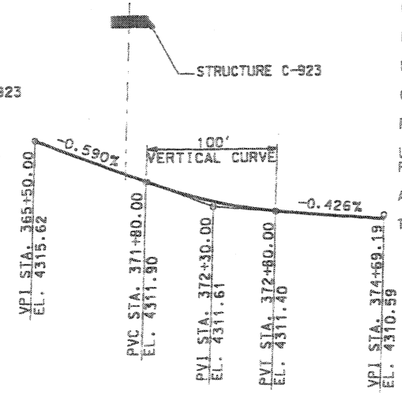

UTA NB PROFILE

DESIGN DATA

HS25-44 OR INTERSTATE ALTERNATE LOADING. IN ACCORDANCE WITH 1996 AASHTO SPECIFICATIONS AND INTERIMS.

CAST-IN-PLACE CONCRETE: f'c = 4 KSI (SUPERSTRUCTURE AND SUBSTRUCTURE), f'c = 3.650 KSI FOR SUBSTRUCTURE FOOTING, UNLESS OTHERWISE NOTED;
DESIGN METHOD: LOAD FACTOR DESIGN

POST-TENSION CONCRETE: f'c = 4 KSI f'ci = 3.6 KSI
ALLOWABLE STRESS DESIGN WITH HS 20-44. LOAD FACTOR DESIGN WITH HS25-44.

PRESTRESSING STRANDS: 0.6 INCH DIAMETER SEVEN WIRE; LOW RELAXATION STRAND; AASHTO M203; fpu = 270 KSI

STRUCTURAL STEEL: Fy = 50 KSI DESIGN METHOD : LOAD FACTOR DESIGN

STEEL PILES: Fy = 45 KSI

WEARING SURFACE: 0.5 INCH CONCRETE; FUTURE 35 PSF

DESIGN SPEED: 40 MPH

SEISMIC: DESIGN PER AASHTO STANDARD SPECIFICATIONS DIVISION I-A; SEISMIC PERFORMANCE CATEGORY (SPC) D; SEISMIC RESPONSE SPECTRUM CONSTRUCTED PER 2000 NEHRP RECOMMENDED PROVISIONS (FEMA 368) USING THE FOLLOWING: SEISMIC DESIGN PARAMETERS: (2500 YR RETURN PERIOD)
S_S = MAXIMUM CONSIDERED EARTHQUAKE GROUND MOTION AT 0.2s=1.66g
S_1 = MAXIMUM CONSIDERED EARTHQUAKE GROUND MOTION AT 1.0s=0.68g (I.E., A_{250} = 0.68g)
SITE CLASS D

GENERAL NOTES:

EXCEPT FOR REINFORCING STEEL IN PILES, USE COATED REINFORCING STEEL CONFORMING TO AASHTO M284 OR M111. USE REINFORCING STEEL CONFORMING TO ASTM A615 GRADE 60, EXCEPT IN COLUMNS. USE COLUMN VERTICAL STEEL AND COLUMN SPIRALS CONFORMING TO ASTM A706 GRADE 60.

USE STRUCTURAL STEEL CONFORMING TO AASHTO AASHTO M270, GRADE 50 EXCEPT WHERE NOTED OTHERWISE.

USE PIPE PILES CONFORMING TO ASTM A252, GRADE 2, Fy = 45 KSI, MINIMUM.

CHAMFER ALL EXPOSED CONCRETE CORNERS 3/4 INCH EXCEPT WHERE NOTED OTHERWISE.

PROVIDE 2 INCH CONCRETE COVER TO REINFORCING STEEL EXCEPT WHERE NOTED OTHERWISE.

USE CLASS 3A(AE) FOR SUPERSTRUCTURE CAST-IN-PLACE CONCRETE AND USE CLASS AA(AE) OR 3A(AE) FOR SUBSTRUCTURE CAST-IN-PLACE CONCRETE AS INDICATED.

ALL DIMENSIONS SHOWN ARE IN FEET AND INCHES UNLESS NOTED OTHERWISE. ALL STATIONS AND ELEVATIONS SHOWN ARE IN FEET.

TC = TANGENT TO CURVE

QUANTITIES

ITEM	QTY.	UNIT	AS CONSTR.
STRUCTURAL STEEL (EST QTY 2,758,800 LB) (SPECIALTY ITEM)	1	LS	
STRUCTURAL CONCRETE 3A(AE) (EST QTY 2,980 CY)	1	LS	
STRUCTURAL CONCRETE AA(AE) (EST QTY 1,260 CY)	1	LS	
REINFORCING STEEL - COATED	1,122,000	LB	
DRIVEN PILES 12.75 INCH	16,100	LIN FT	
POST-TENSIONING FOR PIER	1	LS	
PILE DRIVING EQUIPMENT	1	LS	
ORNAMENTAL IRON FENCE	1,060	LIN FT	
4 FT CHAIN LINK FENCE, TYPE IV VINYL COATED	290	LIN FT	
EXPANSION JOINT (EST QTY 118 LIN FT)	1	LS	
GRANULAR BACKFILL BORROW (PLAN QUANTITY)	399	CY	

RELEASE FOR CONSTRUCTION

NO.	DATE	REMARKS

MURRAY CITY CORPORATION
DEPARTMENT OF PUBLIC SERVICES --- ENGINEERING DIVISION
4646 SO 500 W, MURRAY UT, 84123 - (801) 270-2400

DESIGN KTF 5/03	CHECK DCO 9/03	CHECK DCO 9/03	CHECK DCO 9/03
DRAWN JHM 5/03			
QUANT. KTF 5/03			

APPROVAL RECOMMEND. — DATE — SENIOR DESIGN ENGR.
APPROVED — DATE — DEPT ENGR. OR BRIDGE ENGR.

COTTONWOOD STREET
OVER UTA AND 5300 SOUTH

SITUATION AND LAYOUT 1

PROJECT NUMBER * HPP-STP-2148(11)0

SALT LAKE COUNTY

C-923
DRG. NO.

SHT. 1 OF 54

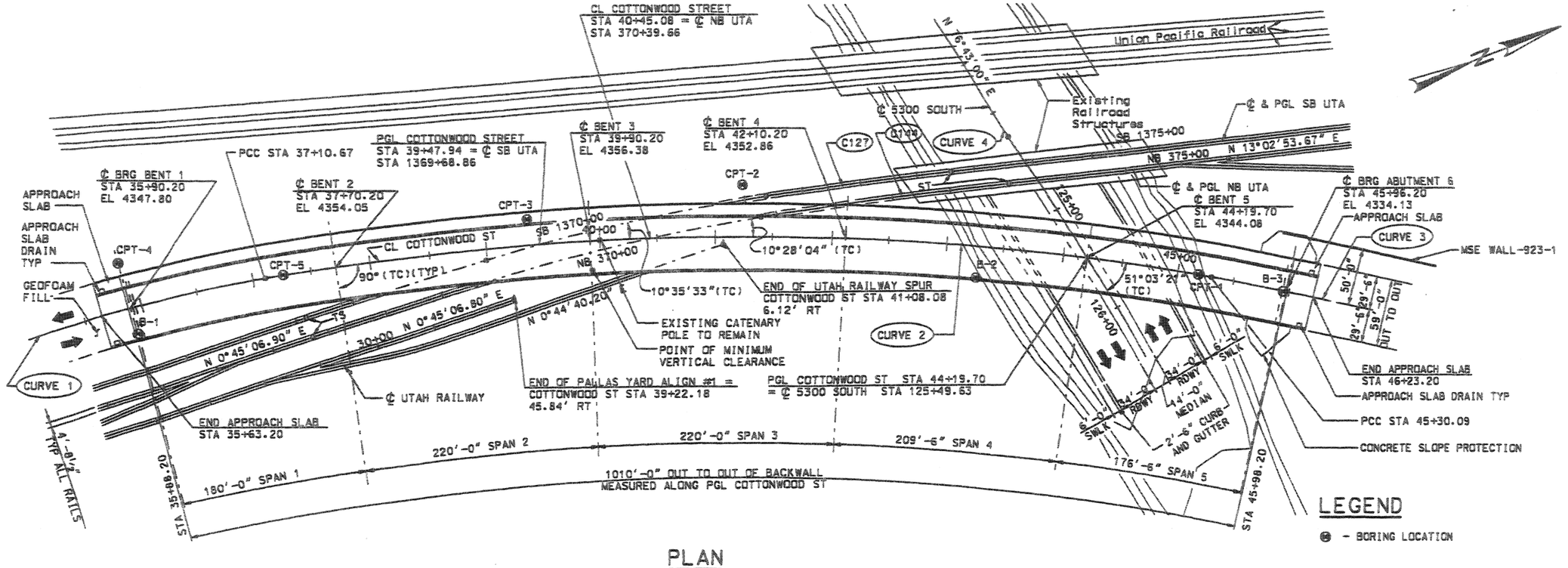

PLAN

NOTE

1. ALL BENTS AND ABUTMENTS ARE RADIAL.

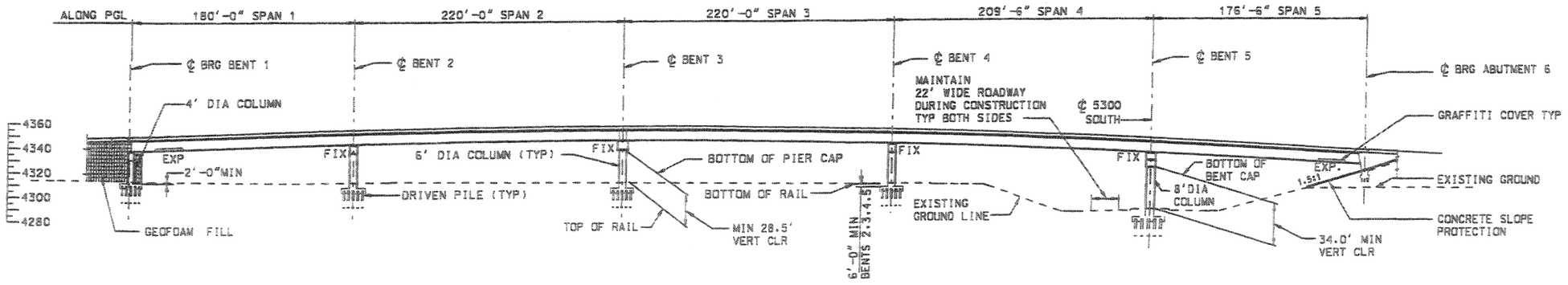

ELEVATION

ELEVATION TAKEN ALONG PGL OF COTTONWOOD STREET

RELEASE FOR CONSTRUCTION

NO.	DATE	REMARKS

MURRAY CITY CORPORATION
DEPARTMENT OF PUBLIC SERVICES — ENGINEERING DIVISION
4646 SO 500 W, MURRAY UT, 84123 - (801) 270-2400

DESIGN	KTF	5/03	CHECK DCO 9/03
DRAWN	JHM	5/03	CHECK DCO 9/03
QUANT.	KTF	5/03	CHECK DCO 9/03

APPROVAL RECOMMD. — SENIOR DESIGN ENGR. — DATE
APPROVED — CITY ENGINEER — DATE

COTTONWOOD STREET
OVER UTA AND 5300 SOUTH

SITUATION AND LAYOUT 2

PROJECT NUMBER * HPP-STP-2148(110)

SALT LAKE COUNTY

C-923
DRG. NO.

SHT. 2 OF 54

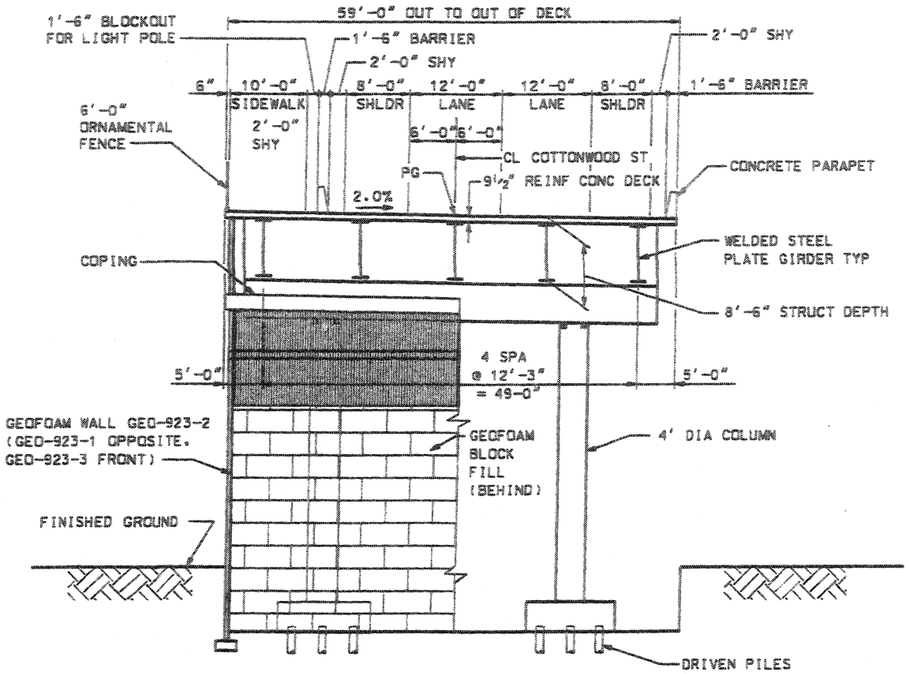

SECTION THRU STRUCTURE AT BENT 1

NOTES

1. SEE SHT 43 & 45 FOR LIMITS OF FENCE.
2. SEE SPECIAL PROVISIONS 00555 FOR UTA CLEARANCE LIMITS.
3. NOTIFY UTA BEFORE SETTING CONSTRUCTION SHORING.

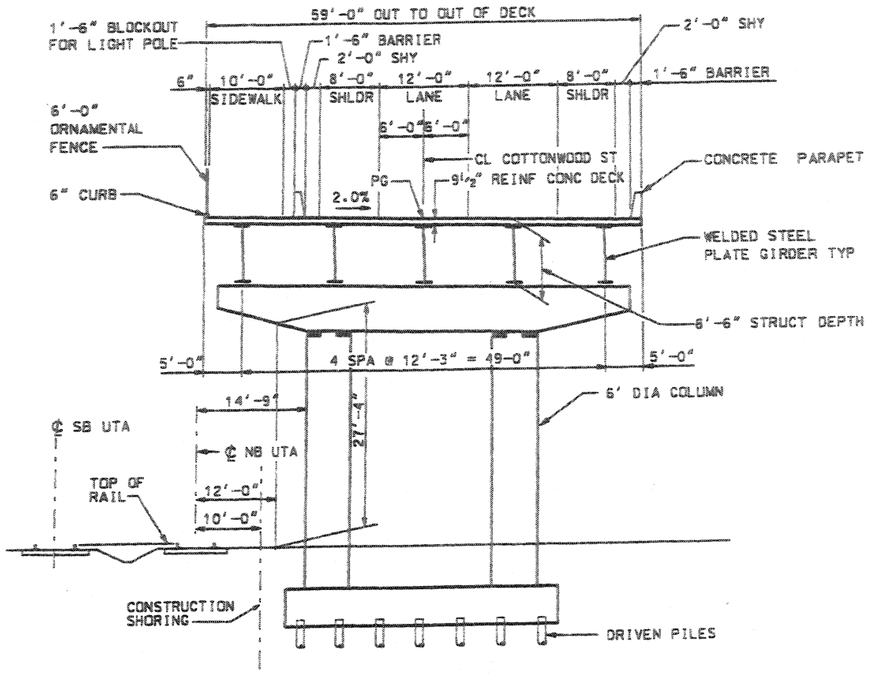

TYPICAL SECTION AT BENT 2 & 4

BENT 4 SHOWN, BENT 2 SIMILAR

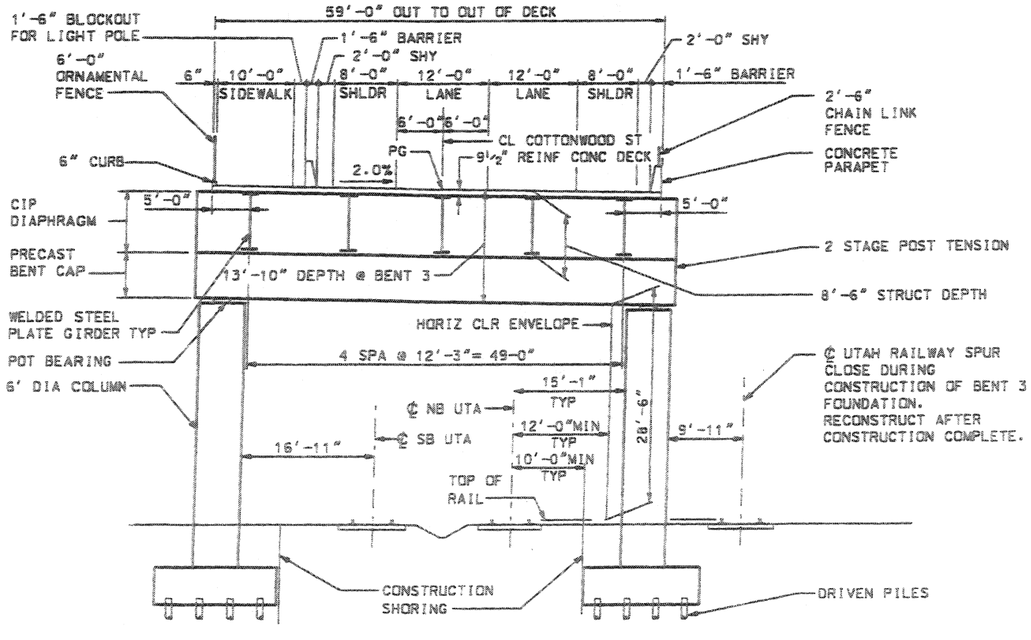

SECTION THRU STRUCTURE AT BENT 3

NORMAL TO PGL COTTONWOOD STREET

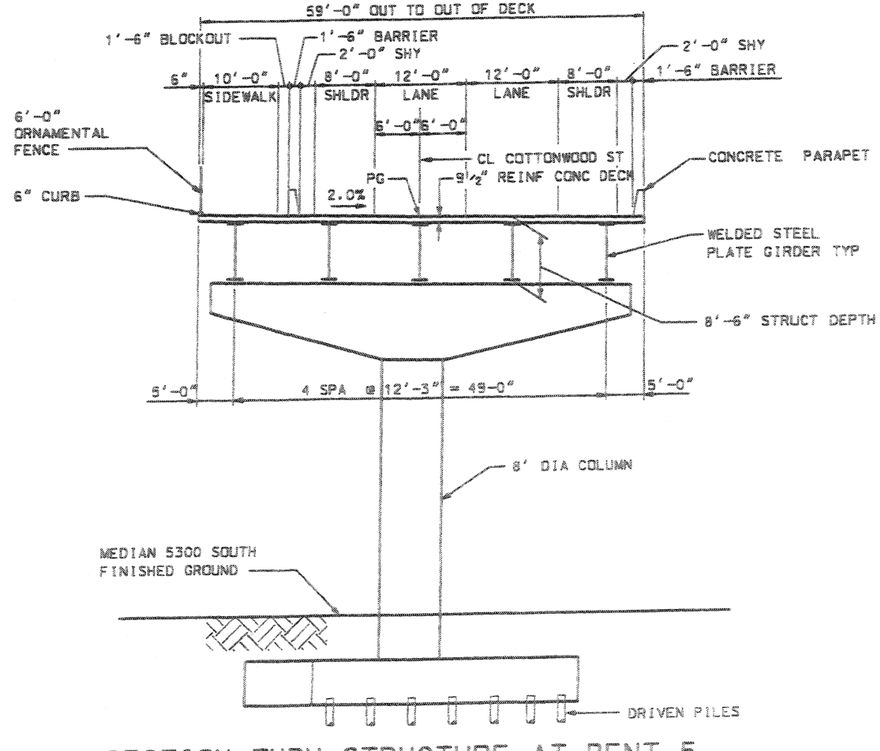

SECTION THRU STRUCTURE AT BENT 5

RELEASE FOR CONSTRUCTION

NO.	DATE	REMARKS

MURRAY CITY CORPORATION
DEPARTMENT OF PUBLIC SERVICES -- ENGINEERING DIVISION
4646 SO 500 W. MURRAY UT. 84123 - (801) 270-2400

DESIGN	KTF	5/03	CHECK DCD 9/03
DRAWN	JHM	5/03	CHECK DCD 9/03
QUANT.	KTF	5/03	CHECK DCD 9/03

APPROVAL RECOMM. — SENIOR DESIGN ENGR. — DATE
APPROVED — UDOT ENGR. DESIGN — DATE

COTTONWOOD STREET
OVER UTA AND 5300 SOUTH
SITUATION AND LAYOUT 3
PROJECT NUMBER * HPP-STP-2148(110)

SALT LAKE COUNTY
C-923
ORG. NO.
SHT. 3 OF 54

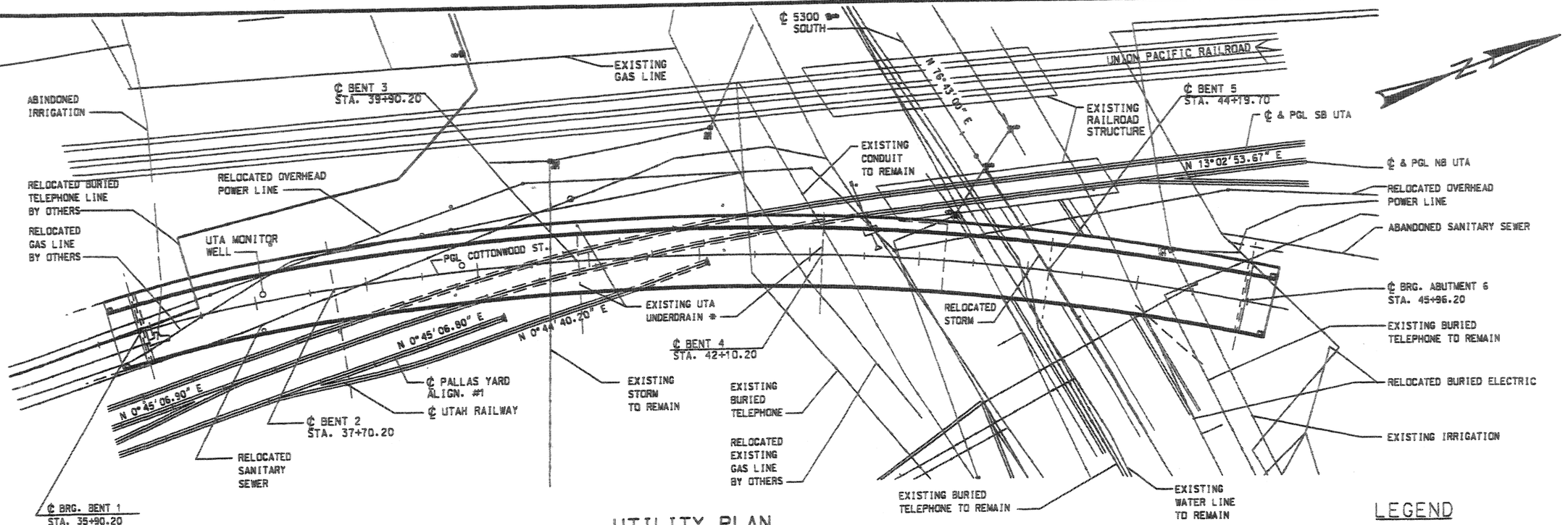

UTILITY PLAN

* TEMPORARY RELOCATED EXISTING UTA UNDERDRAIN USING NON-PERFORATED PIPE FOR FOUNDATION WORKS. RELOCATED UNDERDRAIN TO ORIGINAL LOCATIONS IN KIND WHEN FOUNDATION WORKS ARE COMPLETE.

LEGEND

- SANITARY SEWER
- IRRIGATION PIPE
- BURIED TELEPHONE LINE
- BURIED ELECTRICAL LINE
- OVERHEAD ELECTRIC LINE
- GAS LINE
- WATER LINE
- STORM DRAIN
- DITCH FLOWLINE

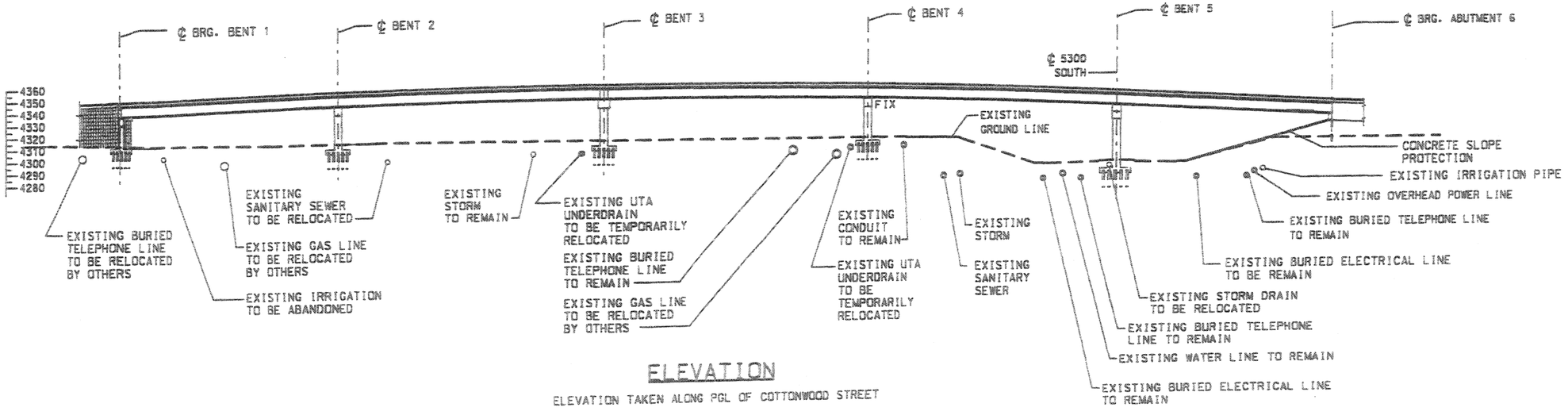

ELEVATION

ELEVATION TAKEN ALONG PGL OF COTTONWOOD STREET

RELEASE FOR CONSTRUCTION

NO.	DATE	REMARKS

MURRAY CITY CORPORATION
DEPARTMENT OF PUBLIC SERVICES — ENGINEERING DIVISION
4646 SO 500 W. MURRAY UT, 84123 - (801) 270-2400

DESIGN KTF 5/03 | CHECK DCO 9/03
DRAWN TAB 5/03 | CHECK DCO 9/03
QUANT. KTF 5/03 | CHECK DCO 9/03

APPROVAL RECOM. — SENIOR DESIGN ENGR. — DATE
APPROVED — UDOT BRIDGE ENGR. — DATE

COTTONWOOD STREET
OVER UTA AND 5300 SOUTH

UTILITY PLAN

PROJECT NUMBER * HPP-STP-2148(11)0

SALT LAKE COUNTY

C-923
DRG. NO.

SHT. 4 OF 54

LOG OF BORING NO. B-1

CLIENT: HW Lochner

SITE: Murray North-South Corridor, Murray, Utah

PROJECT: 5300 South Bridge

Boring Location: Proposed South Approach

Approx. Surface Elev.: 4313 ft

GRAPHIC LOG	DESCRIPTION	DEPTH, ft.	USCS SYMBOL	SAMPLES NUMBER	SAMPLES TYPE	SAMPLES RECOVERY, in.	SAMPLES PENETRATION RESISTANCE BLOWS / ft.	TESTS WATER CONTENT, %	TESTS DRY UNIT WEIGHT, PCF	TESTS LIQUID LIMIT	TESTS PLASTICITY INDEX	TESTS % PASSING NO. 200 SIEVE	OTHER
	0.2 ASPHALTIC CONCRETE PAVEMENT; (2.5-inches)												
	0.8 BASE COURSE; (7-inches)												
	3.5 FILL: sandy clay; medium stiff, brown, with some gravel.												
	SILTY CLAY (A-4); medium stiff to very stiff, light brown, with sand interbeds, iron oxide depoits.		CL ML	1	SS	16	10						
				2	SS	12	8	28	96	27	6		Direct Shear
				3	ST	18							
				4	SS	18	8						
				5	SS	15	6						
				6	SS	15	18						
	26												
	LEAN CLAY (A-7); soft to medium stiff, gray to dark gray, with silt and sand interbeds.			7	ST	24		48	73				Direct Shear Consolidation
				8	SS	18	5						
				9	SS	18	8						

Continued Next Page

The stratification lines represent the approximate boundary lines between soil and rock types: in-situ, the transition may be gradual.

WATER LEVEL OBSERVATIONS, ft			
WL	▼ 58	WD 6/27/02	▼
WL	▼		
WL			

BORING STARTED			6-26-02
BORING COMPLETED			6-27-02
RIG Diedrich 120		FOREMAN	MDF
	RLC	JOB #	61995099

GEO LOG 61995099.GPJ TERRACON.GDT 10/21/03

LOG OF BORING NO. B-1

CLIENT: HW Lochner

SITE: Murray North-South Corridor, Murray, Utah

PROJECT: 5300 South Bridge

GRAPHIC LOG	DESCRIPTION	DEPTH, ft.	USCS SYMBOL	SAMPLES NUMBER	SAMPLES TYPE	SAMPLES RECOVERY, in.	SAMPLES PENETRATION RESISTANCE BLOWS / ft.	TESTS WATER CONTENT, %	TESTS DRY UNIT WEIGHT, PCF	TESTS LIQUID LIMIT	TESTS PLASTICITY INDEX	TESTS % PASSING NO. 200 SIEVE	OTHER
	LEAN CLAY (A-7); soft to medium stiff, gray to dark gray, with silt and sand interbeds.		CL	10	SS	18	2	45		47	25		
	47												
	SAND; dense to very dense, gray, with silt, fine to medium-grained.			11	ST	24							
				12	SS	18	56						
			SP SM	13	SS	18	44	24				6	
	53												
	LEAN CLAY (A-6); medium stiff to hard, gray to dark gray, with trace sand, silt and sand interbeds.			14	SS	18	7						
			CL	15	SS	18	25	31		36	16		
				16	SS	13	31						
	67												
	SILTY SAND; medium dense to very dense, gray, with some silt, fine to coarse-grained, with silt and clay interbeds.		SM	17	SS	13	86	14				26	
				18	SS	14	28						
	78												

Continued Next Page

The stratification lines represent the approximate boundary lines between soil and rock types: in-situ, the transition may be gradual.

WATER LEVEL OBSERVATIONS, ft			
WL	▼ 58	WD 6/27/02	▼
WL	▼		
WL			

BORING STARTED			6-26-02
BORING COMPLETED			6-27-02
RIG Diedrich 120		FOREMAN	MDF
	RLC	JOB #	61995099

GEO LOG 61995099.GPJ TERRACON.GDT 10/21/03

RELEASE FOR CONSTRUCTION

REMARKS

NO. DATE

MURRAY CITY CORPORATION
DEPARTMENT OF PUBLIC SERVICES — ENGINEERING DIVISION
4646 SO 500 W, MURRAY UT. 84123 - (801) 270-2400

DESIGN RLC 11/03 | CHECK WJA 11/03
DRAWN RLC 11/03 | CHECK WJA 11/03
QUANT. | CHECK

APPROVAL RECOMM. DATE — GEOTECHNICAL ENGR.
APPROVED DATE — DEPUTY BRIDGE ENGR.

COTTONWOOD STREET
OVER UTA AND 5300 SOUTH
SOIL DATA B-1
PROJECT NUMBER * HPP-STP-2148(11)0

SALT LAKE COUNTY

C-923 DRG. NO.

SHT. 5 OF 54

LOG OF BORING NO. B-1

CLIENT: HW Lochner

SITE: Murray North-South Corridor, Murray, Utah

PROJECT: 5300 South Bridge

GRAPHIC LOG	DESCRIPTION	DEPTH, ft.	USCS SYMBOL	SAMPLES NUMBER	SAMPLES TYPE	SAMPLES RECOVERY, in.	SAMPLES PENETRATION RESISTANCE BLOWS / ft.	TESTS WATER CONTENT, %	TESTS DRY UNIT WEIGHT, PCF	TESTS LIQUID LIMIT	TESTS PLASTICITY INDEX	TESTS % PASSING NO. 200 SIEVE	OTHER
	LEAN CLAY (A-7): medium stiff to very stiff, gray to dark gray, with silt and sand interbeds.	81		19	SS	18	5						
		86		20	ST	24							Direct Shear Consolidatio
		88	CL	21	SS	18	16	28	97	44	22		
	95												
	SAND: dense to very dense, gray, with silt.	96		22	SS	18	60						
		101	SP SM	23	SS	14	38	12				10	
	106	106		24	SS	13	47						
	SILTY SAND: medium dense to dense, brown to gray, with clay layers.	111		25	SS	18	18	25					
	117	116		26	SS	18	48						
	Bottom of boring at 117.0 feet. Groundwater encountered at approx. 58 feet while drilling.	117											

The stratification lines represent the approximate boundary lines between soil and rock types: in-situ, the transition may be gradual.

WATER LEVEL OBSERVATIONS, ft		
WL	= 58 WD 6/27/02	=
WL	=	
WL		

BORING STARTED	6-26-02
BORING COMPLETED	6-27-02
RIG Diedrich 120	FOREMAN MDF
RLC	JOB # 61995099

SOIL LOG 61995099.GPJ TERRACON.GDT 10/21/03

UNIFIED SOIL CLASSIFICATION SYSTEM

Criteria for Assigning Group Symbols and Group Names Using Laboratory Tests[A]				Soil Classification: Group Symbol	Soil Classification: Group Name[B]
Coarse Grained Soils: More than 50% retained on No. 200 sieve	Gravels: More than 50% of coarse fraction retained on No. 4 sieve	Clean Gravels: Less than 5% fines[C]	$C_u \geq 4$ and $1 \leq C_c \leq 3$[E]	GW	Well-graded gravel[F]
			$C_u < 4$ and/or $1 > C_c > 3$[E]	GP	Poorly graded gravel[F]
		Gravels with Fines: More than 12% fines[C]	Fines classify as ML or MH	GM	Silty gravel[F,G,H]
			Fines classify as CL or CH	GC	Clayey gravel[F,G,I]
	Sands: 50% or more of coarse fraction passes No. 4 sieve	Clean Sands: Less than 5% fines[D]	$C_u \geq 6$ and $1 \leq C_c \leq 3$[E]	SW	Well-graded sand[I]
			$C_u < 6$ and/or $1 > C_c > 3$[E]	SP	Poorly graded sand[I]
		Sands with Fines: More than 12% fines[D]	Fines classify as ML or MH	SM	Silty sand[G,H,I]
			Fines Classify as CL or CH	SC	Clayey sand[G,H,I]
Fine-Grained Soils: 50% or more passes the No. 200 sieve	Silts and Clays: Liquid limit less than 50	Inorganic:	PI > 7 and plots on or above "A" line[J]	CL	Lean clay[K,L,M]
			PI < 4 or plots below "A" line[J]	ML	Silt[K,L,M]
		Organic:	Liquid limit - oven dried / Liquid limit - not dried < 0.75	OL	Organic clay[K,L,M,N] / Organic silt[K,L,M,O]
	Silts and Clays: Liquid limit 50 or more	Inorganic:	PI plots on or above "A" line	CH	Fat clay[K,L,M]
			PI plots below "A" line	MH	Elastic Silt[K,L,M]
		Organic:	Liquid limit - oven dried / Liquid limit - not dried < 0.75	OH	Organic clay[K,L,M,P] / Organic silt[K,L,M,Q]
Highly organic soils	Primarily organic matter, dark in color, and organic odor			PT	Peat

[A] Based on the material passing the 3-in. (75-mm) sieve.

[B] If field sample contained cobbles or boulders, or both, add "with cobbles or boulders, or both" to group name.

[C] Gravels with 5 to 12% fines require dual symbols: GW-GM well-graded gravel with silt, GW-GC well-graded gravel with clay, GP-GM poorly graded gravel with silt, GP-GC poorly graded gravel with clay.

[D] Sands with 5 to 12% fines require dual symbols: SW-SM well-graded sand with silt, SW-SC well-graded sand with clay, SP-SM poorly graded sand with silt, SP-SC poorly graded sand with clay.

[E] $C_u = D_{60}/D_{10}$ $C_c = \frac{(D_{30})^2}{D_{60} \times D_{10}}$

[F] If soil contains ≥ 15% sand, add "with sand" to group name.

[G] If fines classify as CL-ML, use dual symbol GC-GM, or SC-SM.

[H] If fines are organic, add "with organic fines" to group name.

[I] If soil contains ≥ 15% gravel, add "with gravel" to group name.

[J] If Atterberg limits plot in shaded area, soil is a CL-ML, silty clay.

[K] If soil contains 15 to 29% plus No. 200, add "with sand" or "with gravel," whichever is predominant.

[L] If soil contains ≥ 30% plus No. 200 predominantly sand, add "sandy" to group name.

[M] If soil contains ≥ 30% plus No. 200, predominantly gravel, add "gravelly" to group name.

[N] PI ≥ 4 and plots on or above "A" line.

[O] PI < 4 or plots below "A" line.

[P] PI plots on or above "A" line.

[Q] PI plots below "A" line.

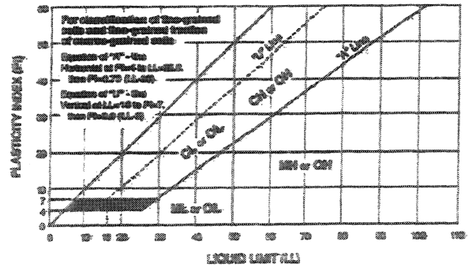

Terracon

Form 111—6/98

RELEASE FOR CONSTRUCTION

NO.	DATE	REMARKS

MURRAY CITY CORPORATION
DEPARTMENT OF PUBLIC SERVICES — ENGINEERING DIVISION
4646 SO 500 W. MURRAY UT. 84123 — (801) 270-2400

DESIGN RLC 11/03 | DRAWN RLC 11/03 | CHECK WJA 11/03 | CHECK WJA 11/03 | CHECK

APPROVAL RECOM. DATE GEOTECHNICAL ENGR.

APPROVED DATE CITY ENGINEER

CLIENT

COTTONWOOD STREET
OVER UTA AND 5300 SOUTH
SOIL DATA B-1

PROJECT NUMBER * HPP-STP-2148(1)0

SALT LAKE COUNTY

C-923 DRG. NO.

SHT. 5A OF 54

LOG OF BORING NO. B-2

CLIENT: HW Lochner

SITE: Murray North-South Corridor, Murray, Utah

PROJECT: 5300 South Bridge

Boring Location: South Side 5300 South Street

Approx. Surface Elev.: 4311 ft

GRAPHIC LOG	DESCRIPTION	DEPTH, ft.	USCS SYMBOL	SAMPLES NUMBER	SAMPLES TYPE	SAMPLES RECOVERY, in.	SAMPLES PENETRATION RESISTANCE BLOWS / ft.	TESTS WATER CONTENT, %	TESTS DRY UNIT WEIGHT, PCF	TESTS LIQUID LIMIT	TESTS PLASTICITY INDEX	TESTS % PASSING NO. 200 SIEVE	OTHER
	FILL: clay; medium stiff, brown to dark brown, with sand.												
7				1	SS	8	6						
	SAND: loose to medium dense, light brown to brown, fine- to medium-grained, with some silt and clay interbeds, iron oxide deposits.			2	SS	8	6						
9.5				3	SS	12	10						
	LEAN CLAY (A-6): stiff, light brown to brown, with silt and sand interbeds, iron oxide deposits.			4	SS	14	8						
	—— with occasional gravel below 17 feet.		CL	5	ST	12		24		28	10		
				6	SS	18	12						
22			CL	7	ST	24		17	121	34	14		Direct Shear
	LEAN CLAY: soft to stiff, gray to dark gray, with silt and sand interbeds.			8	SS	24	11						
				9	SS	16	2						
				10	ST	24		22	111				Direct Shear Consolidation
				11	SS	18	12						

Continued Next Page

The stratification lines represent the approximate boundary lines between soil and rock types: in-situ, the transition may be gradual.

WATER LEVEL OBSERVATIONS, ft			
WL	▼ 15	WD 6/28/02	▼
WL	▼		
WL			

BORING STARTED			6-27-02
BORING COMPLETED			6-28-02
RIG Diedrich 120		FOREMAN	MDF
	RLC	JOB #	61995099

GEO LOG 61995099.GPJ TERRACON.GDT 10/21/03

LOG OF BORING NO. B-2

CLIENT: HW Lochner

SITE: Murray North-South Corridor, Murray, Utah

PROJECT: 5300 South Bridge

GRAPHIC LOG	DESCRIPTION	DEPTH, ft.	USCS SYMBOL	SAMPLES NUMBER	SAMPLES TYPE	SAMPLES RECOVERY, in.	SAMPLES PENETRATION RESISTANCE BLOWS / ft.	TESTS WATER CONTENT, %	TESTS DRY UNIT WEIGHT, PCF	TESTS LIQUID LIMIT	TESTS PLASTICITY INDEX	TESTS % PASSING NO. 200 SIEVE	OTHER
	LEAN CLAY: soft to stiff, gray to dark gray, with silt and sand interbeds.			12	SS	18	2						
48				13	SS	18	5						
	SILTY SAND: medium dense to very dense, gray, fine- to medium-grained.			14	ST	24							
			SM	15	SS	24	41	22				20	
				16	SS	15	20						
	—— fine- to coarse-grained with thin clay interbeds below 65 feet.		SM	17	SS	12	82	15				27	
	—— trace gravel below 70 feet.			18	SS	12	68						
			SM	19	SS	12	60	20				21	

Continued Next Page

The stratification lines represent the approximate boundary lines between soil and rock types: in-situ, the transition may be gradual.

WATER LEVEL OBSERVATIONS, ft			
WL	▼ 15	WD 6/28/02	▼
WL	▼		
WL			

BORING STARTED			6-27-02
BORING COMPLETED			6-28-02
RIG Diedrich 120		FOREMAN	MDF
	RLC	JOB #	61995099

GEO LOG 61995099.GPJ TERRACON.GDT 10/21/03

RELEASE FOR CONSTRUCTION

NO.	DATE	REMARKS

MURRAY CITY CORPORATION
DEPARTMENT OF PUBLIC SERVICES — ENGINEERING DIVISION
4646 SO 500 W, MURRAY UT. 84123 — (801) 270-2400

DESIGN RLC 11/03 CHECK WJA 11/03
DRAWN RLC 11/03 CHECK WJA 11/03
CHKD. CHECK

APPROVAL RECOMM. GEOTECHNICAL ENGR. DATE
APPROVED DEPT. BRIDGE ENGR. DATE

COTTONWOOD STREET
OVER UTA AND 5300 SOUTH
SOIL DATA B-2
PROJECT NUMBER * HPP-STP-2148(110)

SALT LAKE COUNTY
C-923 DRG. NO.
SHT. 58 OF 84

LOG OF BORING NO. B-2

CLIENT: HW Lochner

SITE: Murray North-South Corridor, Murray, Utah

PROJECT: 5300 South Bridge

GRAPHIC LOG	DESCRIPTION	DEPTH, ft.	USCS SYMBOL	SAMPLES NUMBER	SAMPLES TYPE	SAMPLES RECOVERY, in.	SAMPLES PENETRATION RESISTANCE BLOWS / ft.	TESTS WATER CONTENT, %	TESTS DRY UNIT WEIGHT, PCF	TESTS LIQUID LIMIT	TESTS PLASTICITY INDEX	TESTS % PASSING NO. 200 SIEVE	OTHER
	SILTY SAND: medium dense to very dense, gray, fine- to medium-grained.	81		20	SS	12	29						
		86		21	SS	12	58						
88													
	LEAN CLAY (A-6): very stiff to hard, gray to dark gray, with sand interbeds.	91	CL	22	SS	12	38	27		31	13		
		96		23	SS	12	27						
102		101		24	SS	12	15						
	Bottom of boring at 102.0 feet. Groundwater encountered at approx. 15 feet while drilling.	102											

The stratification lines represent the approximate boundary lines between soil and rock types: in-situ, the transition may be gradual.

WATER LEVEL OBSERVATIONS, ft			
WL	▫ 15 WD 6/28/02	▫	
WL	▫		
WL			

BORING STARTED		6-27-02
BORING COMPLETED		6-28-02
RIG Diedrich 120	FOREMAN	MDF
RLC	JOB #	61995099

GEOLOG 61995099.GPJ TERRAGLOBT 10/21/03

AASHTO Classification of Soils and Soil-Aggregate Mixtures

General Classification	Granular Materials (35 Percent or Less Passing 0.075 mm)							Silt-Clay Materials (More than 35 Percent Passing 0.075 mm)			
Group Classification	A-1			A-2				A-4	A-5	A-6	A-7
	A-1-a	A-1-b	A-3	A-2-4	A-2-5	A-2-6	A-2-7				A-7-5, A-7-6
Sieve analysis, percent passing:											
2.00 mm (No. 10)	50 max	—	—	—	—	—	—	—	—	—	—
0.425 mm (No. 40)	30 max	50 max	51 min	—	—	—	—	—	—	—	—
0.075 mm (No. 200)	15 max	25 max	10 max	35 max	35 max	35 max	35 max	36 min	36 min	36 min	36 min
Characteristics of fraction passing 0.425 mm (No. 40):											
Liquid limit*	—	—	—	40 max	41 min	40 max	41 min	40 max	41 min	40 max	41 min
Plasticity index	6 max		N.P.	10 max	10 max	11 min	11 min	10 max	10 max	11 min	11 min*
Usual types of significant constituent materials	Stone fragments, gravel and sand		Fine sand	Silty or clayey gravel and sand				Silty soils		Clayey soils	
General ratings as subgrade	Excellent to good							Fair to poor			

*Plasticity index of A-7-5 subgroup is equal to or less than LL minus 30. Plasticity index of A-7-6 subgroup is greater than LL minus 30

RELEASE FOR CONSTRUCTION

NO.	DATE	REMARKS

MURRAY CITY CORPORATION
DEPARTMENT OF PUBLIC SERVICES — ENGINEERING DIVISION
4646 SO 500 W. MURRAY UT. 84123 - (801) 270-2400

DESIGN ____ CHECK ____
DRAWN ____ CHECK ____
QUANT. ____ CHECK ____

APPROVAL RECOM. ____ DATE ____ GEOTECHNICAL ENGR.
APPROVED ____ DATE ____ HEAD BRIDGE ENGR.

COTTONWOOD STREET
OVER UTA AND 5300 SOUTH

SOIL DATA B-2

PROJECT NUMBER * HPP-STP-2148(1)0

SALT LAKE COUNTY

C-923 DRG. NO.

SHT. 50 OF 54

LOG OF BORING NO. B-3

CLIENT: HW Lochner

SITE: Murray North-South Corridor, Murray, Utah

PROJECT: 5300 South Bridge

Boring Location: Proposed North Approach

Approx. Surface Elev.: 4310 ft

GRAPHIC LOG	DESCRIPTION	DEPTH, ft.	USCS SYMBOL	SAMPLES NUMBER	SAMPLES TYPE	SAMPLES RECOVERY, in.	SAMPLES PENETRATION RESISTANCE BLOWS / ft.	TESTS WATER CONTENT, %	TESTS DRY UNIT WEIGHT, PCF	TESTS LIQUID LIMIT	TESTS PLASTICITY INDEX	TESTS % PASSING NO. 200 SIEVE	OTHER
	FILL: silty sand; loose, brown, with gravel.	1-5											
6		6		1	SS	8	8						
	SILTY SAND: loose to medium dense, light brown to brown, with silt and clay layers, iron oxide deposits, occasional organics.	7-10											
		11		2	SS	6	18	20				64	
		12-15											
		16		3	SS	5	13						
23		17-20											
		21		4	SS	6	13						
	LEAN CLAY (A-4 - A-6): stiff, gray to dark gray, with trace sand, sand layers.	22-25											
		26		5	SS	3	13						
		27-30											
		31	CL	6	SS	3	15	19		24	6		
		32	LML										
		33-35											
		36		7	SS	23	8						
		37-40											

Continued Next Page

The stratification lines represent the approximate boundary lines between soil and rock types: in-situ, the transition may be gradual.

WATER LEVEL OBSERVATIONS, ft		
WL	▼ 15.5 WD 7/1/02	▼
WL	▼	
WL		

BORING STARTED			6-28-02
BORING COMPLETED			7-2-02
RIG Diedrich 120	FOREMAN		MDF
	RLC	JOB #	61995099

GEO LOG 61995099.GPJ TERRACON.GDT 10/21/03

LOG OF BORING NO. B-3

CLIENT: HW Lochner

SITE: Murray North-South Corridor, Murray, Utah

PROJECT: 5300 South Bridge

GRAPHIC LOG	DESCRIPTION	DEPTH, ft.	USCS SYMBOL	SAMPLES NUMBER	SAMPLES TYPE	SAMPLES RECOVERY, in.	SAMPLES PENETRATION RESISTANCE BLOWS / ft.	TESTS WATER CONTENT, %	TESTS DRY UNIT WEIGHT, PCF	TESTS LIQUID LIMIT	TESTS PLASTICITY INDEX	TESTS % PASSING NO. 200 SIEVE	OTHER
	LEAN CLAY (A-4 - A-6): stiff, gray to dark gray, with trace sand, sand layers.	41	CL	8	SS	3		40		32	14		
		42-50											
		51	CL	9	SS	4	8	59		42	23		
63		52-60											
		61		10	SS	1							
	SILTY SAND: medium dense to very dense, gray, fine- to coarse-grained, with silt and clay layers.	62-66											
		67	SM	11	SS	4	15	42				43	
		68-70											
		71		12	SS	8	34						
		72-75											
		76	SM	13	SS	13	58	14				15	
		77-80											

Continued Next Page

The stratification lines represent the approximate boundary lines between soil and rock types: in-situ, the transition may be gradual.

WATER LEVEL OBSERVATIONS, ft		
WL	▼ 15.5 WD 7/1/02	▼
WL	▼	
WL		

BORING STARTED			6-28-02
BORING COMPLETED			7-2-02
RIG Diedrich 120	FOREMAN		MDF
	RLC	JOB #	61995099

GEO LOG 61995099.GPJ TERRACON.GDT 10/21/03

RELEASE FOR CONSTRUCTION

REMARKS

NO. DATE

MURRAY CITY CORPORATION
DEPARTMENT OF PUBLIC SERVICES — ENGINEERING DIVISION
4646 SO 500 W. MURRAY UT. 84123 - (801) 270-2400

DESIGN RLC 11/03 CHECK WJA 11/03
DRAWN RLC 11/03 CHECK WJA 11/03
QUANT. CHECK

APPROVAL RECOMMD. GEOTECHNICAL ENGR. DATE
APPROVED MUNICIPAL ENGR. DATE

COTTONWOOD STREET
OVER UTA AND 5300 SOUTH
SOIL DATA B-3
PROJECT NUMBER * HPP-STP-2148(1)0

SALT LAKE COUNTY

C-923 DRG. NO.

SHT. 50 OF 54

LOG OF BORING NO. B-3

CLIENT: HW Lochner

SITE: Murray North-South Corridor, Murray, Utah

PROJECT: 5300 South Bridge

GRAPHIC LOG	DESCRIPTION	DEPTH, ft.	USCS SYMBOL	SAMPLES NUMBER	SAMPLES TYPE	SAMPLES RECOVERY, in.	SAMPLES PENETRATION RESISTANCE BLOWS / ft.	TESTS WATER CONTENT, %	TESTS DRY UNIT WEIGHT, PCF	TESTS LIQUID LIMIT	TESTS PLASTICITY INDEX	TESTS % PASSING NO. 200 SIEVE	OTHER
	SILTY SAND: medium dense to very dense, gray, fine- to coarse-grained, with silt and clay layers.	81		14	SS	15	31						
		82											
		83											
		84											
	85	85											
	LEAN CLAY (A-6): very stiff, gray, with silty sand interbeds.	86		15	SS	15	43	22				53	
		87											
		88											
		89											
		90											
		91	CL	16	SS	18	19	30		37	18		
		92											
		93											
		94											
		95											
		96		17	ST	24							
		97											
		98		18	SS	18	24						
	99	99											
	Bottom of boring at 99.0 feet. Groundwater encountered at approx. 15.5 feet while drilling.												

The stratification lines represent the approximate boundary lines between soil and rock types: in-situ, the transition may be gradual.

WATER LEVEL OBSERVATIONS, ft			
WL	= 15.5	WD 7/1/02	=
WL	=		
WL			

BORING STARTED	6-28-02
BORING COMPLETED	7-2-02
RIG Diedrich 120	FOREMAN MDF
RLC	JOB # 61995099

GEO LOG 61995099.GPJ TERRACON.GDT 10/21/03

RELEASE FOR CONSTRUCTION

REMARKS

NO. DATE

MURRAY CITY CORPORATION
DEPARTMENT OF PUBLIC SERVICES — ENGINEERING DIVISION
4646 SO 500 W. MURRAY UT. 84123 - (801) 270-2400

DESIGN RLC 11/03 CHECK WJA 11/03
DRAWN RLC 11/03 CHECK WJA 11/03
QUANT. CHECK

APPROVAL RECOMM. DATE GEOTECHNICAL ENGR.
APPROVED DATE UDOT BRIDGE ENGR.

COTTONWOOD STREET
OVER UTA AND 5300 SOUTH
SOIL DATA B-3
PROJECT NUMBER * HPP-STP-2148(1)0

SALT LAKE COUNTY

C-923 ORG. NO.

SHT. 56 OF 54

CONETEC

Terracon

APROX. SURFACE ELEV.: 4291
Hole No.: CPT-1
Location: 5300 SOUTH

Cone: 20 TON A 122
Date: 09:11:02 18:18

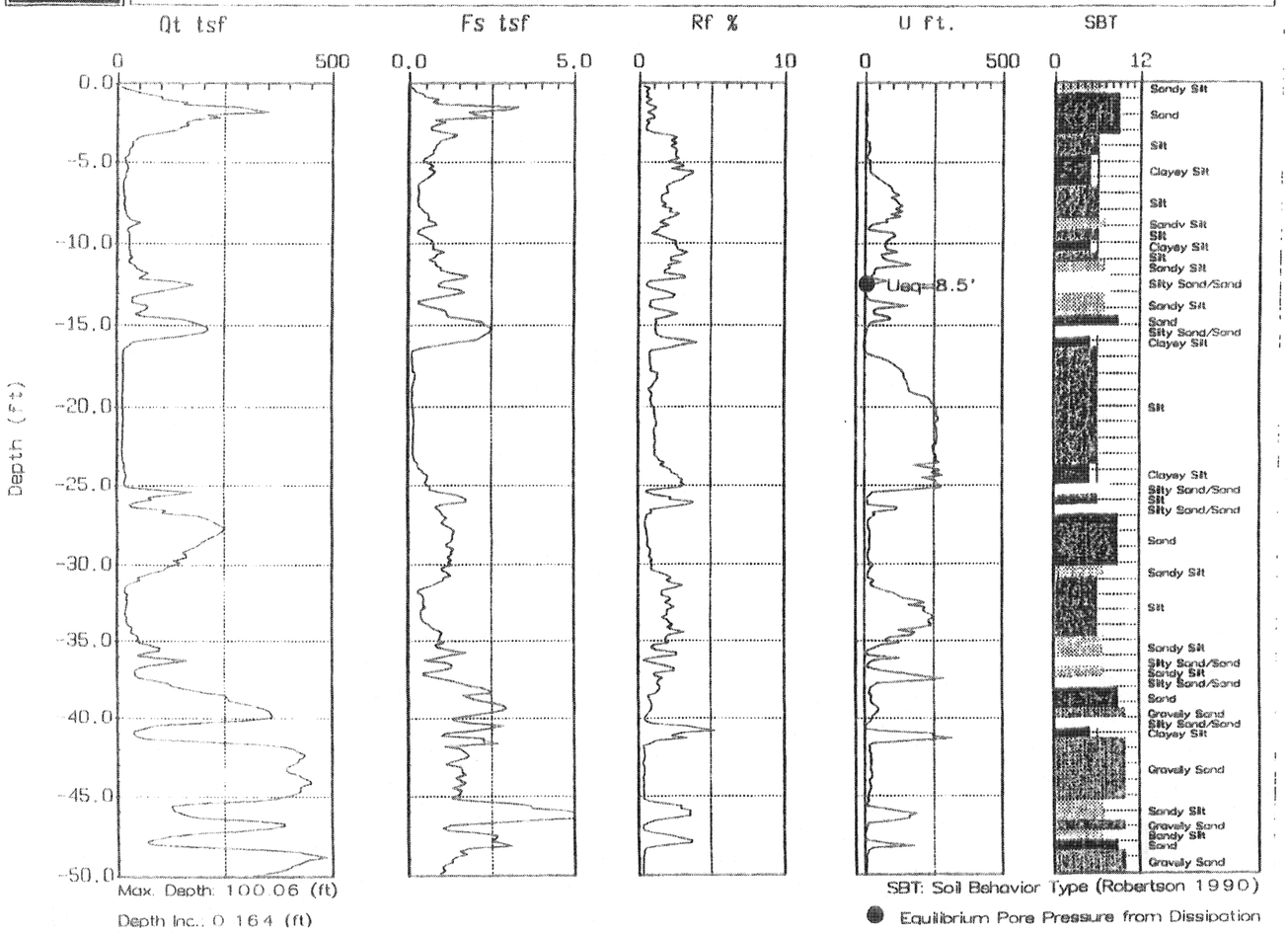

Max. Depth: 100.06 (ft)
Depth Inc.: 0.164 (ft)

SBT: Soil Behavior Type (Robertson 1990)

● Equilibrium Pore Pressure from Dissipation

CONETEC

Terracon

Hole No.: CPT-1
Location: 5300 SOUTH

Cone: 20 TON A 122
Date: 09:11:02 18:18

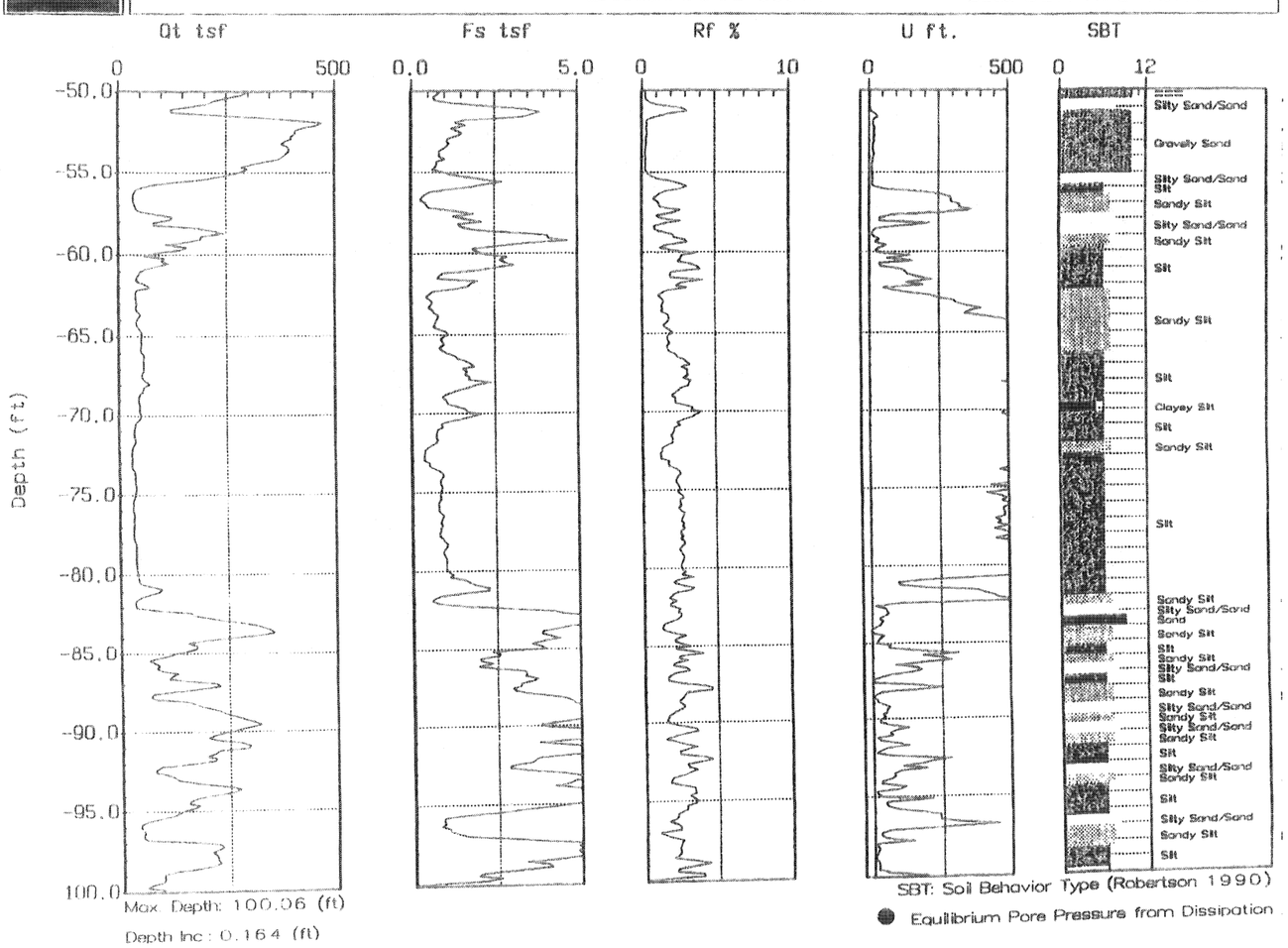

Max. Depth: 100.06 (ft)
Depth Inc.: 0.164 (ft)

SBT: Soil Behavior Type (Robertson 1990)

● Equilibrium Pore Pressure from Dissipation

SALT LAKE COUNTY	COTTONWOOD STREET OVER UTA AND 5300 SOUTH	MURRAY CITY CORPORATION DEPARTMENT OF PUBLIC SERVICES -- ENGINEERING DIVISION 4646 SO 500 W. MURRAY UT. 84123 - (801) 270-2400	NO.	DATE	RELEASE FOR CONSTRUCTION
C-923 PROJ. NO.	SOIL DATA CPT-1	APPROVAL RECOMM. DATE GEOTECHNICAL ENGR.			REMARKS
PROJECT NUMBER * HPP-STP-2148(1)0		APPROVED DATE UDOT BRIDGE ENGR.	DESIGN RLC 11/03	CHECK WJA 11/03	
			DRAWN RLC 11/03	CHECK WJA 11/03	
			QUANT.	CHECK	

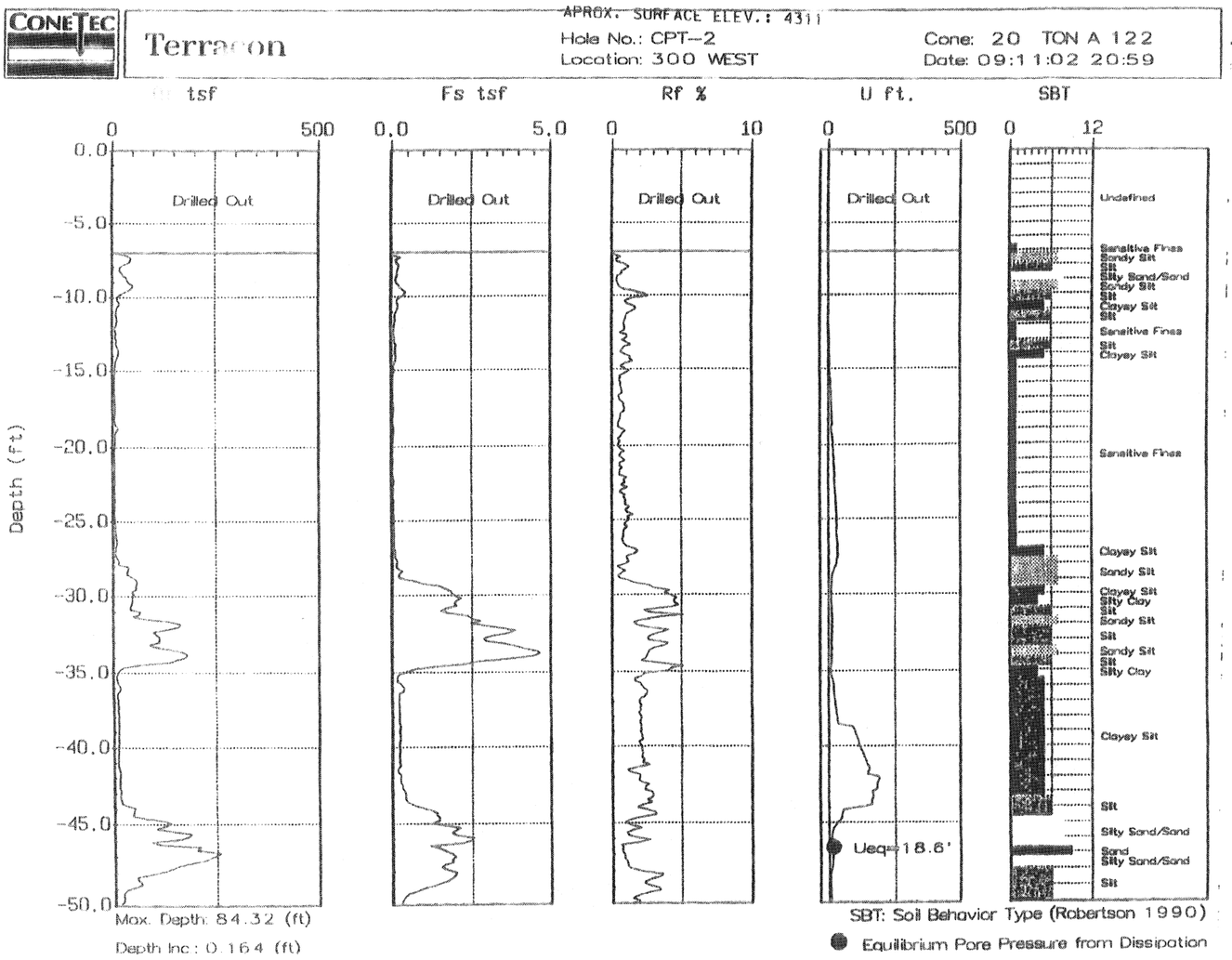

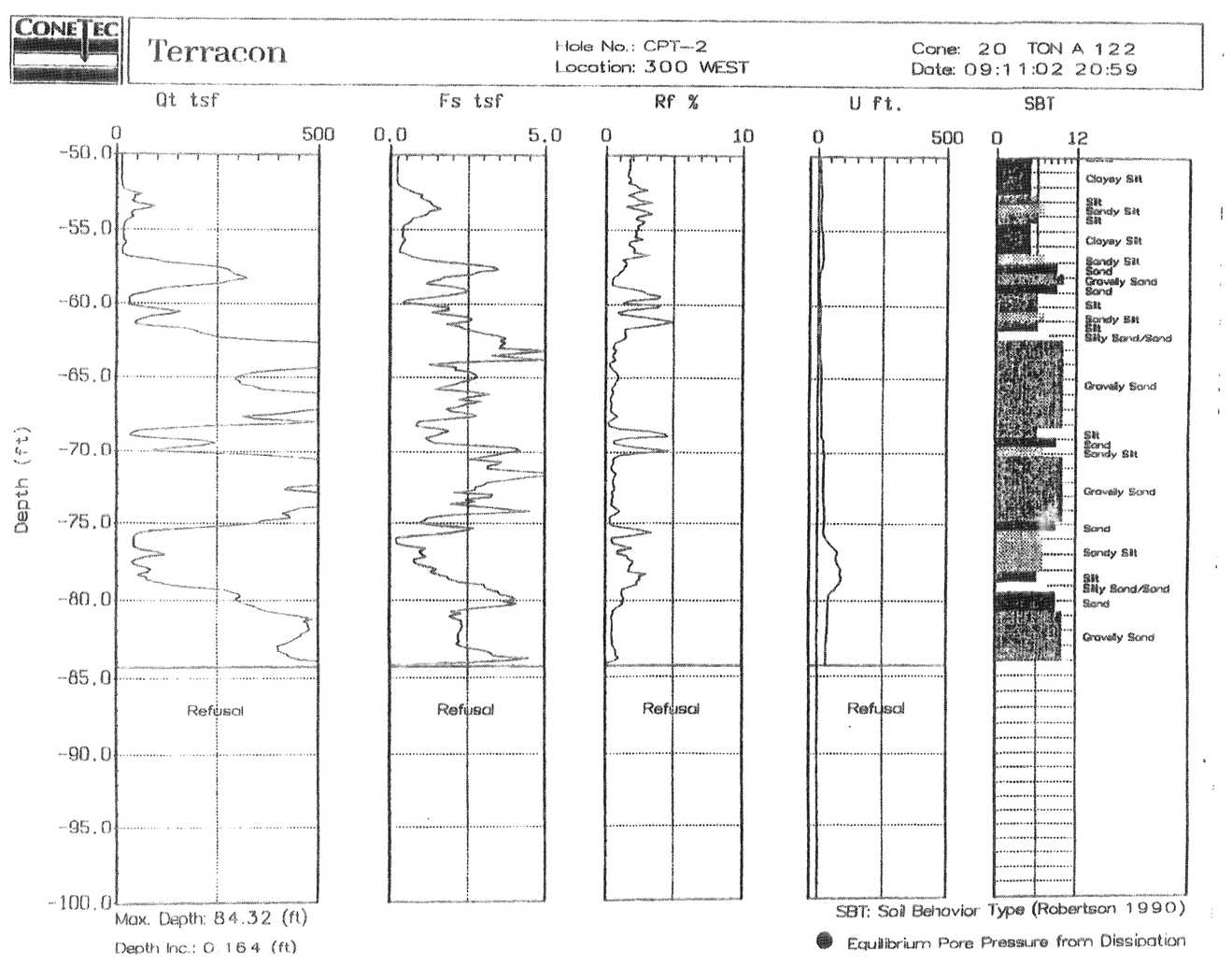

COTTONWOOD STREET OVER UTA AND 5300 SOUTH	MURRAY CITY CORPORATION DEPARTMENT OF PUBLIC SERVICES -- ENGINEERING DIVISION 4646 SO 500 W. MURRAY UT. 84123 - (801) 270-2400			RELEASE FOR CONSTRUCTION
SOIL DATA CPT-2	APPROVAL RECOMM. DATE GEOTECHNICAL ENGR.	DESIGN RLC 11/03	CHECK WJA 11/03	NO. DATE REMARKS
PROJECT NUMBER * HPP-STP-2148(1)0	APPROVED. DATE UDOT BRIDGE ENGR.	DRAWN RLC 11/03	CHECK WJA 11/03	
SALT LAKE COUNTY		QUANT.	CHECK	
C-1923 PROJ. NO.				
SHEET 50 OF 54				

CONETEC

Terracon

APROX. SURFACE ELEV.: 4311
Hole No.: CPT-3
Location: 5300 S. UTA

Cone: 20 TON A 122
Date: 09:13:02 17:42

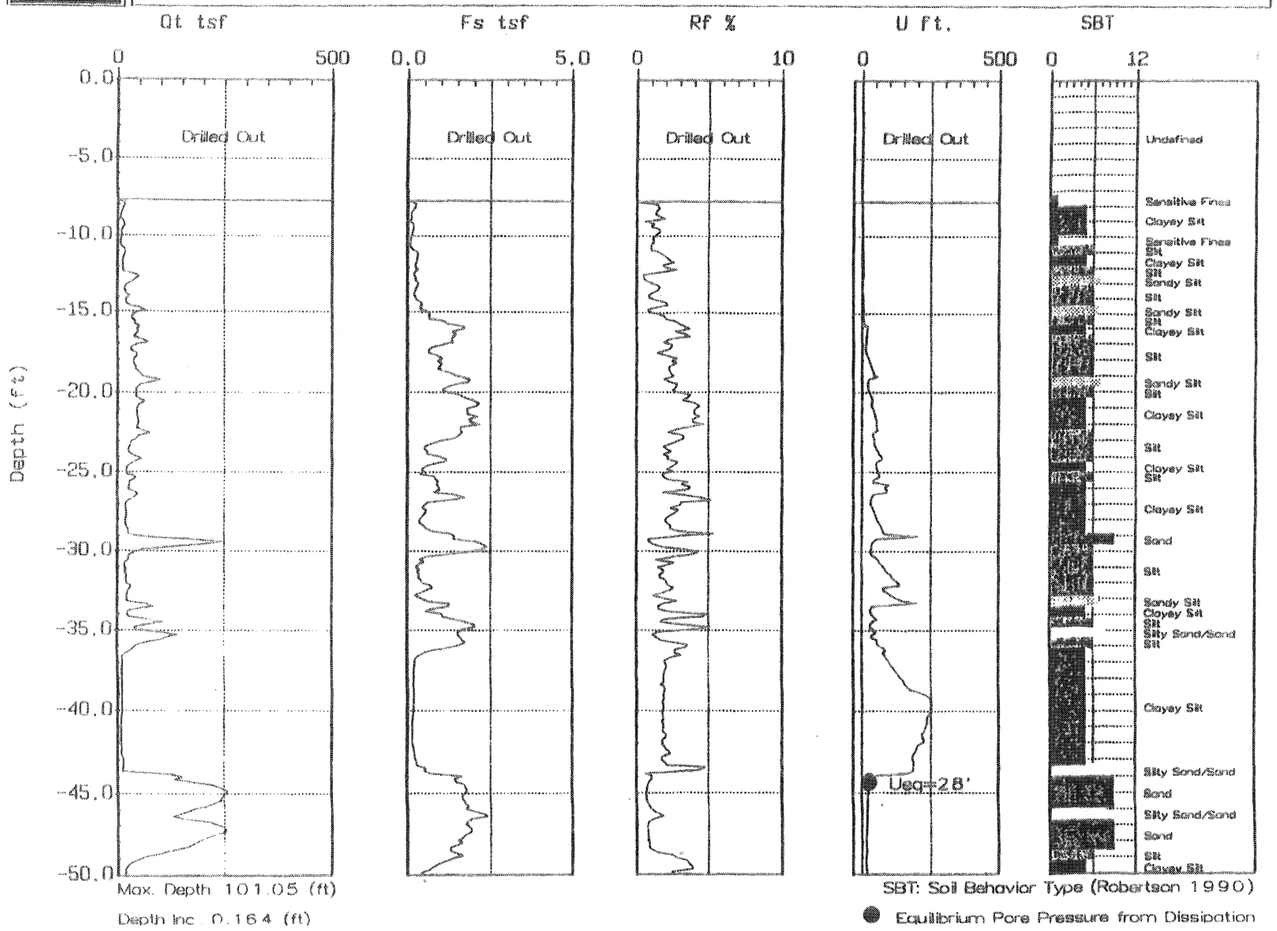

CONETEC

Terracon

Hole No.: CPT-3
Location: 5300 S. UTA

Cone: 20 TON A 122
Date: 09:13:02 17:42

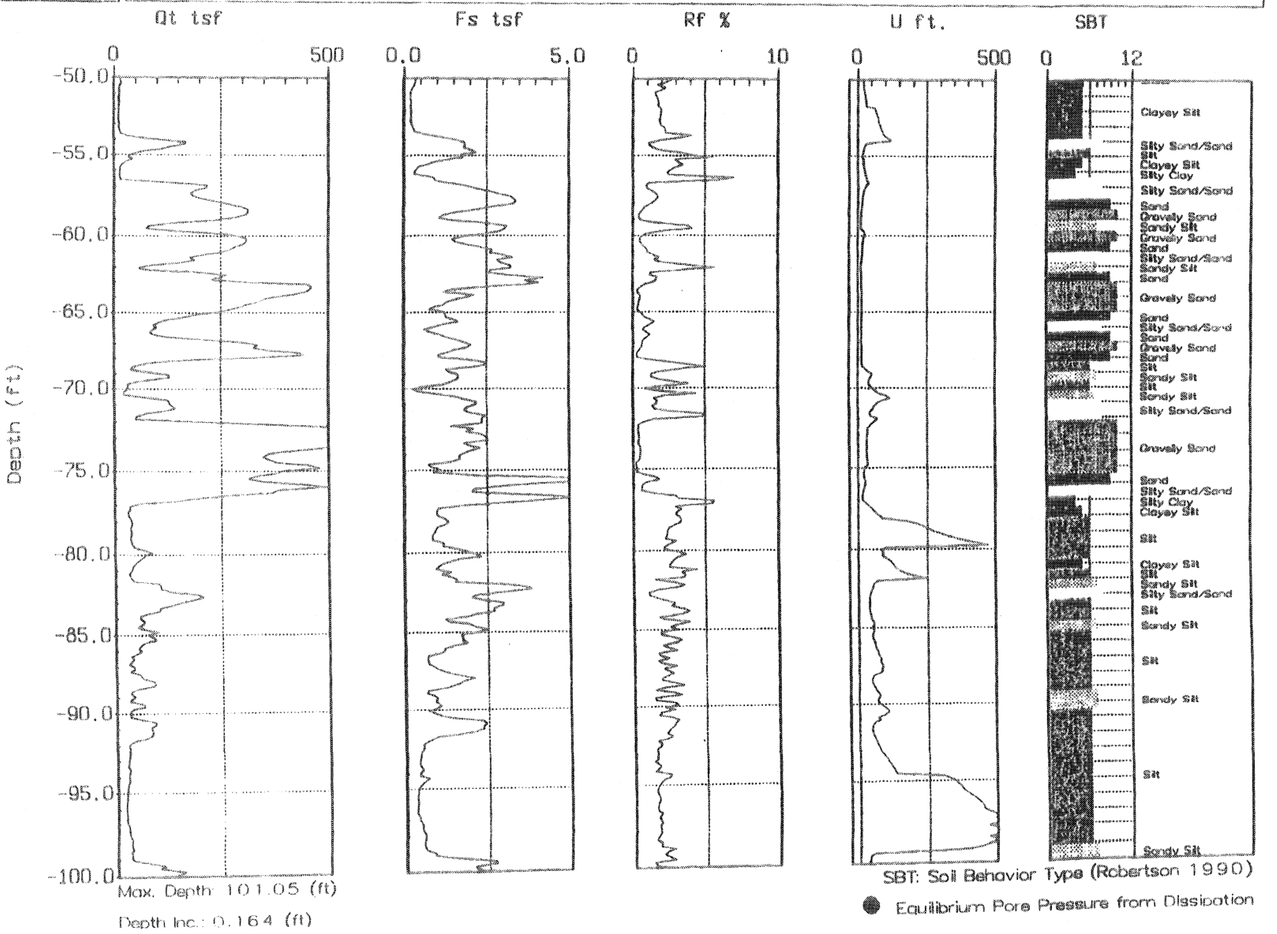

SALT LAKE COUNTY	COTTONWOOD STREET OVER UTA AND 5300 SOUTH	MURRAY CITY CORPORATION DEPARTMENT OF PUBLIC SERVICES -- ENGINEERING DIVISION 4646 SO 500 W. MURRAY UT. 84123 -- (801) 270-2400	NO.	RELEASE FOR CONSTRUCTION
PROJ. NO. C-923	SOIL DATA CPT-3	APPROVAL RECOM. DATE GEOTECHNICAL ENGR.	DATE	REMARKS
PROJECT NUMBER * HPP-STP-2148(1)0		APPROVED DATE UDOT BRIDGE ENGR.		
		DESIGN RLC 11/03 CHECK WJA 11/03		
		DRAWN RLC 11/03 CHECK WJA 11/03		
		QUANT. CHECK		

CONETEC

Terracon

APROX. SURFACE ELEV.: 4313
Hole No.: CPT-4
Location: 5300 SOUTH

Cone: 20 TON A 122
Date: 09:16:02 18:59

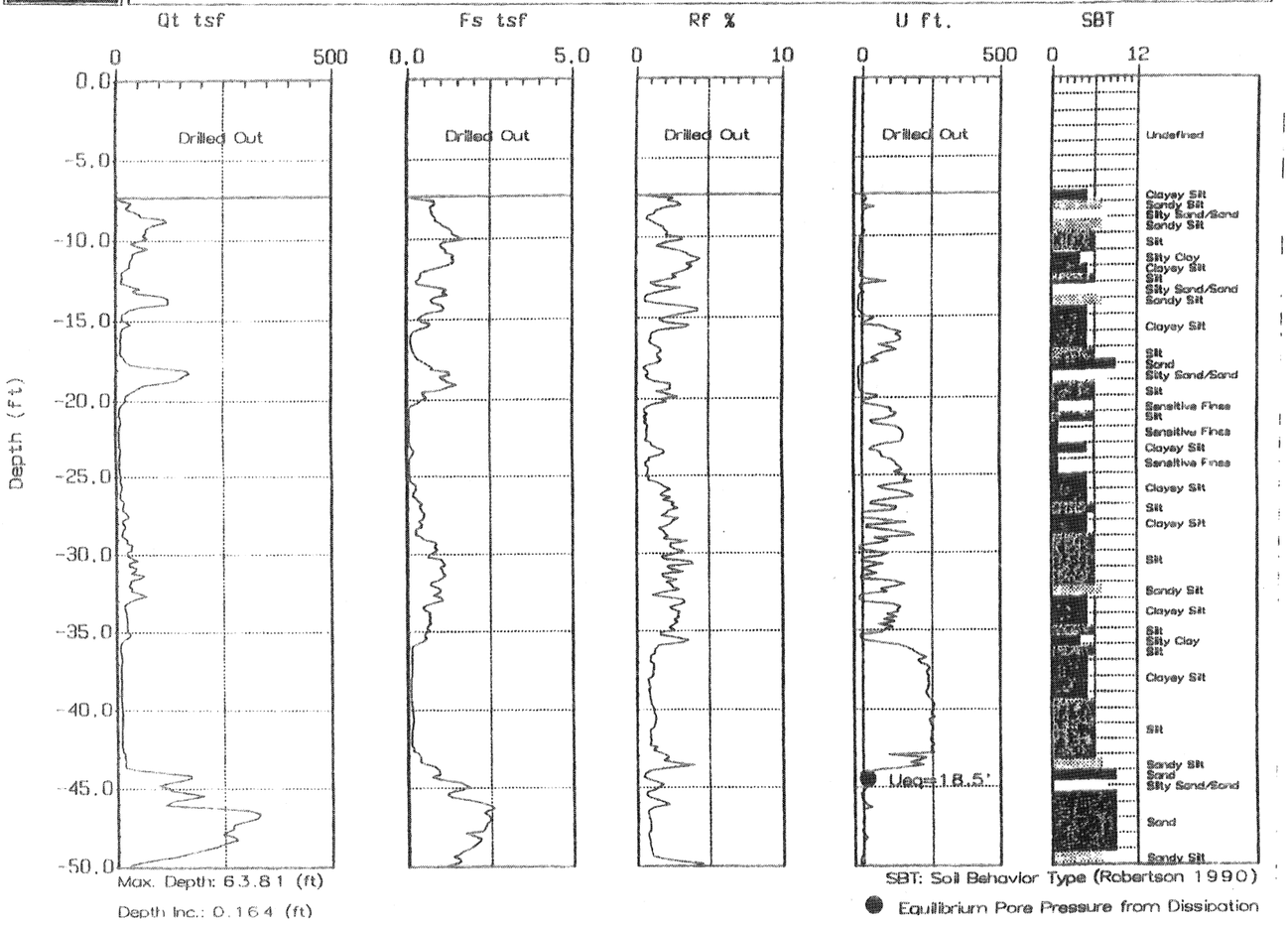

SBT: Soil Behavior Type (Robertson 1990)

● Equilibrium Pore Pressure from Dissipation

CONETEC

Terracon

Hole No.: CPT-4
Location: 5300 SOUTH

Cone: 20 TON A 122
Date: 09:16:02 18:59

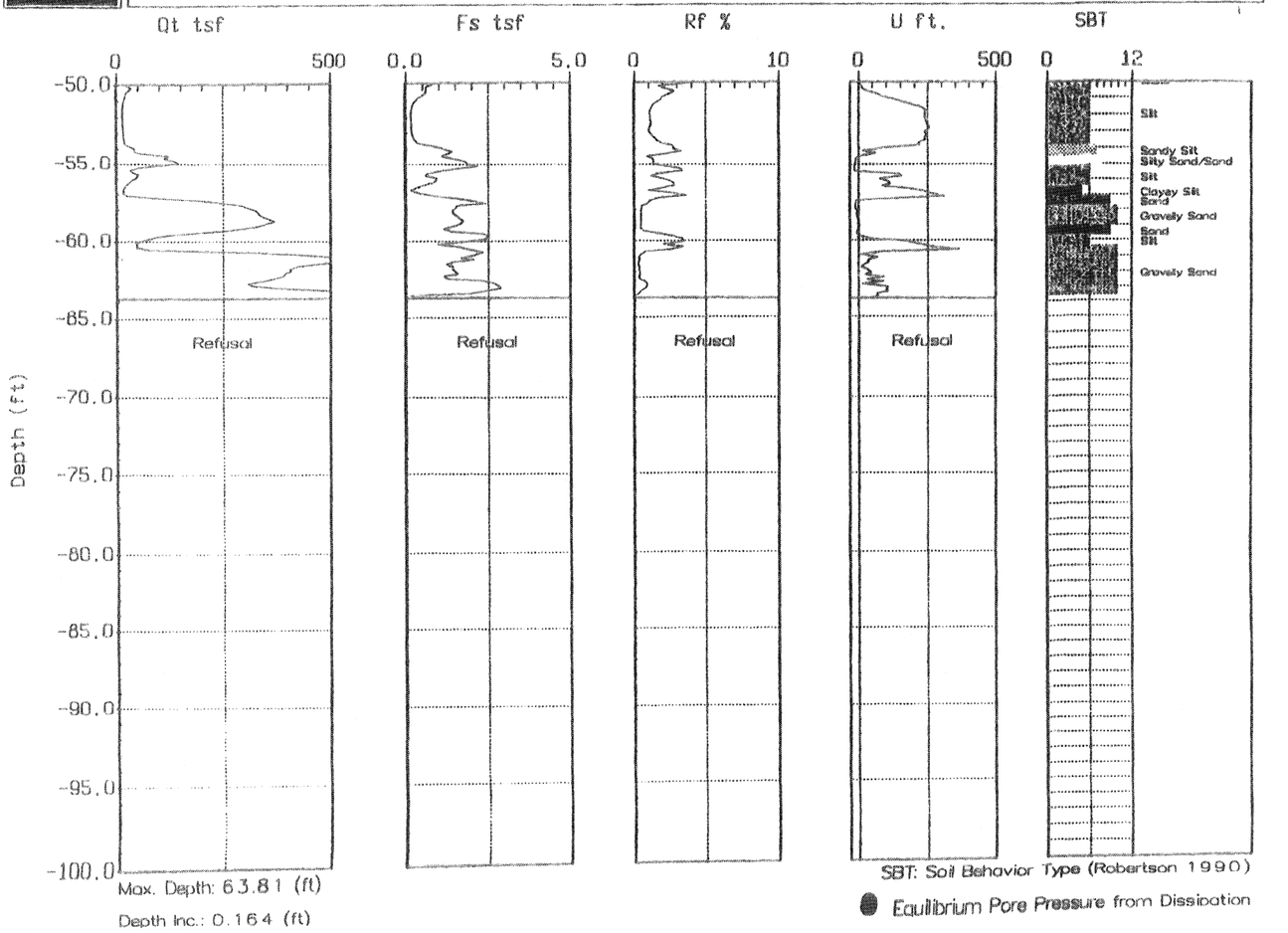

SBT: Soil Behavior Type (Robertson 1990)

● Equilibrium Pore Pressure from Dissipation

SALT LAKE COUNTY
C-923 SRC. NO.

COTTONWOOD STREET
OVER UTA AND 5300 SOUTH
SOIL DATA CPT-4
PROJECT NUMBER * HPP-STP-2148(1)0

MURRAY CITY CORPORATION
DEPARTMENT OF PUBLIC SERVICES -- ENGINEERING DIVISION
4646 SO 500 W, MURRAY UT, 84123 - (801) 270-2400

APPROVAL RECOMM. _____ DATE _____ GEOTECHNICAL ENGR.
APPROVED _____ DATE _____ UDOT BRIDGE ENGR.

DESIGN RLC 11/03 CHECK WJA 11/03
DRAWN RLC 11/03 CHECK WJA 11/03
QUANT. _____ CHECK _____

NO.	DATE	REMARKS
		RELEASE FOR CONSTRUCTION

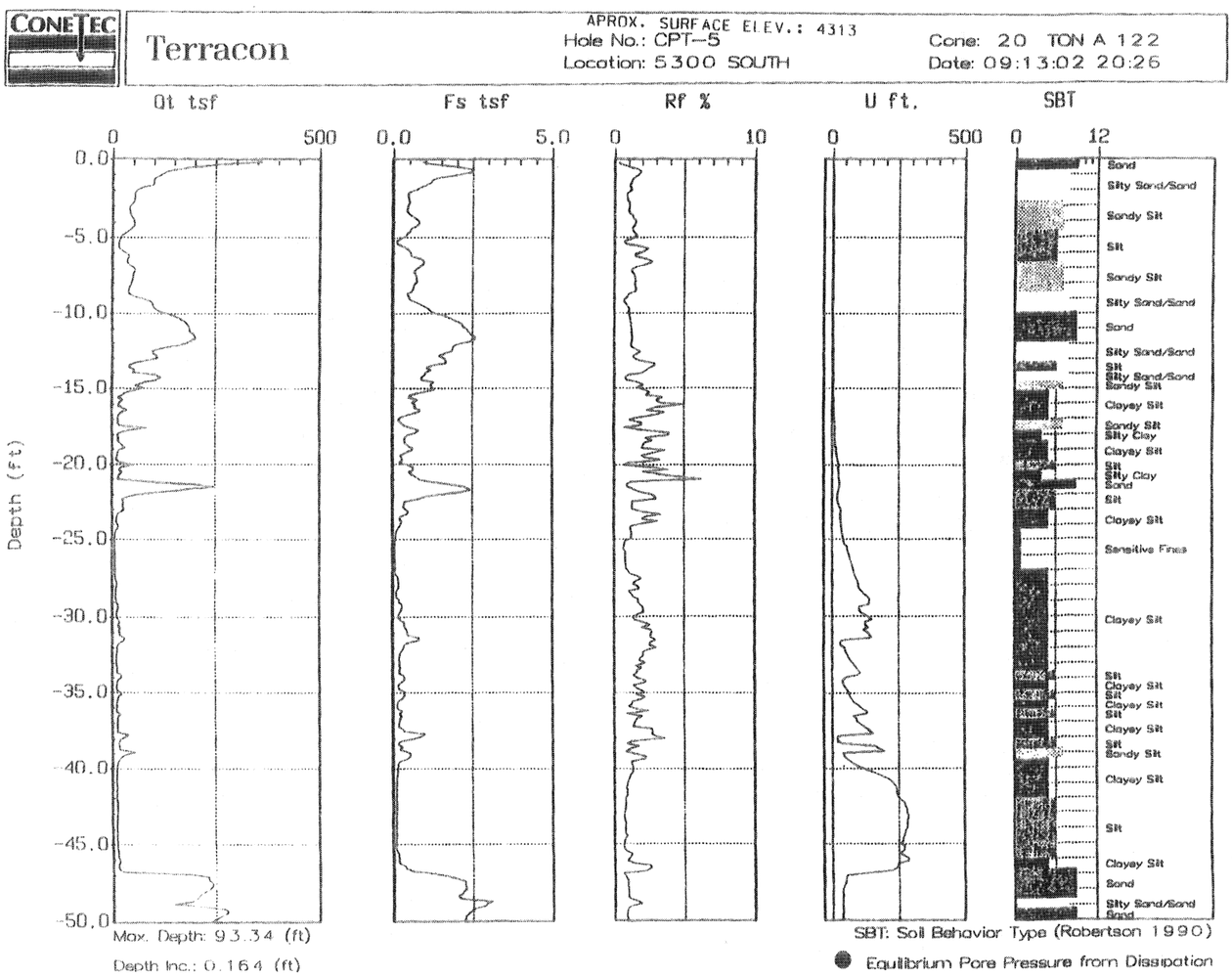

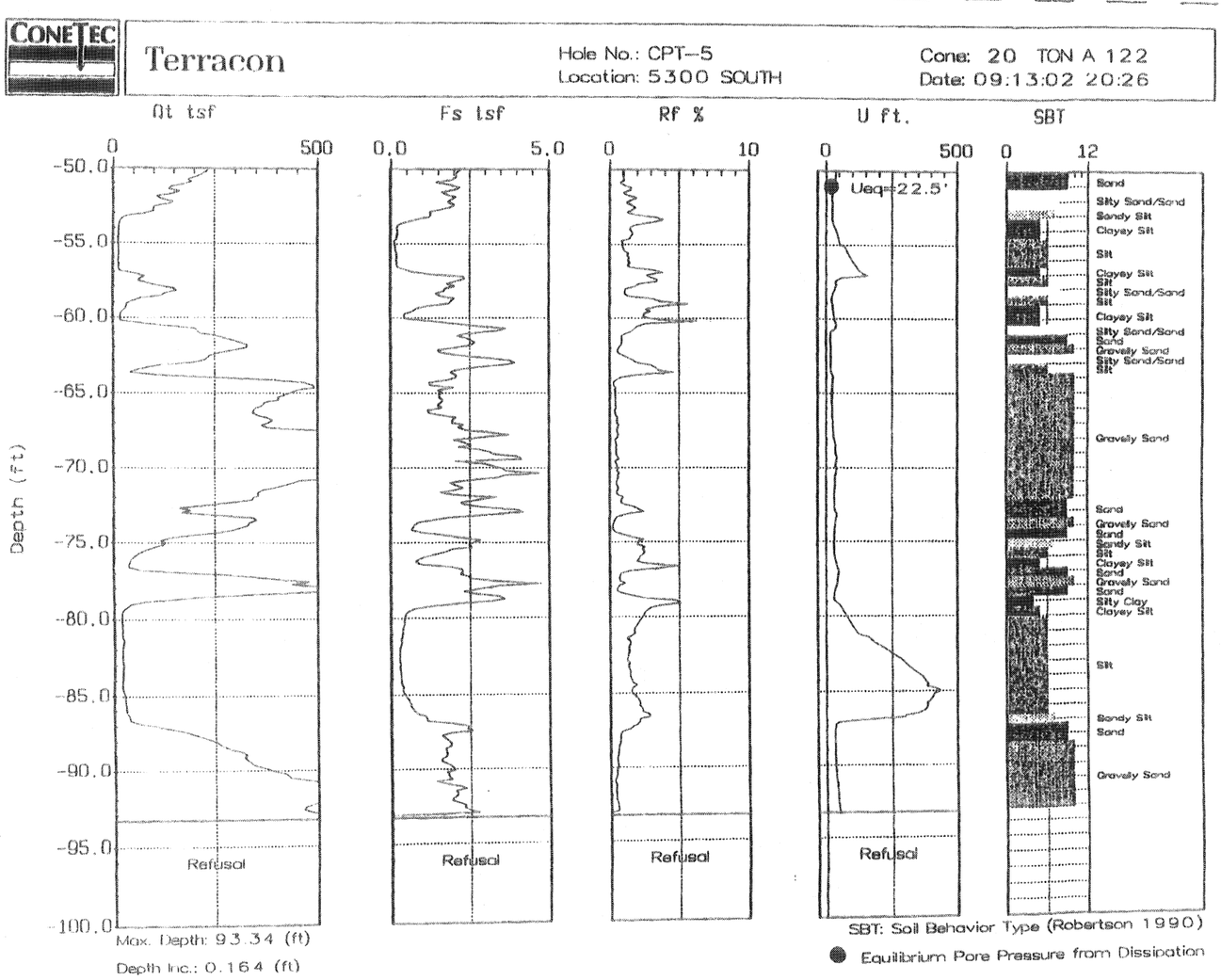

SALT LAKE COUNTY	COTTONWOOD STREET OVER UTA AND 5300 SOUTH	MURRAY CITY CORPORATION DEPARTMENT OF PUBLIC SERVICES -- ENGINEERING DIVISION 4646 SO 500 W. MURRAY UT. 84123 - (801) 270-2400	NO. / DATE / RELEASE FOR CONSTRUCTION
C-923	SOIL DATA CPT-5	APPROVAL RECOM. DATE GEOTECHNICAL ENGR.	DESIGN RLC 11/03 CHECK WJA 11/03
PROJECT NUMBER	* HPP-STP-2148(1)0	APPROVED DATE UDOT BRIDGE ENGR.	DRAWN RLC 11/03 CHECK WJA 11/03
			QUANT. CHECK

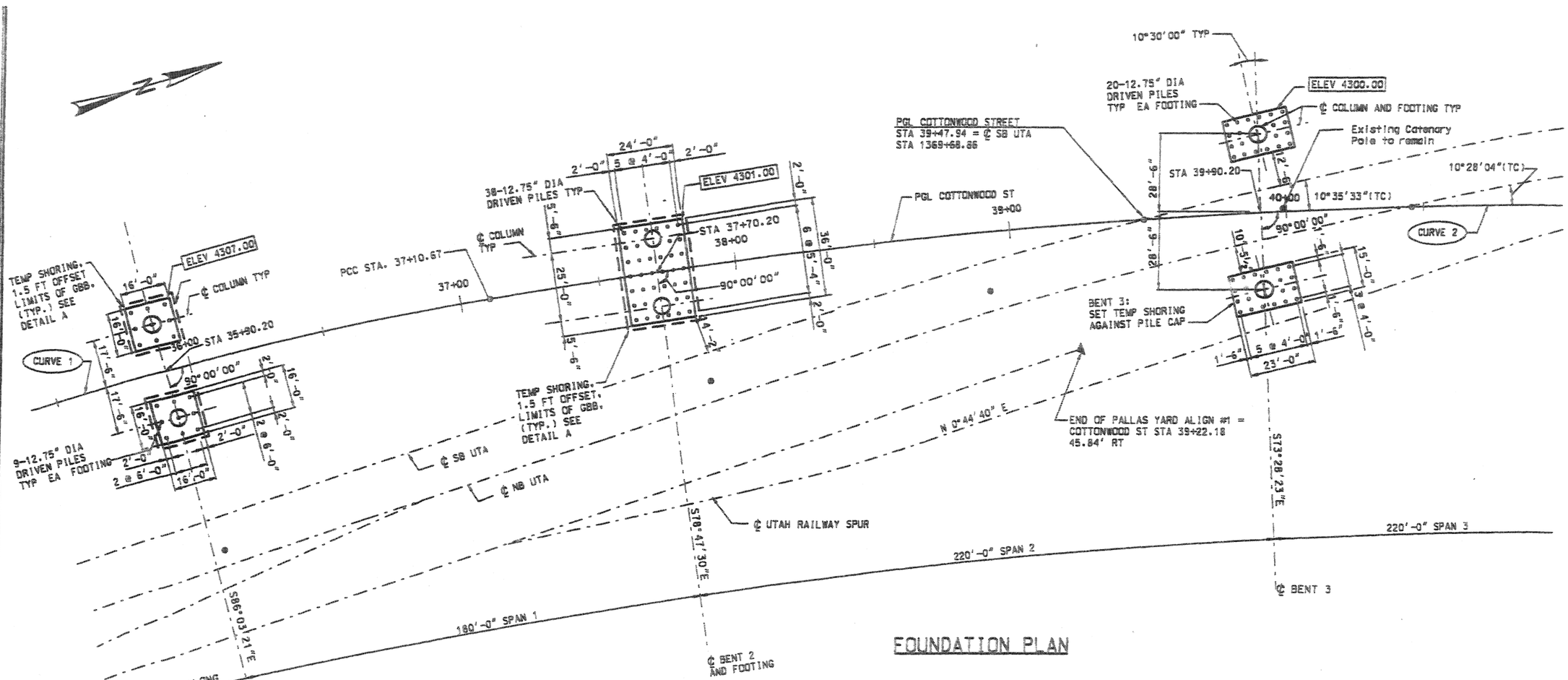

FOUNDATION PLAN

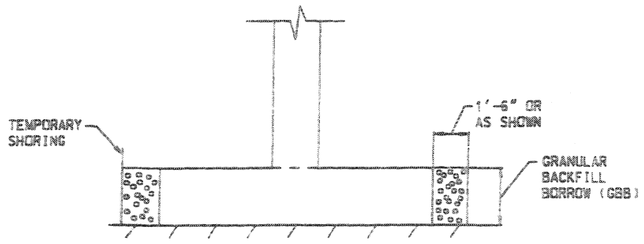

DETAIL A

(TYPICAL AT BENTS 1-5)

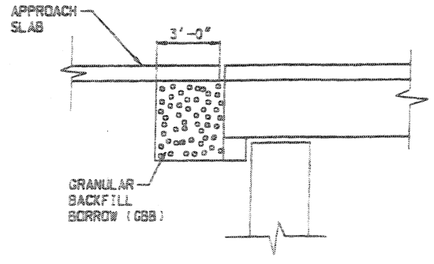

DETAIL B

(END DIAPHRAGM AT BENT 1)

PLACE GBB BEHIND END DIAPHRAGM AS SHOWN

PILE DATA								
LOCATION	PILE DIAMETER (IN)	MIN PILE TIP ELEVATION (FEET)	EST PILE TIP ELEVATION (FEET)	ALLOW PILE LOAD (KIP)	AS CONST PILE TIP ELEV (FEET)	ULTIMATE PILE CAPACITY (KIP)	DRIVING RESISTANCE FACTOR	MAX DRIVING LOAD (KIP)
BENT #1	12.75	4241.00	4221.00	160		640	0.9	608
BENT #2	12.75	4244.00	4224.00	160		640	0.9	608
BENT #3	12.75	4243.00	4223.00	160		640	0.9	608

FOUNDATION NOTES

1. ELEVATIONS AT BOTTOM OF FOOTING ARE ENCLOSED IN RECTANGLES E.G. ELEV 4307.00
2. STATIONS ARE ALONG PGL COTTONWOOD ST.
3. FOR GEOTECHNICAL INFORMATION SEE TERRACON REPORT "GEOTECHNICAL STRUCTURAL DESIGN REPORT 5300 SOUTH BRIDGE STRUCTURE", TERRACON PROJECT NO 61995099 DATED NOVEMBER 7, 2002.
4. FOR DRIVEN PILE DETAIL, SEE SHEET 8.
5. CONTRACTOR TO INSTALL TEMPORARY FENCE BETWEEN FOUNDATION CONSTRUCTION ACTIVITY AND RAILWAY LINES AT BENTS 1,2,3 AND 4.
6. CONTRACTOR SHALL SUBMIT SHORING PLANS FOR REVIEW AND APPROVAL. CONTRACTOR SHALL ALLOW 14 DAYS FOR THE ENGINEER TO REVIEW.
7. APPLY BOND BREAKER TO THE TEMPORARY SHORING WHEN PILE CAP WILL CAST AGAINST IT.
8. CONTRACTOR SHALL DRIVE PILES AFTER ALL SETTLEMENT HAS OCCURRED.
9. PLACE GRANULAR BACKFILL BORROW AROUND ALL FOOTINGS IN THE SPACE BETWEEN THE TEMPORARY SHORING AND THE FOOTINGS. SEE DETAIL A.

RELEASE FOR CONSTRUCTION

NO.	DATE	REMARKS

MURRAY CITY CORPORATION
DEPARTMENT OF PUBLIC SERVICES — ENGINEERING DIVISION
4646 SO 500 W, MURRAY UT, 84123 - (801) 270-2400

DESIGN KTF 5/03 | CHECK DCD 9/03
DRAWN TAB 5/03 | CHECK DCD 9/03
QUANT. KTF 5/03 | CHECK DCD 9/03

APPROVAL RECOMMEND. — DATE — SENIOR DESIGN ENGR.
APPROVED — DATE — UDOT BRIDGE ENGR.

COTTONWOOD STREET
OVER UTA AND 5300 SOUTH

FOUNDATION PLAN 1

PROJECT NUMBER * HPP-STP-2148(11)0

SALT LAKE COUNTY

C-923 DRG. NO.

SHT. 6 OF 54

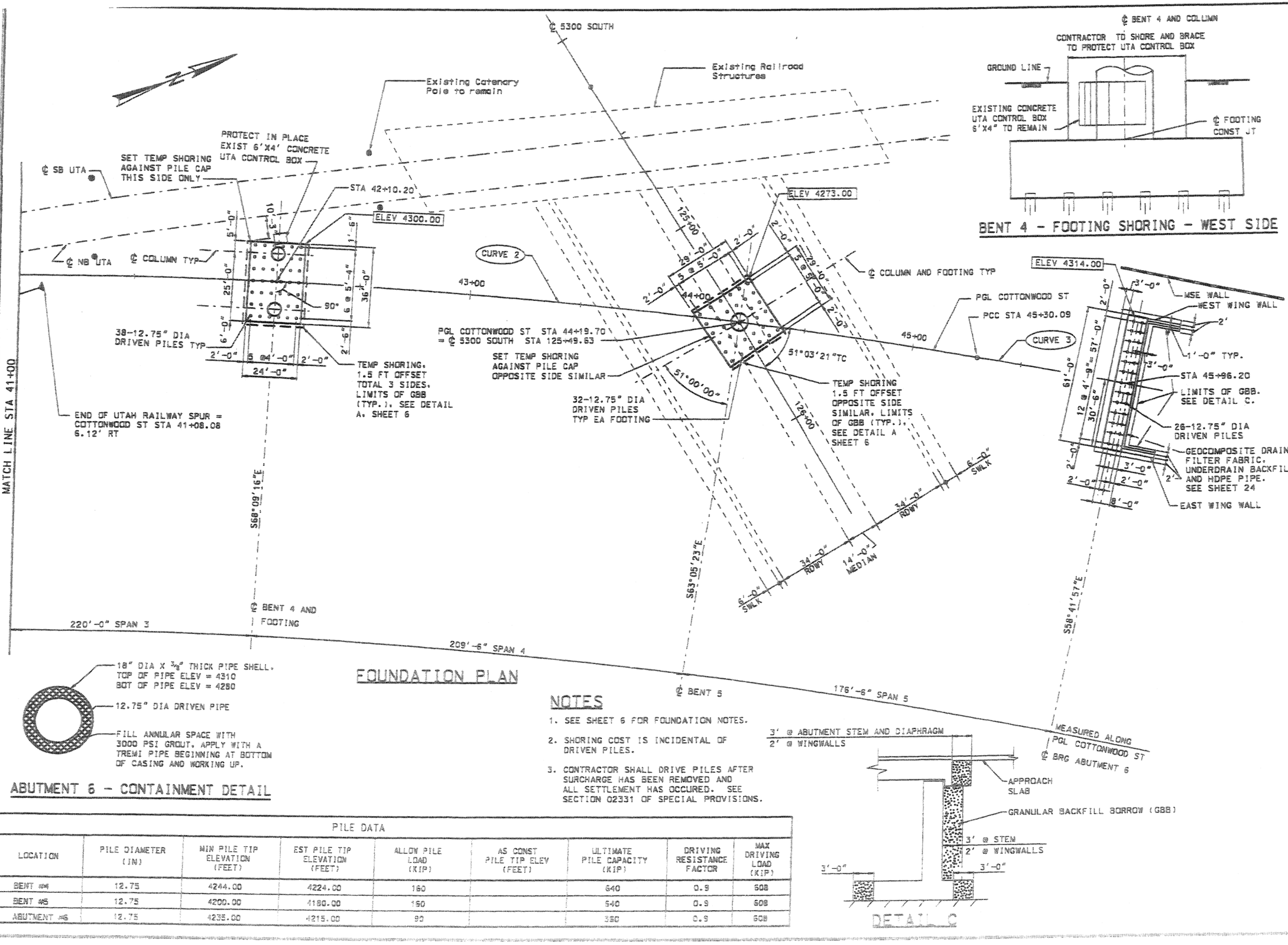

FOUNDATION PLAN

BENT 4 - FOOTING SHORING - WEST SIDE

ABUTMENT 6 - CONTAINMENT DETAIL

NOTES

1. SEE SHEET 6 FOR FOUNDATION NOTES.
2. SHORING COST IS INCIDENTAL OF DRIVEN PILES.
3. CONTRACTOR SHALL DRIVE PILES AFTER SURCHARGE HAS BEEN REMOVED AND ALL SETTLEMENT HAS OCCURED. SEE SECTION 02331 OF SPECIAL PROVISIONS.

DETAIL C

PILE DATA

LOCATION	PILE DIAMETER (IN)	MIN PILE TIP ELEVATION (FEET)	EST PILE TIP ELEVATION (FEET)	ALLOW PILE LOAD (KIP)	AS CONST PILE TIP ELEV (FEET)	ULTIMATE PILE CAPACITY (KIP)	DRIVING RESISTANCE FACTOR	MAX DRIVING LOAD (KIP)
BENT #4	12.75	4244.00	4224.00	160		640	0.9	608
BENT #5	12.75	4200.00	4180.00	160		640	0.9	608
ABUTMENT #6	12.75	4235.00	4215.00	90		360	0.9	608

RELEASE FOR CONSTRUCTION

NO.	DATE	REMARKS

MURRAY CITY CORPORATION
DEPARTMENT OF PUBLIC SERVICES — ENGINEERING DIVISION
4646 SO 500 W. MURRAY UT. 84123 - (801) 270-2400

DESIGN KTF 5/03 CHECK DCO 9/03
DRAWN TAB 5/03 CHECK DCO 9/03
QUANT. KTF 5/03 CHECK DCO 9/03

APPROVAL RECOMM. — DATE — CENTRAL DESIGN ENGR.
APPROVED — DATE — TRAFFIC ENGR.

COTTONWOOD STREET
OVER UTA AND 5300 SOUTH
FOUNDATION PLAN 2
PROJECT NUMBER * HPP-STP-2148(110)

SALT LAKE COUNTY
C-923
DRG. NO.
SHT. 7 OF 54

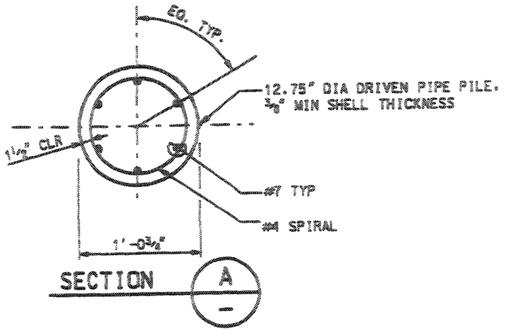

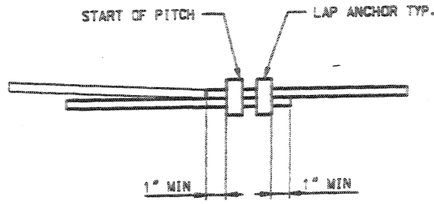

SPIRAL SPLICE DETAIL - LAP ANCHOR

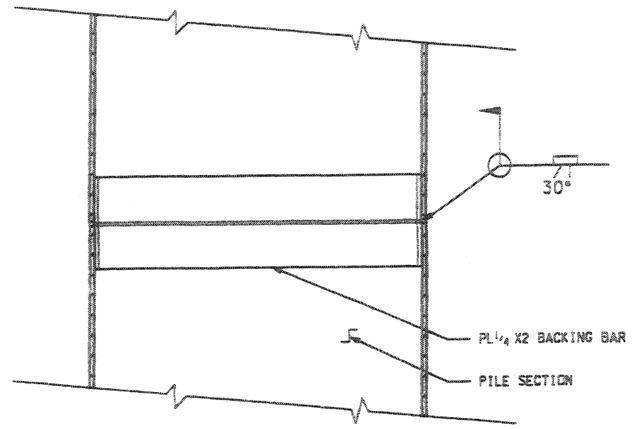

PIPE SHELL SPLICE DETAIL

SPLICES SHALL BE COMPLETE PENETRATION WELDED SPLICES

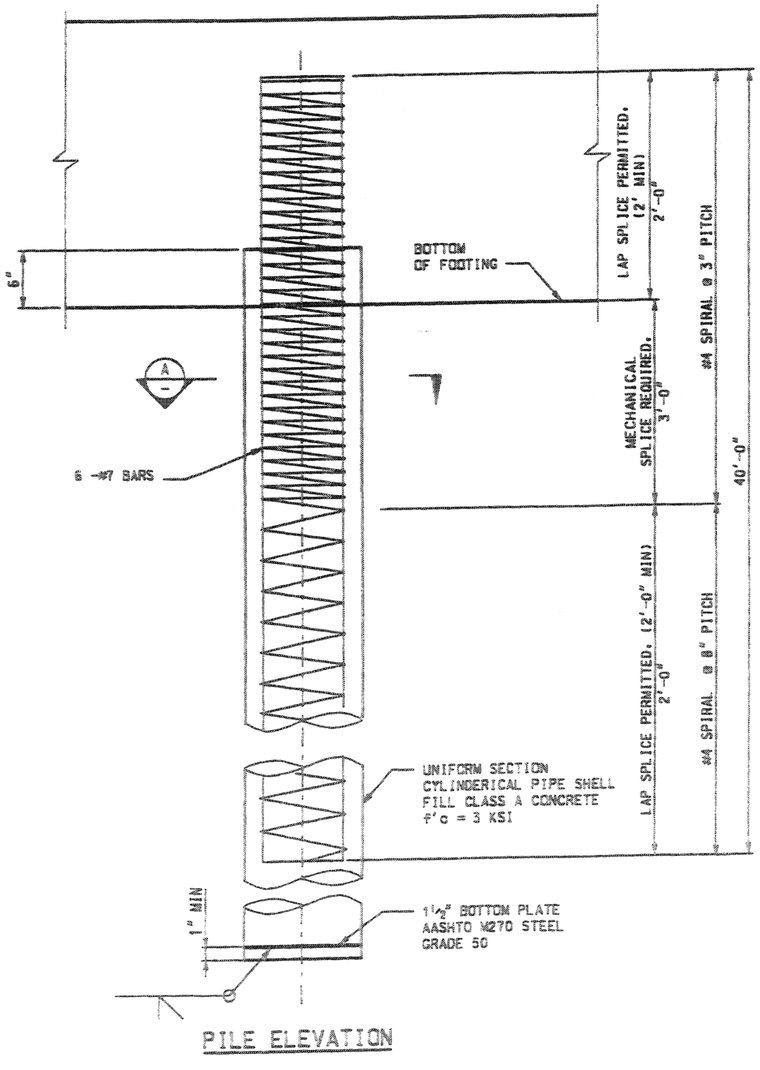

PILE ELEVATION

DRIVEN PILE NOTES

1. FILL PILE SHELLS WITH CLASS A CONCRETE f'c = 3 KSI
2. HOLD REINFORCING STEEL ADEQUATELY IN FINAL POSITION DURING PLACEMENT OF CONCRETE AROUND BARS.
3. PILE REINFORCING STEEL MAY BE UNCOATED.
4. SEE SHEET 6 AND 7 FOR ADDITIONAL PILE DATA.
5. MINIMUM HAMMER ENERGY = 40 FT-KIP.

QUANTITIES

DRIVEN PILES 12.75 INCH	1941.00	LF

RELEASE FOR CONSTRUCTION

REMARKS

NO.	DATE

MURRAY CITY CORPORATION
DEPARTMENT OF PUBLIC SERVICES — ENGINEERING DIVISION
4646 SO 500 W. MURRAY UT. 84123 - (801) 270-2400

DESIGN KTF 5/03 CHECK DCO 9/03
DRAWN TAB 5/03 CHECK DCO 9/03
QUANT. KTF 5/03 CHECK DCO 9/03

APPROVAL RECOMM. ENGR. — DATE — SENIOR BRIDGE ENGR. — DATE
APPROVED — DATE — SENIOR BRIDGE ENGR. — DATE

COTTONWOOD STREET
OVER UTA AND 5300 SOUTH
DRIVEN PILE DETAILS
PROJECT NUMBER * HPP-STP-2148(110)

SALT LAKE COUNTY
C-923 DRG. NO.
SHT. 8 OF 64

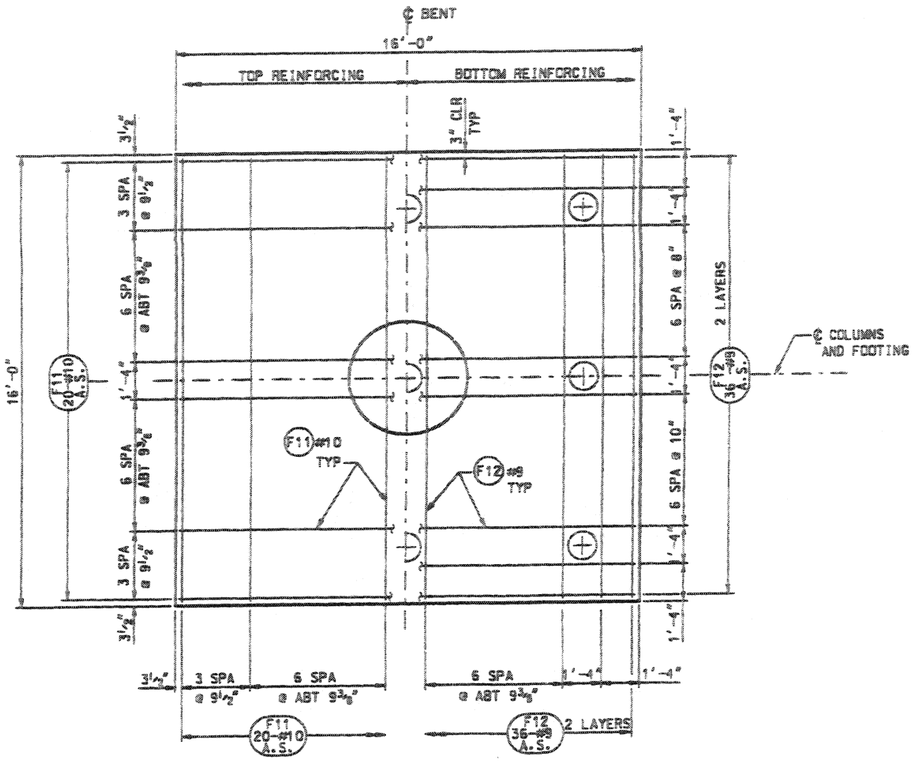

FOOTING PLAN – BENT 1

(ADJUST SPACING OF PILE CAP REINFORCEMENT UP TO 4" TO ACCOMMODATE COLUMN REINFORCEMENT AND PILE REINFORCEMENT)

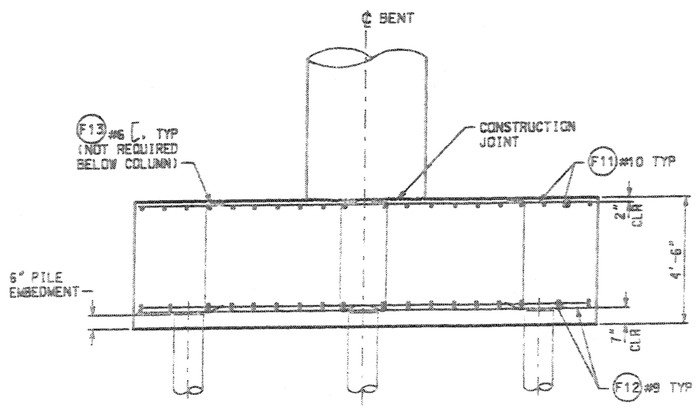

ELEVATION – BENT 1

(COLUMN AND PILE REINFORCEMENT NOT SHOWN FOR CLARITY)

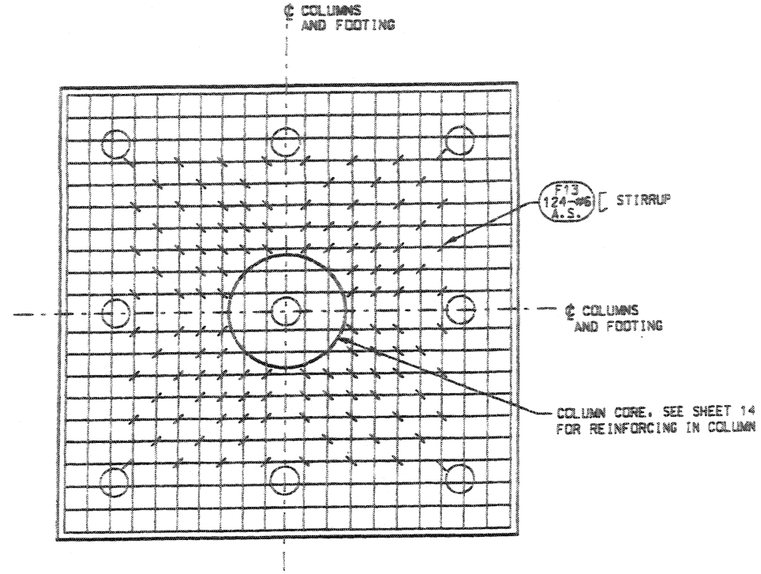

FOOTING TIE SPACING – BENT 1

(TOP REINFORCING SHOWN, HOOK BARS AROUND BOTTOM MAT OF REINFORCING AS SHOWN IN ELEVATION)

RELEASE FOR CONSTRUCTION

NO.	DATE	REMARKS

MURRAY CITY CORPORATION
DEPARTMENT OF PUBLIC SERVICES — ENGINEERING DIVISION
4646 SO 500 W. MURRAY UT, 84123 – (801) 270-2400

DESIGN	KTF	5/03	CHECK DCO 9/03
DRAWN	EMG	5/03	CHECK DCO 9/03
QUANT.	KTF	5/03	CHECK DCO 9/03

OPTIONAL MECHAN. ENGR. — DATE — SENIOR BRIDGE ENGR. — DATE
APPROVED — DATE — UDOT BRIDGE ENGR.

COTTONWOOD STREET
OVER UTA AND 5300 SOUTH
FOOTING DETAILS – BENT 1
PROJECT NUMBER * HPP-STP-2148(110)

SALT LAKE COUNTY
C-923 DRG. NO.

QUANTITIES
STRUCTURAL CONCRETE AA(AE)

FOOTING BENT 1	85.3 CY	SHT. NO.	13 OF 54

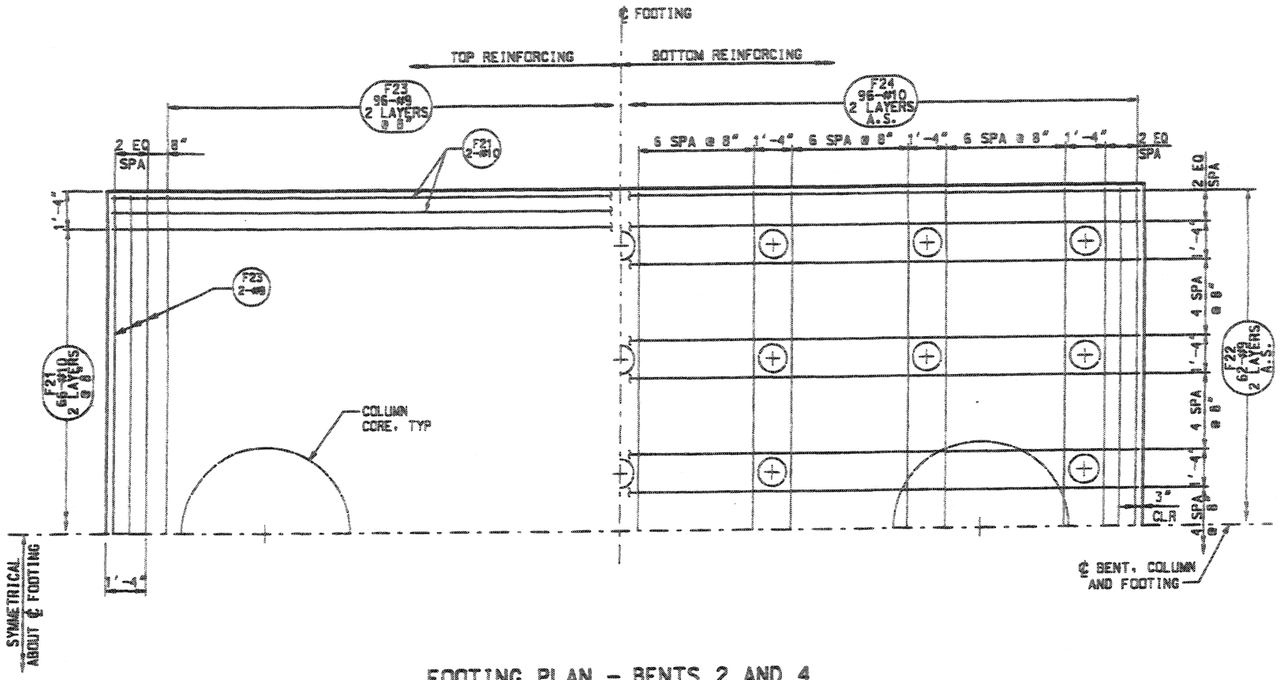

FOOTING PLAN – BENTS 2 AND 4

(ADJUST SPACING OF PILE CAP REINFORCEMENT UP TO 4" TO ACCOMMODATE COLUMN REINFORCEMENT AND PILE REINFORCEMENT)

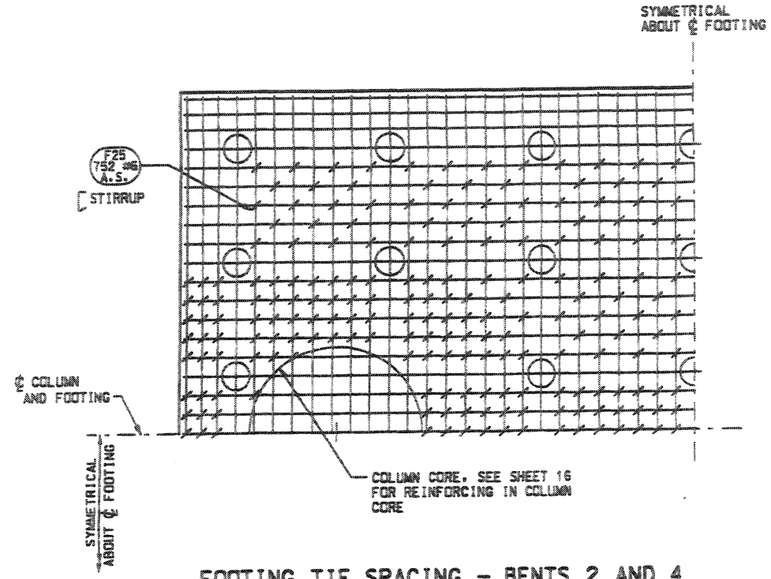

FOOTING TIE SPACING – BENTS 2 AND 4

(TOP REINFORCING SHOWN, HOOK BARS AROUND BOTTOM MAT OF REINFORCING AS SHOWN IN ELEVATION)

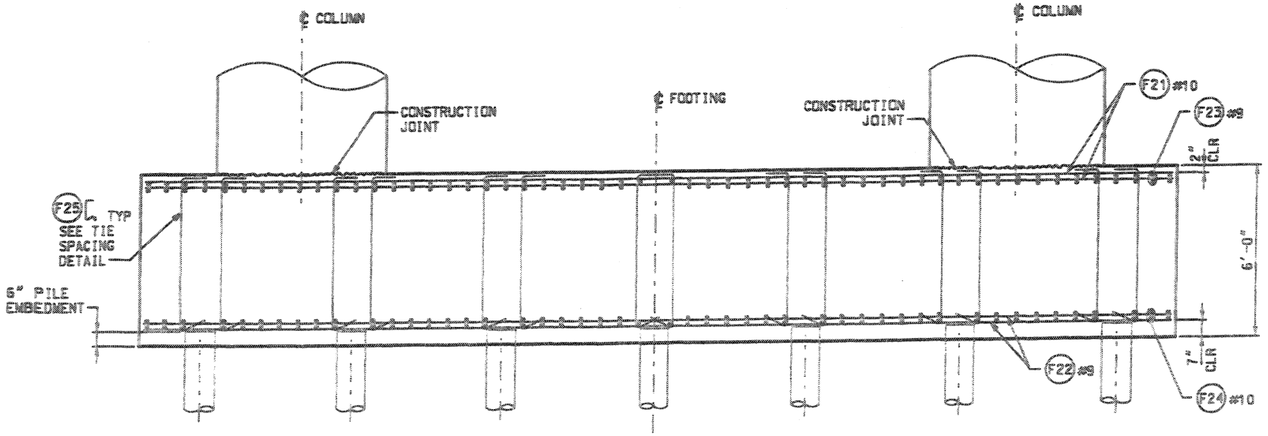

ELEVATION – BENTS 2 AND 4

(COLUMN AND PILE REINFORCEMENT NOT SHOWN FOR CLARITY)

QUANTITIES STRUCTURAL CONCRETE AA(AE)	
FOOTING BENT 2	192.0 CY
FOOTING BENT 4	192.0 CY
TOTAL	384.0 CY

RELEASE FOR CONSTRUCTION

NO.	DATE	REMARKS

MURRAY CITY CORPORATION
DEPARTMENT OF PUBLIC SERVICES — ENGINEERING DIVISION
4646 SO 500 W. MURRAY UT. 84123 – (801) 270-2400

DESIGN	KTF	5/03	CHECK DCO 9/03
DRAWN	EMG	5/03	CHECK DCO 9/03
QUANT.	KTF	5/03	CHECK DCO 9/03

APPROVAL RECOMM. — SENIOR DESIGN ENGR. — DATE
APPROVED — DIST ENGR. — DATE

COTTONWOOD STREET
OVER UTA AND 5300 SOUTH
FOOTING DETAILS – BENT 2 & 4
PROJECT NUMBER * HPP-STP-2148(1)0

SALT LAKE COUNTY
C-923 DRG. NO.
SHT. 10 OF 34

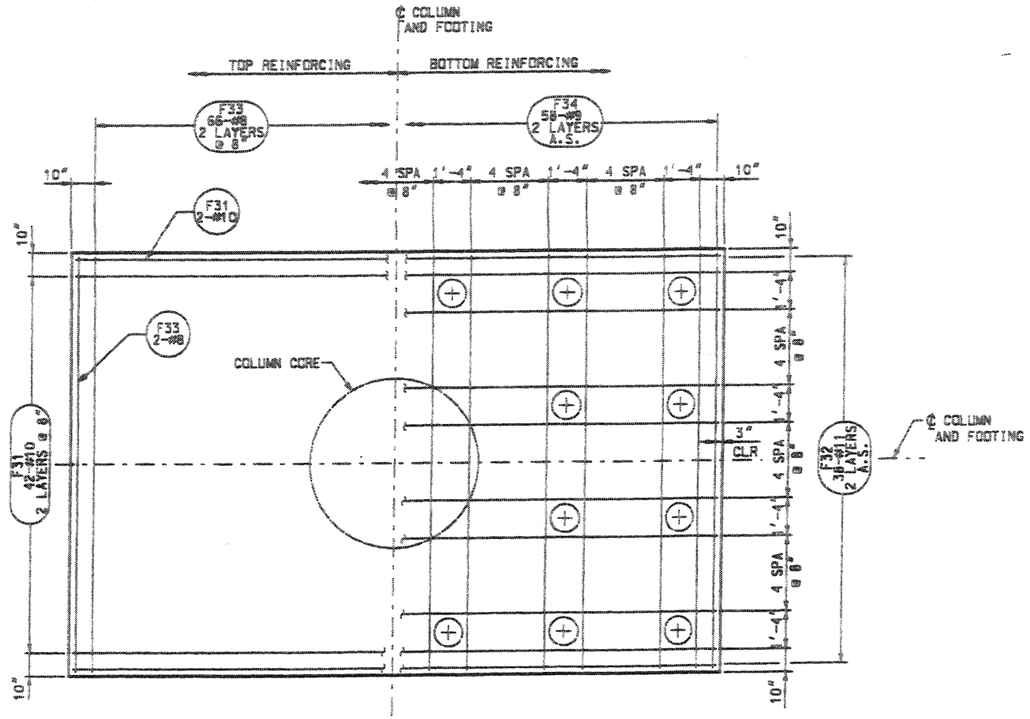

FOOTING PLAN - BENT 3

(ADJUST SPACING OF PILE CAP REINFORCEMENT UP TO 4" TO ACCOMMODATE COLUMN REINFORCEMENT AND PILE REINFORCEMENT)

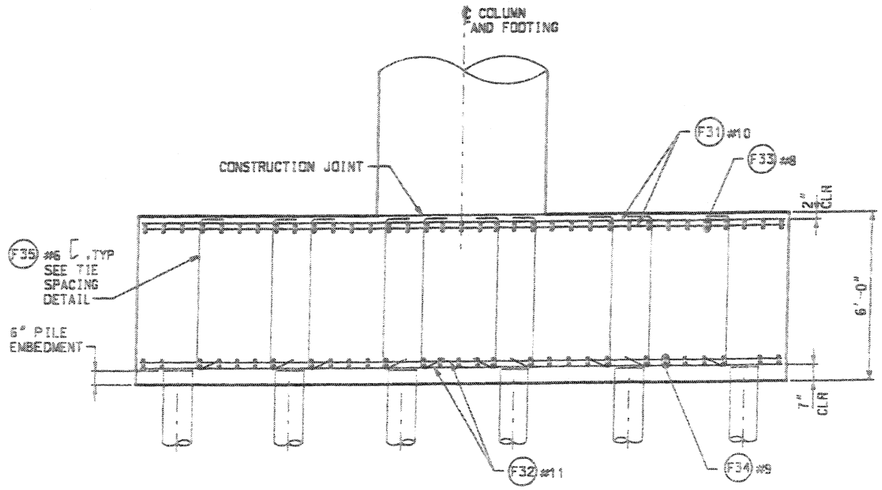

ELEVATION - BENT 3

(COLUMN AND PILE REINFORCEMENT NOT SHOWN FOR CLARITY)

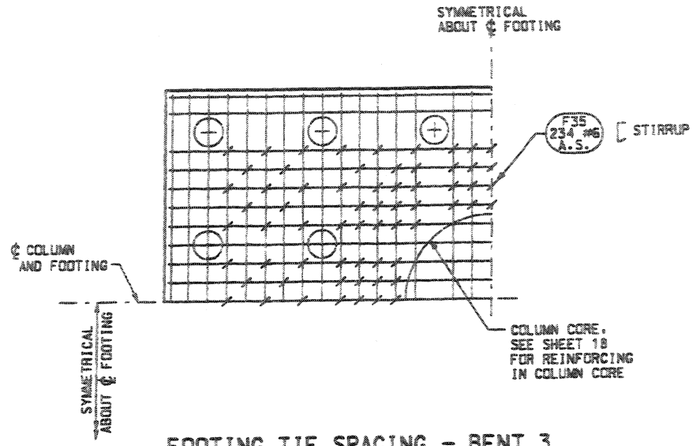

FOOTING TIE SPACING - BENT 3

(TOP REINFORCING SHOWN, HOOK BARS AROUND BOTTOM MAT OF REINFORCING AS SHOWN IN ELEVATION)

RELEASE FOR CONSTRUCTION

NO.	DATE	REMARKS

MURRAY CITY CORPORATION
DEPARTMENT OF PUBLIC SERVICES -- ENGINEERING DIVISION
4646 SO 500 W. MURRAY UT. 84123 - (801) 270-2400

DESIGN KTF 5/03	CHECK DCD 9/03	APPROVAL RECOMM. DATE	SENIOR DESIGN ENGR.
DRAWN EMG 5/03	CHECK DCD 9/03	APPROVED DATE	UDOT BRIDGE ENGR.
QUANT. KTF 5/03	CHECK DCD 9/03		

COTTONWOOD STREET
OVER UTA AND 5300 SOUTH
FOOTING DETAILS -- BENT 3
PROJECT NUMBER * HPP-STP-2148(11)0

SALT LAKE COUNTY

C-923 DRG. NO.

SHT. 11 OF 54

QUANTITIES
STRUCTURAL CONCRETE AA(AE)

FOOTING BENT 3	153.3 CY

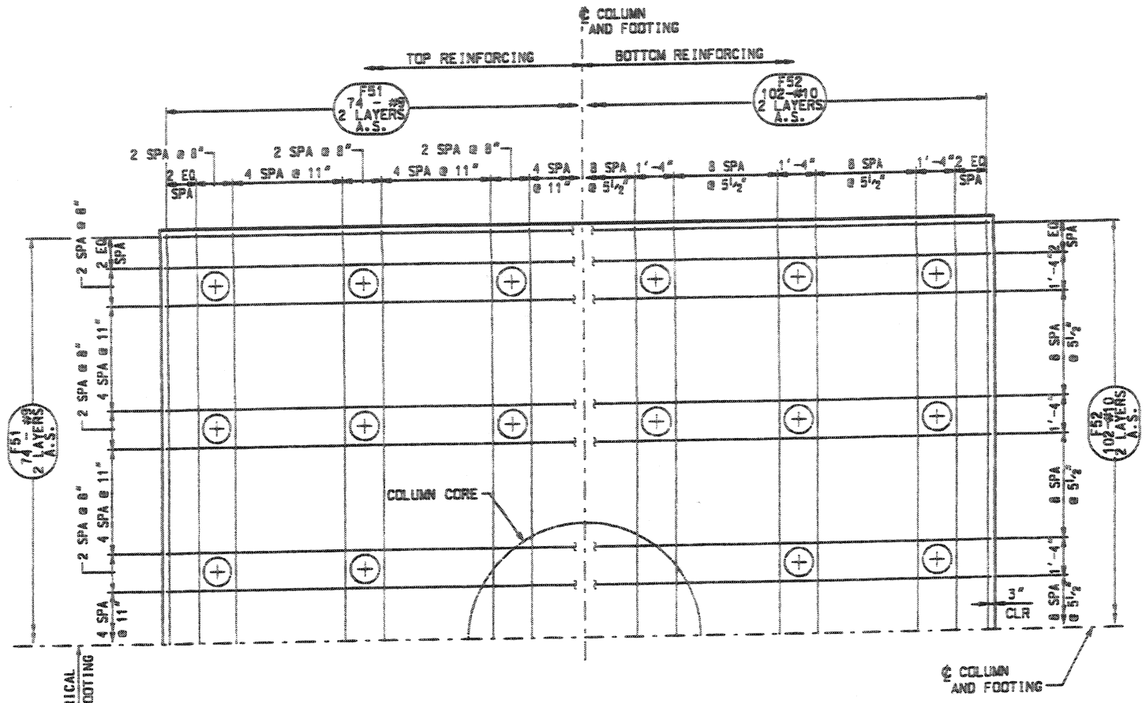

FOOTING PLAN - BENT 5

(ADJUST SPACING OF PILE CAP REINFORCEMENT UP TO 4" TO ACCOMMODATE COLUMN REINFORCEMENT AND PILE REINFORCEMENT)

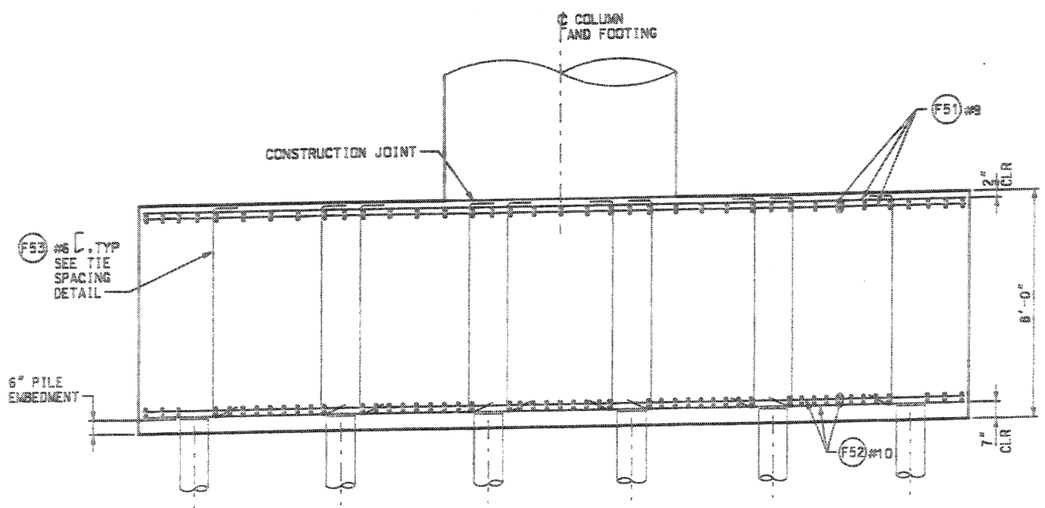

ELEVATION - BENT 5

(COLUMN AND PILE REINFORCEMENT NOT SHOWN FOR CLARITY)

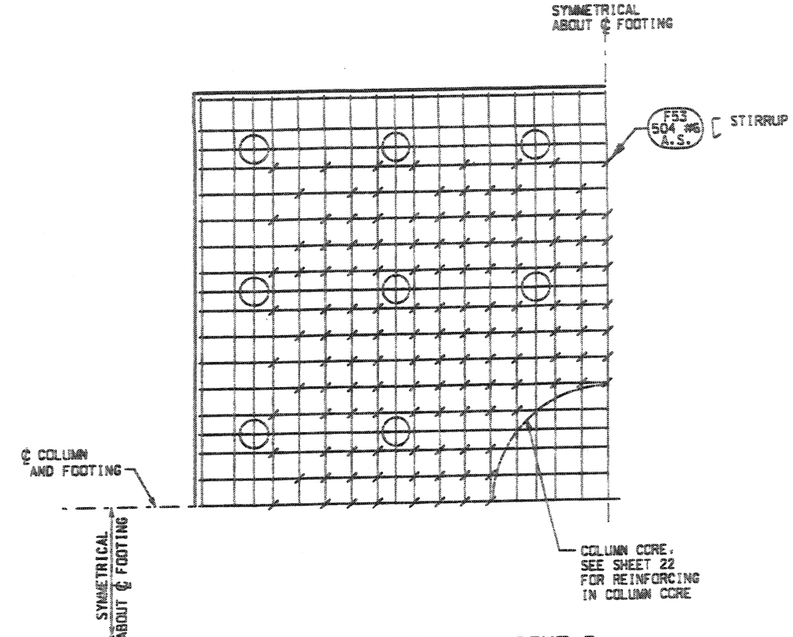

FOOTING TIE SPACING - BENT 5

(TOP REINFORCING SHOWN, HOOK BARS AROUND BOTTOM MAT OF REINFORCING AS SHOWN IN ELEVATION)

RELEASE FOR CONSTRUCTION

NO.	DATE	REMARKS

MURRAY CITY CORPORATION
DEPARTMENT OF PUBLIC SERVICES — ENGINEERING DIVISION
4646 SO 500 W. MURRAY UT. 84123 - (801) 270-2400

DESIGN KTF 5/03	CHECK DCO 9/03	APPROVAL RECOM.	SENIOR DESIGN ENGR. DATE
DRAWN EMG 5/03	CHECK DCO 9/03	APPROVED	CITY ENGR. DATE
QUANT. KTF 5/03	CHECK DCO 9/03		

COTTONWOOD STREET
OVER UTA AND 5300 SOUTH

FOOTING DETAILS - BENT 5

PROJECT NUMBER * HPP-STP-2148(1)0

SALT LAKE COUNTY

C-923 DRG. NO.

QUANTITIES
STRUCTURAL CONCRETE (AASHTO)

FOOTING BENT 5 249.2 CY

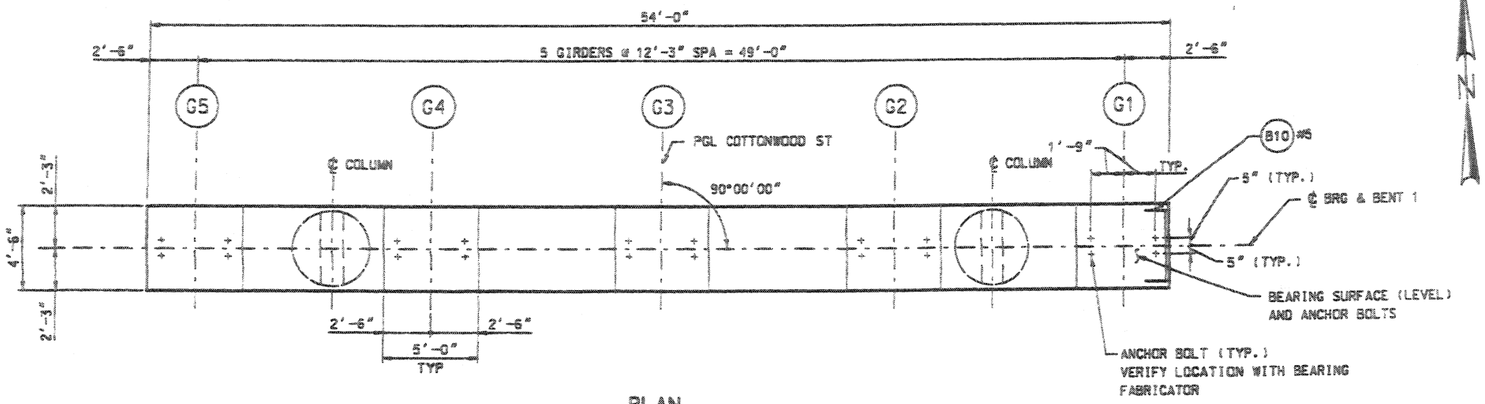

PLAN

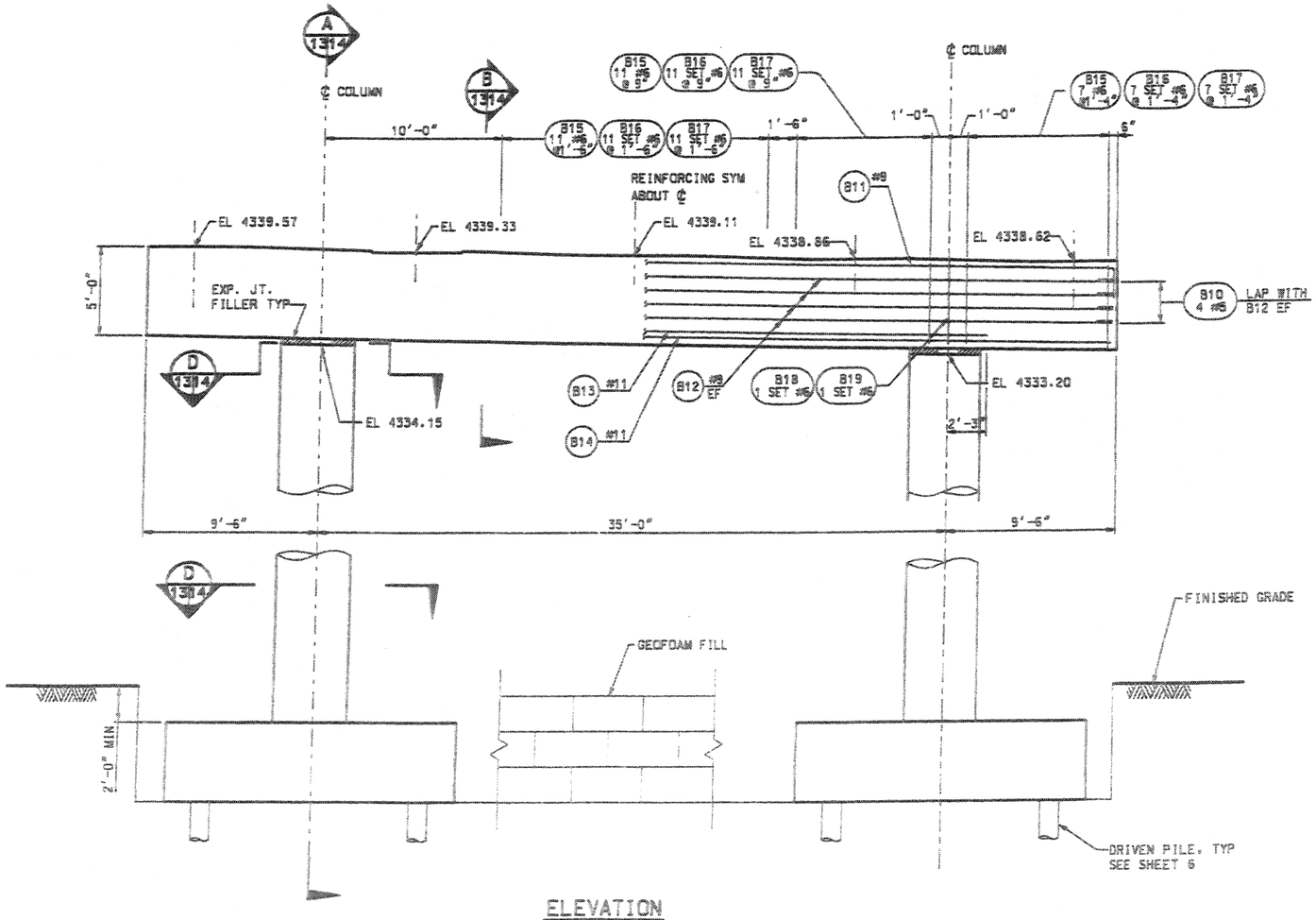

ELEVATION
(SHOWING CAP REINFORCING STEEL)

NOTES

1. TOP OF COLUMN ELEVATIONS ARE AT ℄ COLUMN AND ℄ BENT.
2. PLACE STIRRUPS NORMAL TO ℄ BENT.
3. FOR SECTIONS, SEE SHEET 14.
4. FOR BOTTOM OF FOOTING ELEVATIONS, SEE SHEET 6.
5. FOR FOOTING REINFORCING, SEE SHEET 9.
6. SEE SHEET 33 FOR EXPANSION BEARING AND ANCHOR BOLT DETAIL. ADJUST SPACING OF BENT CAP REINFORCING UP TO 4" TO ACCOMMODATE ANCHOR BOLTS. MAINTAIN AT LEAST THREE BAR DIAMETERS CLEAR SPACING BETWEEN BARS.
7. FINISH BEARING SURFACES 6 INCHES LARGER THAN THE MASONRY PLATE. PLACE CONCRETE HIGH AND RUB OR GRIND LEVEL AND FLAT TO THE ELEVATION SHOWN. NO GROUTING ALLOWED.

QUANTITIES
STRUCTURAL CONCRETE 3A(AE)

LOCATION	BENT 1
BENT CAP	45.0 CY
COLUMNS	20.7 CY
TOTAL	65.7 CY

RELEASE FOR CONSTRUCTION

NO.	DATE	REMARKS

MURRAY CITY CORPORATION
DEPARTMENT OF PUBLIC SERVICES — ENGINEERING DIVISION
4646 SO 500 W. MURRAY UT., 84123 - (801) 270-2400

DESIGN	DCO	5/03	
DRAWN	IAB	5/03	
CHKD.	DCO	5/03	
CHECK	DM	9/03	
CHECK	DCO	9/03	
CHECK	DM	9/03	

PERSONAL REVIEW — DATE — SENIOR PROJECT ENGR.
APPROVED — DATE — HIGHWAY BRIDGE ENGR.

COTTONWOOD STREET
OVER UTA AND 5300 SOUTH
BENT 1 - PLAN AND ELEVATION
PROJECT NUMBER * HPP-STP-2148(1)0

SALT LAKE COUNTY
C-923 DRG. NO.
SHT. 13 OF 34

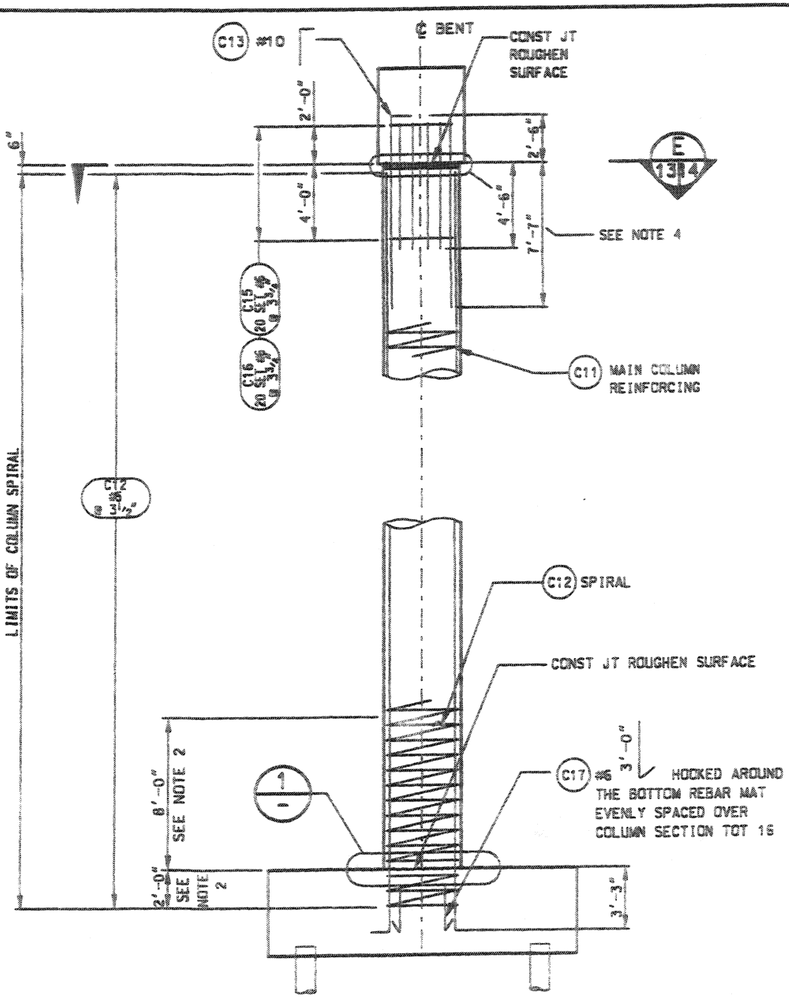

SECTION A 13/14

FOR FOOTING REINFORCEMENT SEE SHEET 9

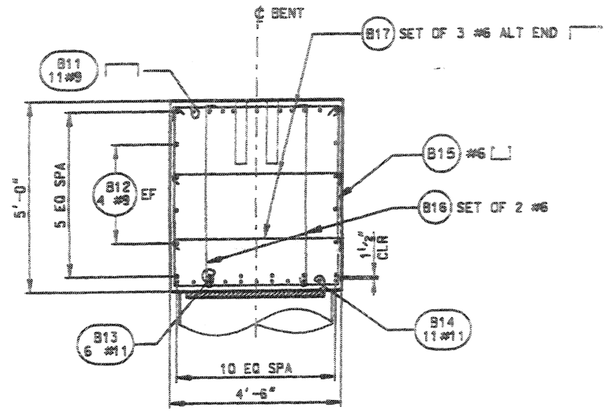

SECTION B 13/14

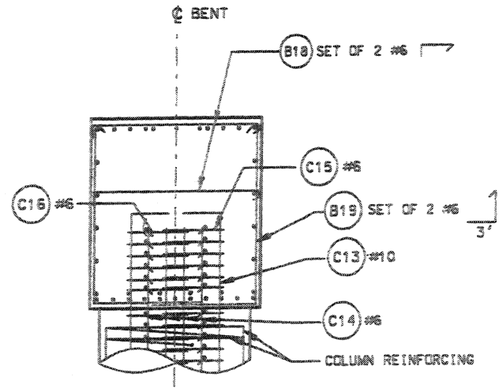

SECTION OF CAP AT COLUMN

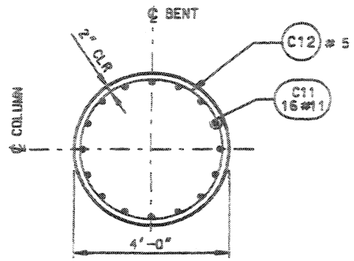

SECTION D 13/14

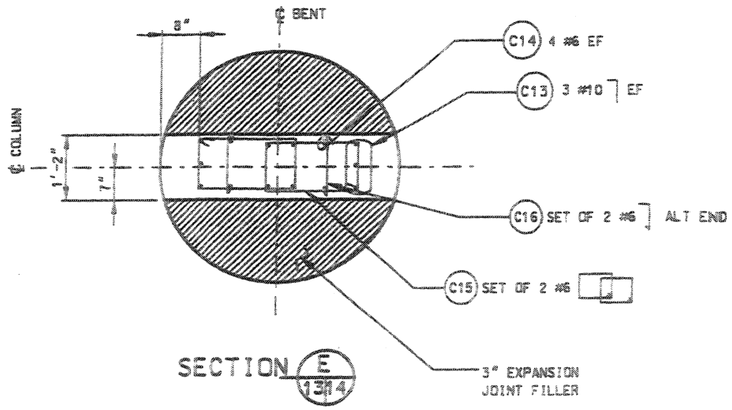

SECTION E 13/14

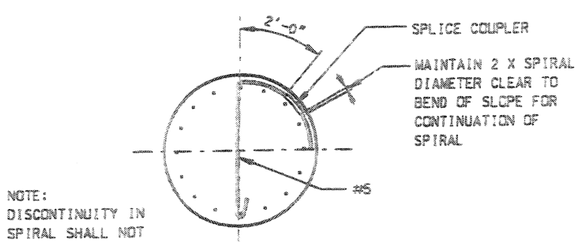

#5 SPIRAL DISCONTINUITY DETAIL 1/-

NOTES

1. ADJUST SPACING OF PILE CAP AND BENT CAP REINFORCING UP TO 4" TO ACCOMMODATE COLUMN REINFORCING. MAINTAIN AT LEAST THREE BAR DIAMETER SPACING.
2. NO LAP SPLICING OF LATERAL REINFORCING IS PERMITTED IN THIS REGION.
3. SPIRAL LAP SPLICES SHALL BE FULL STRENGTH (3'-6" MIN LAP). LAP SPLICES SHALL BE PERMITTED WHERE SHOWN ON SECTION A-A AND BE TERMINATED WITH A 135° HOOK AROUND VERTICAL REINFORCING.
4. ADJUST COLUMN HOOP AND TIE REINFORCING TO AVOID CONFLICT WITH BENT CAP REINFORCING.

RELEASE FOR CONSTRUCTION

NO.	DATE	REMARKS

MURRAY CITY CORPORATION
DEPARTMENT OF PUBLIC SERVICES — ENGINEERING DIVISION
4646 SO 500 W, MURRAY UT. 84123 - (801) 270-2400

DESIGN DCO 5/03 CHECK DM 9/03
DRAWN TAB 5/03 CHECK DCO 9/03
QUANT. DCO 5/03 CHECK DM 9/03

APPROVAL RECOMM. _____ DATE _____ SENIOR DESIGN ENGR.
APPROVED _____ DATE _____ DEPT ENGINEER ENGR.

COTTONWOOD STREET
OVER UTA AND 5300 SOUTH

BENT 1 -- DETAILS

PROJECT NUMBER * HPP-STP-2148(110)

SALT LAKE COUNTY

C-923 ORG. NO.

SHT. 14 OF 34

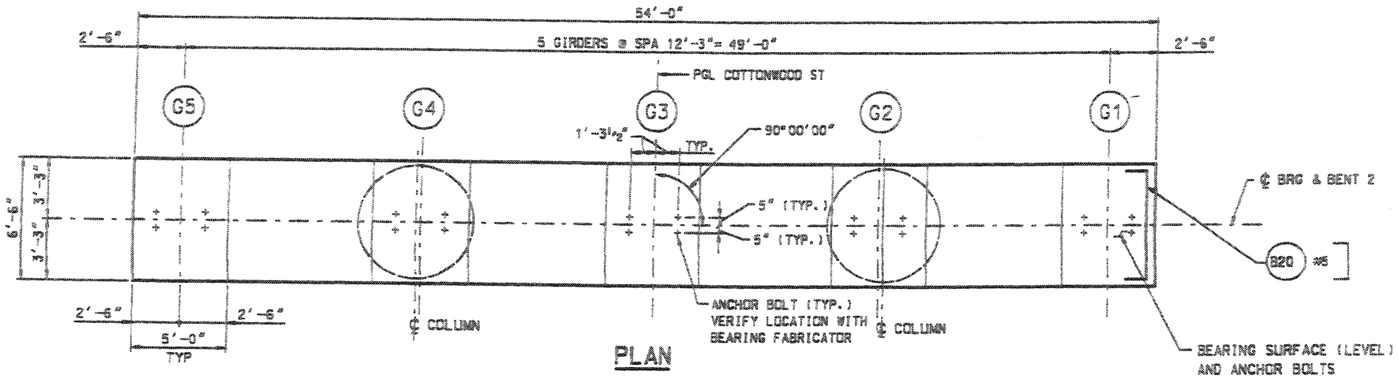

PLAN

BENT 2 SHOWN (BENT 4 SIMILAR)

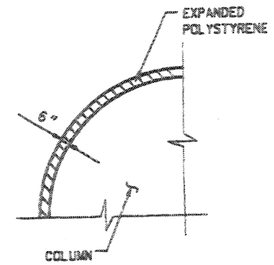

EXPANDED POLYSTYRENE SLEEVE DETAIL (1/—) (1/1517)

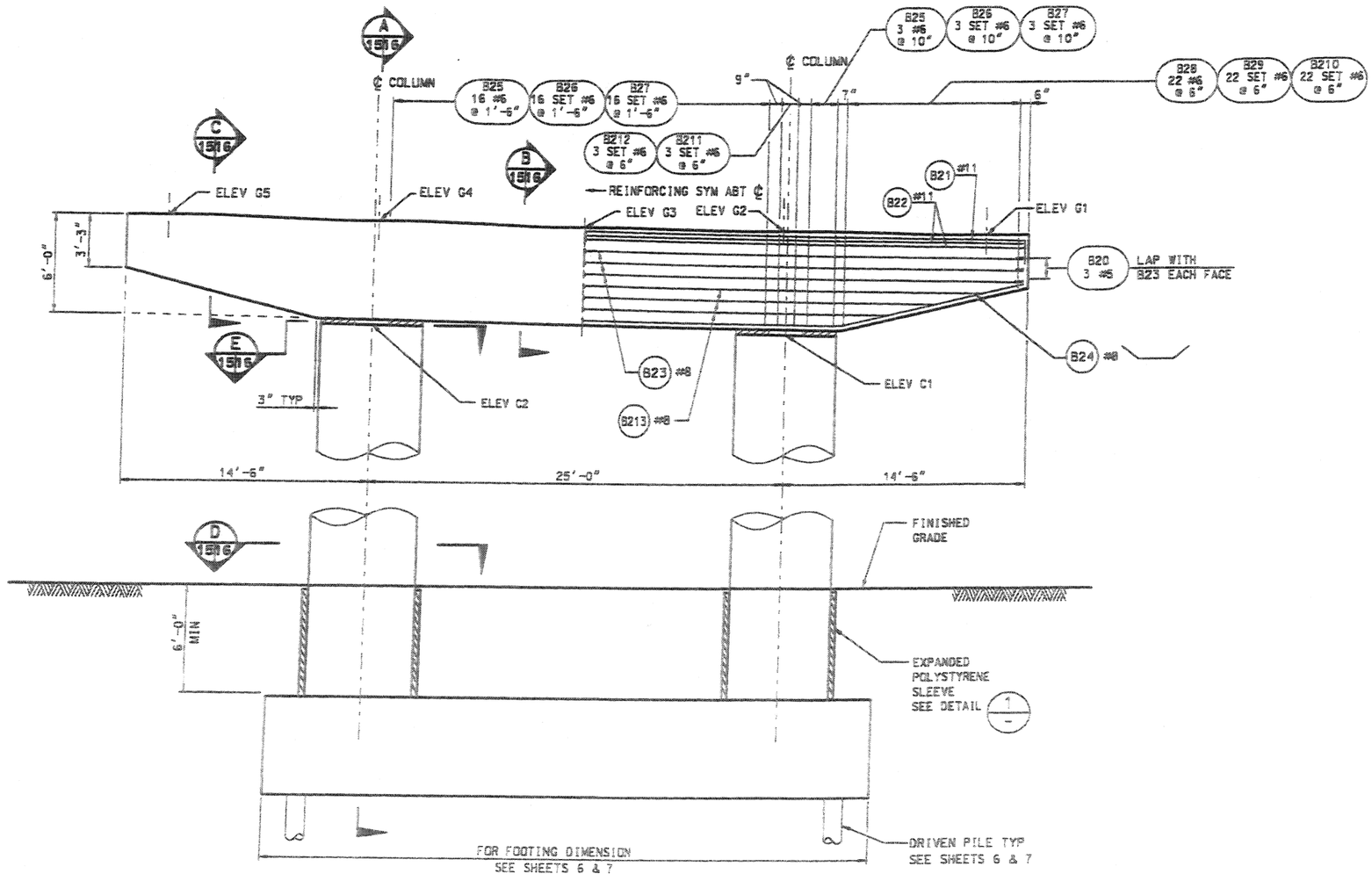

ELEVATION

(SHOWING CAP REINFORCING STEEL)

ELEVATIONS SCHEDULE		
LOCATION	BENT # 2	BENT # 4
G1	4344.67	4343.50
G2	4344.91	4343.74
G3	4345.16	4343.99
G4	4345.40	4344.19
G5	4345.65	4344.43
C1	4338.25	4337.09
C2	4339.23	4338.02

NOTES

1. TOP OF COLUMN ELEVATIONS ARE AT ℄ COLUMN AND BOTTOM OF BENT CAP.
2. PLACE STIRRUPS NORMAL TO ℄ BENT.
3. FOR SECTIONS, SEE SHEET 16.
4. FOR BOTTOM OF FOOTING ELEVATIONS, SEE SHEETS 6 & 7.
5. FOR FOOTING REINFORCING, SEE SHEET 10.
6. SEE SHEET 34 FOR FIXED BEARING AND ANCHOR BOLT DETAIL. ADJUST SPACING OF BENT CAP REINFORCING UP TO 4" TO ACCOMMODATE ANCHOR BOLTS. MAINTAIN AT LEAST THREE BAR DIAMETERS CLEAR SPACING BETWEEN BARS.
7. FINISH BEARING SURFACES 6 INCHES LARGER THAN THE MASONRY PLATE. PLACE CONCRETE HIGH AND RUB OR GRIND LEVEL AND FLAT TO THE ELEVATION SHOWN. NO GROUTING ALLOWED.

QUANTITIES STRUCTURAL CONCRETE 3A(AE)		
LOCATION	BENT 2	BENT 4
BENT CAP	70.6 CY	70.6 CY
COLUMN	66.6 CY	66.6 CY
TOTAL	137.2 CY	137.2 CY

RELEASE FOR CONSTRUCTION

NO.	DATE	REMARKS

MURRAY CITY CORPORATION
DEPARTMENT OF PUBLIC SERVICES — ENGINEERING DIVISION
4646 SO 500 W. MURRAY UT. 84123 - (801) 270-2400

DESIGN DCO 5/03	CHECK DM 9/03	
DRAWN TAB 5/03	CHECK DCO 9/03	
QUANTS. DCO 5/03	CHECK DM 9/03	
APPROVED: SENIOR DESIGN ENGR. DATE	APPROVED: CITY ENGINEER DATE	

COTTONWOOD STREET
OVER UTA AND 5300 SOUTH
BENTS 2 & 4 - PLAN & ELEV
PROJECT NUMBER * HPP-STP-2148(110)

SALT LAKE COUNTY
C-923
DRG. NO.
SHT. 15 OF 84

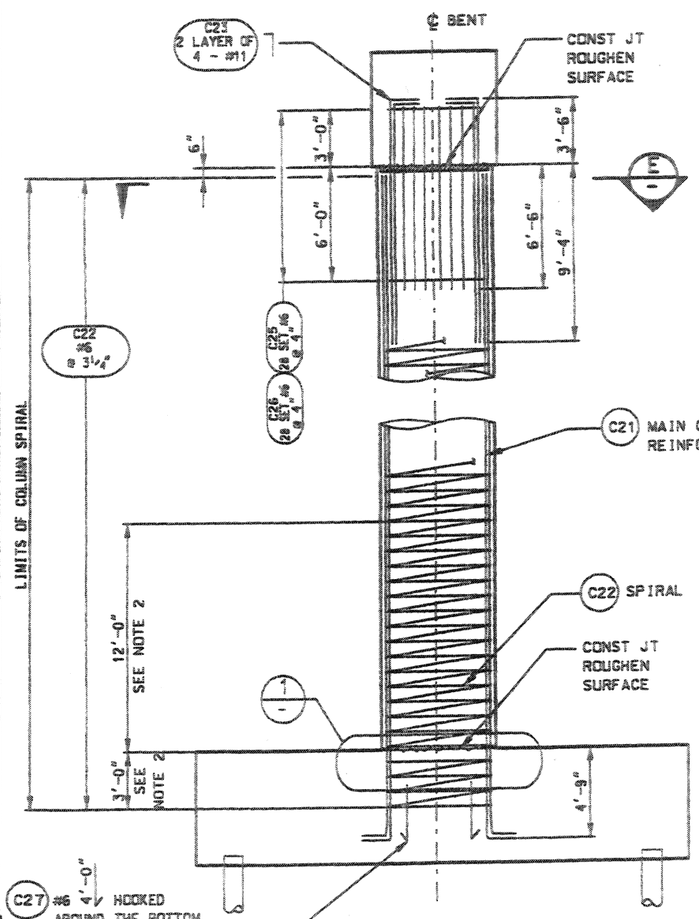

SECTION A 15|6

FOR FOOTING REINFORCEMENT SEE SHEET 20

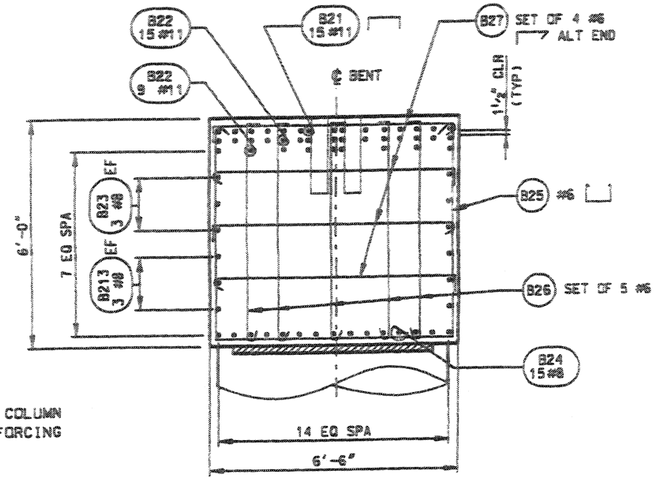

SECTION B 15|6

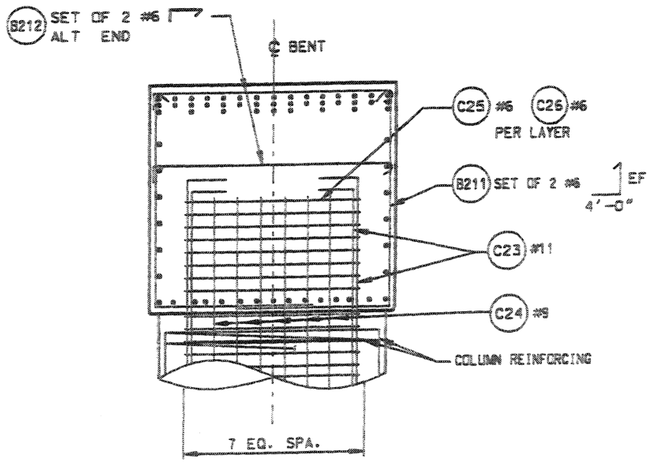

SECTION OF CAP AT COLUMN

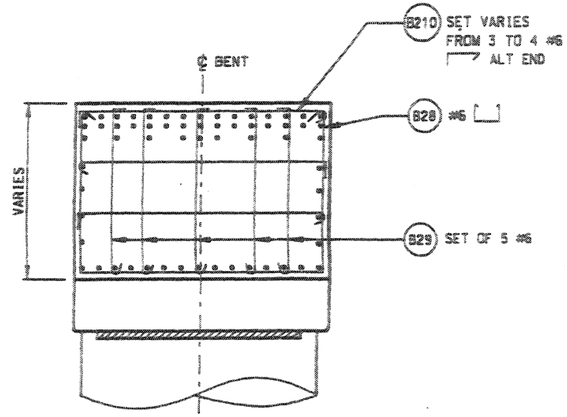

SECTION C 15|6

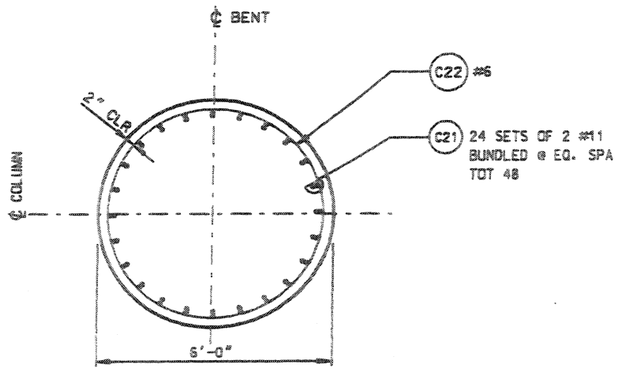

SECTION D 15|6

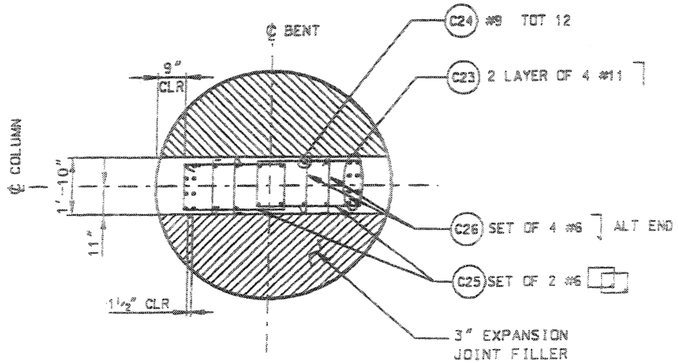

SECTION E 15|6

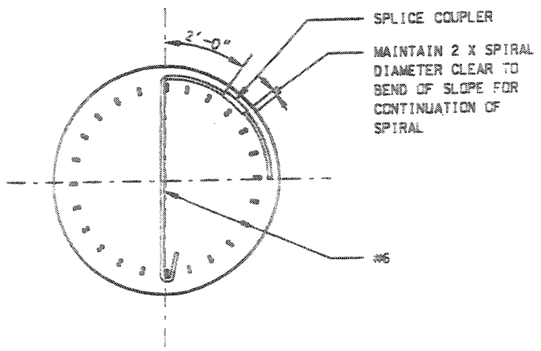

#6 SPIRAL DISCONTINUITY DETAIL 1/- 1 16|6

NOTES

1. ADJUST SPACING OF PILE CAP AND BENT CAP REINFORCING UP TO 4" TO ACCOMMODATE COLUMN REINFORCING. MAINTAIN AT LEAST THREE BAR DIAMETER SPACING
2. NO LAP SPLICING OF LATERAL REINFORCING IS PERMITTED IN THIS REGION.
3. SPIRAL LAP SPLICES SHALL BE FULL STRENGTH (3'-6" MIN LAP). LAP SPLICES SHALL BE PERMITTED WHERE SHOWN ON SECTION A-A AND BE TERMINATED WITH A 135° HOOK AROUND VERTICAL REINFORCING.
4. ADJUST HOOP AND TIE REINFORCING TO AVOID CONFLICT WITH BENT CAP REINFORCING.

RELEASE FOR CONSTRUCTION

NO.	DATE	REMARKS

MURRAY CITY CORPORATION
DEPARTMENT OF PUBLIC SERVICES — ENGINEERING DIVISION
4646 SO 500 W. MURRAY UT. 84123 — (801) 270-2400

DESIGN DCO 5/03	CHECK DM 9/03
DRAWN TAB 5/03	CHECK DCO 9/03
QUANT. DCO 5/03	CHECK DM 9/03

SENIOR DESIGN ENGR. DATE
APPROVAL RECOMM. DATE
CITY ENGR. DATE
APPROVED DATE

COTTONWOOD STREET
OVER UTA AND 5300 SOUTH

BENTS 2 & 4 - DETAILS

PROJECT NUMBER * HPP-STP-2148(110

SALT LAKE COUNTY

C-923 DRG. NO.

SHT. 16 OF 24

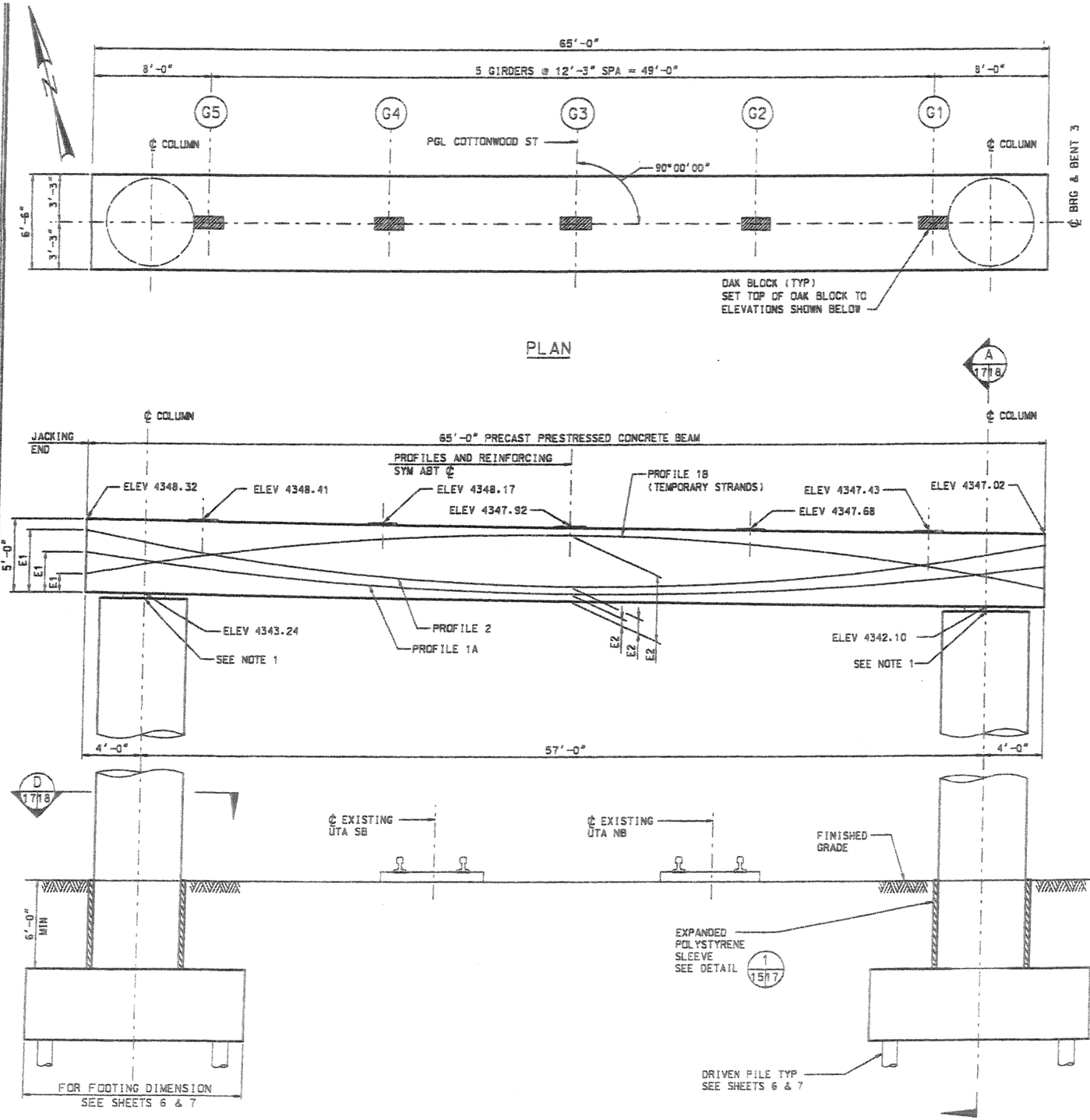

PLAN

ELEVATION

(SHOWN BENT CAP POST TENSION PROFILES)

NOTES

1. TOP OF COLUMN ELEVATIONS ARE AT ℄ COLUMN AND ℄ BENT. ADJUST THE ELEVATIONS TO FIT THE POT BEARING PER MANUFACTURER'S RECOMMENDATIONS.
2. PLACE STIRRUPS NORMAL TO ℄ BENT.
3. FOR SECTIONS. SEE SHEET 19.
4. FOR BOTTOM OF FOOTING ELEVATIONS. SEE SHEET 6.
5. FOR FOOTING REINFORCING. SEE SHEET 11.
6. FINISH TOP OF COLUMN BY PLACING CONCRETE HIGH AND RUBBING OR GRINDING LEVEL AND FLAT TO THE ELEVATION SHOWN. NO GROUTING ALLOWED.
7. 8- 2¼" DIAMETER ANCHOR BOLTS REQUIRED AT EACH COLUMN. SEE BEARING MANUFACTURER FOR LOCATION.

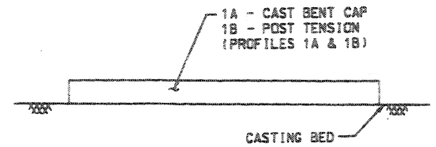

STAGE 1 - CAST AND POST-TENSION BENT CAP ON-SITE

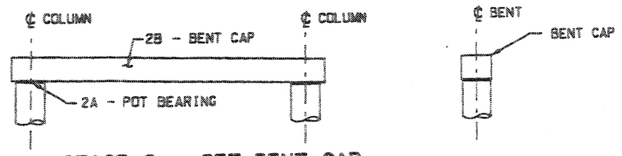

STAGE 2 - SET BENT CAP

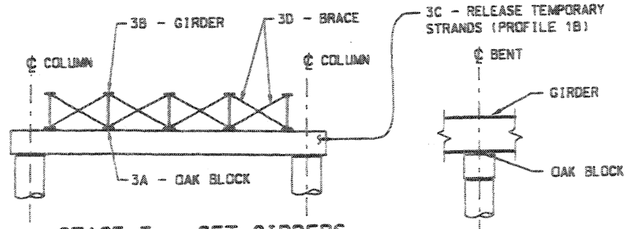

STAGE 3 - SET GIRDERS

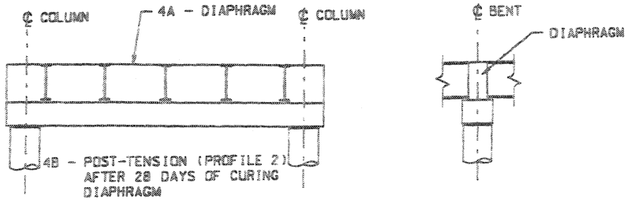

STAGE 4 - CAST DIAPHRAGM

CONSTRUCTION SEQUENCE

QUANTITIES STRUCTURAL CONCRETE 3A(AE)	
LOCATION	BENT 3
BENT CAP	78.2 CY
COLUMN	76.1 CY
TOTAL	154.3 CY

RELEASE FOR CONSTRUCTION

NO.	DATE	REMARKS

MURRAY CITY CORPORATION
DEPARTMENT OF PUBLIC SERVICES — ENGINEERING DIVISION
4646 SO 500 W. MURRAY UT. 84123 - (801) 270-2400

DESIGN DCO 5/03 | CHECK DM 9/03
DRAWN TAB 5/03 | CHECK DCO 9/03
QUANT. DCO 5/03 | CHECK DM 9/03

SENIOR DESIGN ENGR. — DATE
APPROVAL RECOMM. — DATE
APPROVED — DATE
CITY ENGR. — CITY BRIDGE ENGR.

COTTONWOOD STREET
OVER UTA AND 5300 SOUTH
BENT 3 - PLAN & ELEVATION
PROJECT NUMBER * HPP-STP-2148(1)0

SALT LAKE
COUNTY

C-923
DRG. NO.

SHT. 17 OF 54

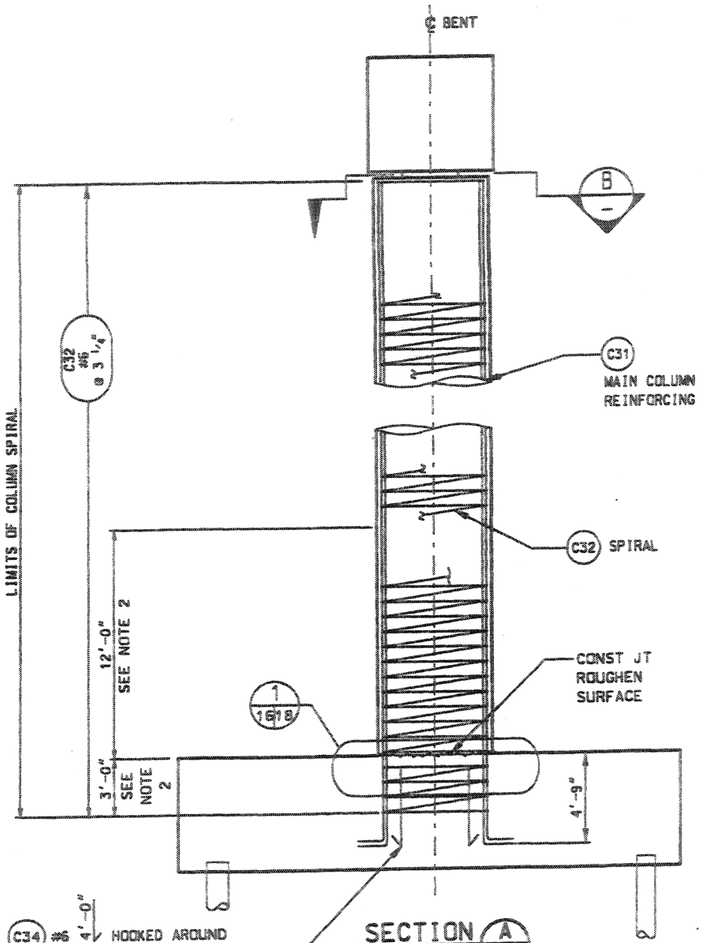

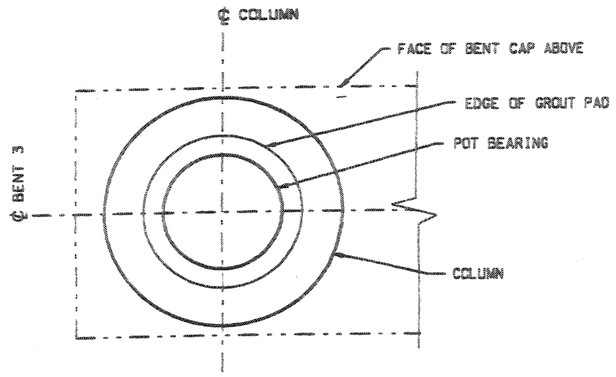

PLAN – FIX POT BEARING

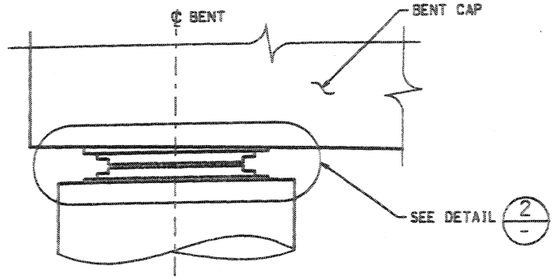

ELEVATION – FIX POT BEARING

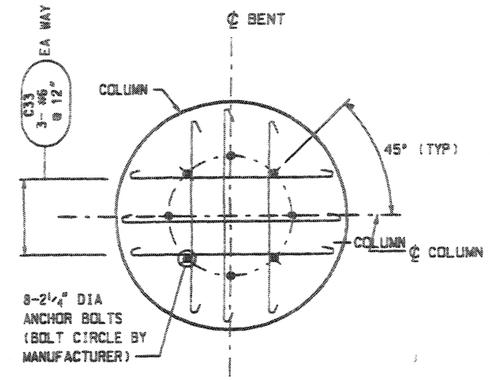

SECTION B – AT COLUMN TOP

NOTES

1. ADJUST SPACING OF PILE CAP AND BENT CAP REINFORCING UP TO 4" TO ACCOMMODATE COLUMN REINFORCING. MAINTAIN AT LEAST THREE BAR DIAMETER SPACING
2. NO LAP SPLICING OF LATERAL REINFORCING IS PERMITTED IN THIS REGION.
3. SPIRAL LAP SPLICES SHALL BE FULL STRENGTH (3'-6" MIN LAP). LAP SPLICES SHALL BE PERMITTED WHERE SHOWN ON SECTION A-A AND BE TERMINATED WITH A 135° HOOK AROUND VERTICAL REINFORCING. 8 – 2 1/4" DIA ANCHOR BOLTS
4. ADJUST HOOP AND TIE REINFORCING TO AVOID CONFLICT WITH BENT CAP REINFORCING.
5. CONTRACTOR SHALL DESIGN FIXED POT BEARING FOR THE CRITERIA LISTED BELOW:

   AXIAL LOAD = 2137 KIPS
   SHEAR LOAD = 467 KIPS
   HORIZONTAL MOVEMENT = 0.25 INCH
   ROTATION = 0.02 RADIAN

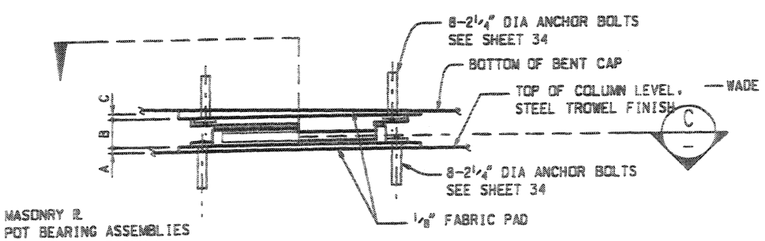

DETAIL 2

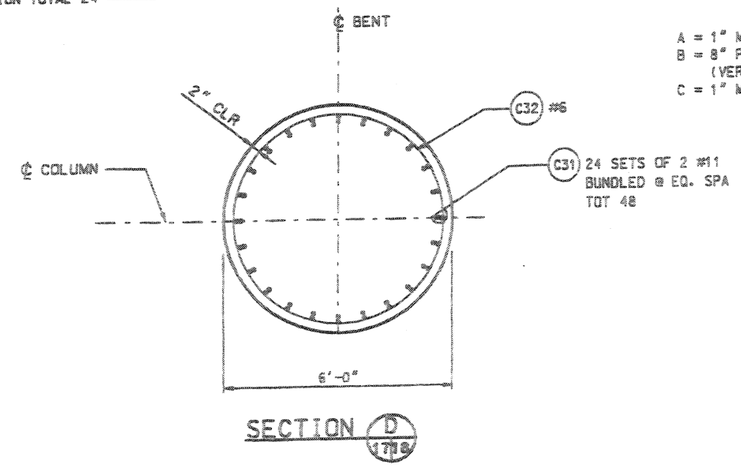

SECTION D 17 1/8

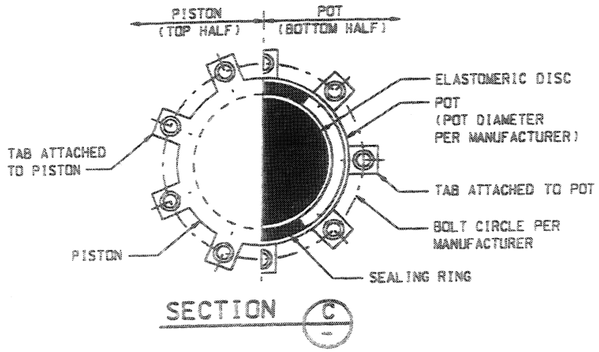

SECTION C

RELEASE FOR CONSTRUCTION

NO.	DATE	REMARKS

MURRAY CITY CORPORATION
DEPARTMENT OF PUBLIC SERVICES — ENGINEERING DIVISION
4646 SO 500 W, MURRAY UT, 84123 – (801) 270-2400

DESIGN DCO 5/03 CHECK DM 9/03
DRAWN TAB 5/03 CHECK DCO 9/03
QUANT. DCO 5/03 CHECK DM 9/03

SENIOR DESIGN ENGR. — DATE
APPROVAL RECOMM. — DATE
APPROVED — DATE
CITY ENGINEER — CITY BRIDGE ENGR.

COTTONWOOD STREET
OVER UTA AND 5300 SOUTH

BENT 3 – COLUMN DETAILS

PROJECT NUMBER * HPP-STP-2148(110)

SALT LAKE COUNTY

C-923
DRG. NO.

SHT. 18 OF 54

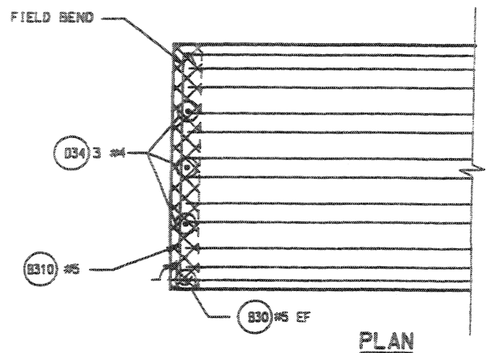

PLAN

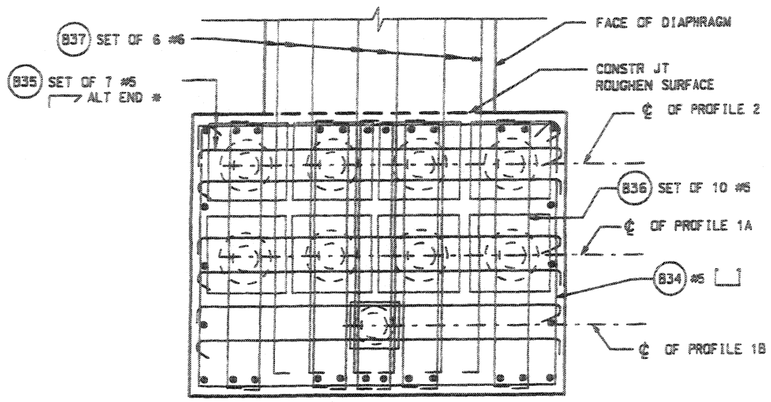

SECTION E
AT END

* WHEN DUCT PROFILE ARE CONVERGING SOME INDIVIDUAL BARS MAY BE DROPPED TO AVOID CONFLICT

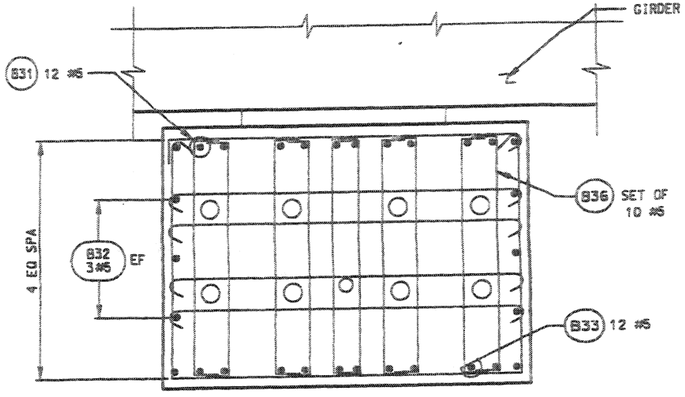

SECTION F
AT GIRDER

STRESSING SEQUENCE

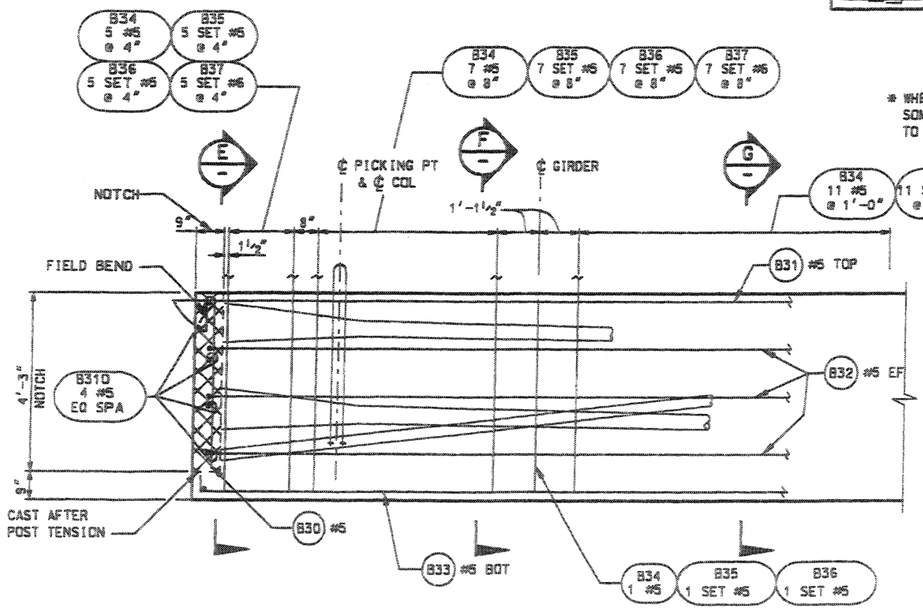

ELEVATION

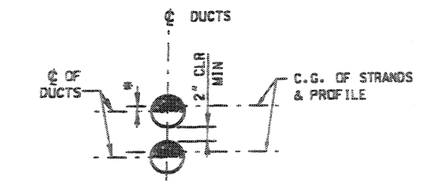

STRAND LOCATION DETAIL
TENDON IN SAG CURVE
* PER MANUFACTURE SPECIFICATIONS

POST-TENSIONING TABLE

PROFILE NO.	NO. OF DUCTS	f'c KSI	f'ci KSI	NO. OF STRANDS	PRESTRESSING LOAD KIPS JACKING	PRESTRESSING LOAD KIPS AFTER SEATING	PRESTRESS LOSS KSI	E1 IN	E2 IN
1A	4	4	3.6	102	4470	3837	28	33	6
1B	1	4	3.6	26	1140	963	28	15	54
2	4	4	3.6	96	4180	3527	20	51	12

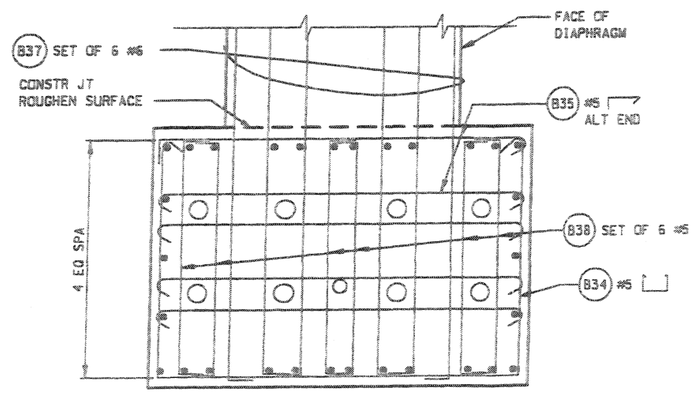

SECTION G
BETWEEN GIRDERS

NOTES

1. PLAN LENGTH SHALL BE INCREASED AS NECESSARY TO COMPENSATE FOR SHORTENING DUE TO PRESTRESS AND SHRINKAGE.
2. LIFTING BARS SHALL BE 1¾" DIAMETER HIGH STRENGTH THREADED BARS (AASHTO M275, GRADE 150 MINIMUM). LIFTING HARDWARE THAT CONNECTS TO THREADED BARS SHALL BE DESIGNED AND DETAILED BY THE CONTRACTOR. LIFTING FORCES ON THREAD BARS SHALL BE VERTICAL ONLY AND WITHIN 10 DEGREES OF PERPENDICULAR TO A LINE BETWEEN PICK POINTS. CONTRACTOR SHALL SUBMIT CALCULATIONS FOR APPROVAL BY THE ENGINEER IF LIFTING FORCES ARE TO BE OTHERWISE.
3. THE MINIMUM PRESTRESSING LOAD AFTER SEATING AND THE MINIMUM NUMBER OF PRESTRESSING STRANDS FOR EACH PROFILE SHALL BE AS SHOWN IN POST-TENSIONING TABLE.
4. THE DESIGN IS BASED ON 0.6 INCH DIAMETER LOW RELAXATION STRANDS WITH A JACKING LOAD FOR EACH PROFILE AS SHOWN IN POST-TENSIONING TABLE, AN ANCHOR SET OF 3/8 INCH, CURVATURE FRICTION COEFFICIENT OF $\mu = 0.20$, AND A WOBBLE FRICTION COEFFICIENT OF $k = 0.0002/ft$. THE ACTUAL ANCHOR SET USED BY THE CONTRACTOR SHALL BE SPECIFIED IN THE SHOP PLANS AND INCLUDED IN THE TRANSFER FORCE CALCULATIONS.
5. THE DESIGN IS BASED ON THE ESTIMATED PRESTRESS LOSS OF POST-TENSIONING STRANDS SHOWN IN POST-TENSIONING TABLE DUE TO STEEL RELAXATION, ELASTIC SHORTENING, CREEP, AND SHRINKAGE OF CONCRETE.
6. THE CONTRACTOR SHALL SUBMIT THE STRESSING SEQUENCE AND ELONGATION CALCULATIONS TO THE ENGINEER FOR APPROVAL. ALL LOSSES DUE TO TENDON VERTICAL AND HORIZONTAL CURVATURE MUST BE INCLUDED IN ELONGATION CALCULATIONS.
   A. THE PRESTRESSING FORCE SHALL BE DISTRIBUTED WITH AN APPROXIMATELY EQUAL AMOUNT IN EACH TENDON AND SHALL BE PLACED SYMMETRICALLY ABOUT THE CENTERLINE OF THE BEAM.
   B. NO MORE THAN ONE-HALF OF THE PRESTRESSING FORCE IN ANY DUCT MAY BE STRESSED BEFORE AN EQUAL FORCE IS STRESSED IN THE ADJACENT DUCTS. AT NO TIME DURING STRESSING OPERATION WILL MORE THAN ONE-FOURTH OF THE TOTAL PRESTRESSING FORCE IS APPLIED ECCENTRICALLY ABOUT THE CENTERLINE OF BEAM.
7. THE MAXIMUM OUTSIDE DIAMETER OF THE DUCT SHALL BE 4½ INCHES. THE AREA OF THE DUCT SHALL BE AT LEAST 2.5 TIMES THE NET AREA OF THE PRESTRESSING STEEL IN THE DUCT.
8. ALL TENDONS SHALL BE STRESSED FROM THE WEST END OF THE BEAM.
9. EXTRA CAUTION SHALL BE EXERCISED IN HANDLING AND PLACING THE BEAM.
10. THE TOP SURFACE OF THE BEAM (WHERE THE DIAPHRAGM WILL BE CASTED LATER) SHALL BE ROUGHENED.
11. FORMS FOR POT BEARING ANCHOR BOLTS SHALL BE CONSTRUCTED AND FASTENED IN SUCH A MANNER AS NOT TO CAUSE DAMAGE TO THE BEAM DURING STRESSING OPERATION.

RELEASE FOR CONSTRUCTION
REMARKS | NO. | DATE

MURRAY CITY
DEPARTMENT OF PUBLIC SERVICES — ENGINEERING DIVISION
4646 SO 500 W. MURRAY UT. (801) 270-2400

DESIGN DCO 5/03 | CHECK DM 9/03
DRAWN TAB 5/03 | CHECK DCO 9/03
QUANT. DCO 5/03 | CHECK DM 9/03

APPROVAL RECOMMD. — SENIOR PROJECT ENGR. — DATE
APPROVED — UDOT BRIDGE ENGR. — DATE

COTTONWOOD STREET
OVER UTA AND 5300 SOUTH
BENT 3 - BENT CAP DETAILS
PROJECT NUMBER * HPP-STP-2148(110)

SALT LAKE COUNTY
C-923 DRG. NO.
SHT. 19 OF 54

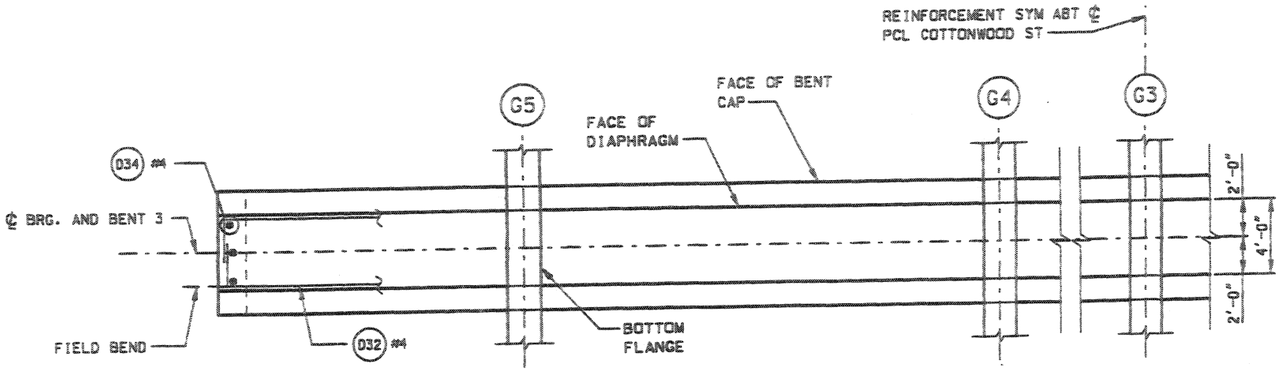

PLAN

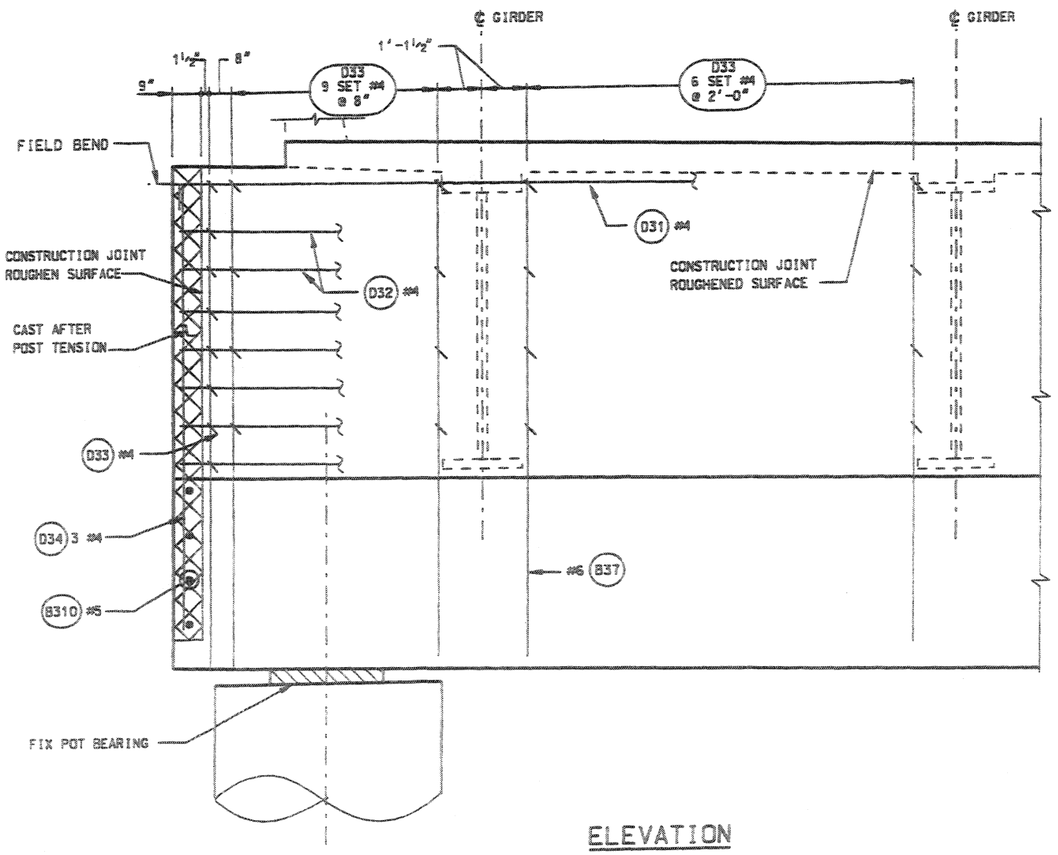

ELEVATION

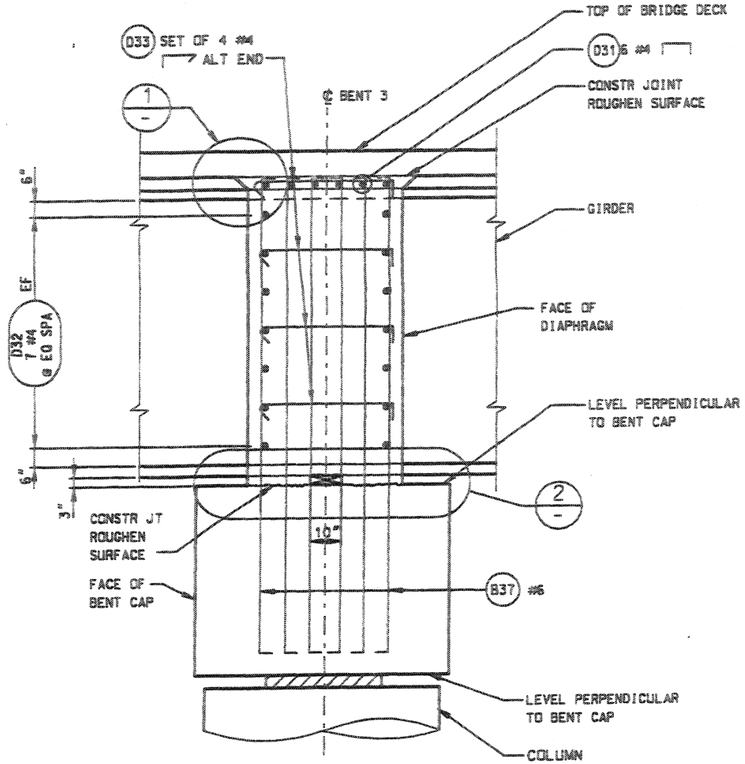

TYPICAL SECTION

BENT CAP REINFORCEMENT NOT SHOWN EXCEPT FOR B37 FOR CLARITY

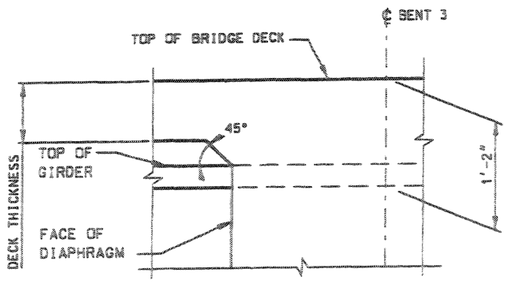

DETAIL 1

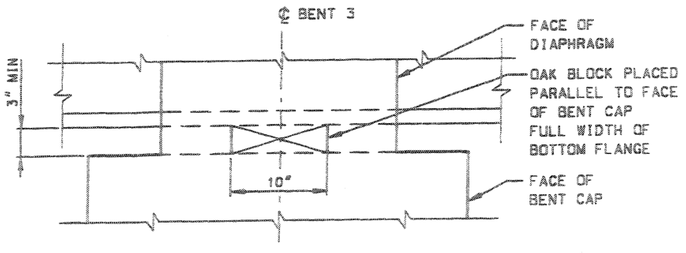

OAK BLOCK DETAIL 2

QUANTITIES
STRUCTURAL CONCRETE 3A(AE)

DIAPHRAGM BENT 3	76.9 CY

RELEASE FOR CONSTRUCTION

NO.	DATE	REMARKS

MURRAY CITY CORPORATION
DEPARTMENT OF PUBLIC SERVICES — ENGINEERING DIVISION
4646 SO 500 W. MURRAY UT. 84123 - (801) 270-2400

DESIGN DCO 5/03 CHECK DM 9/03
DRAWN TAB 5/03 CHECK DCO 9/03
QUANTY. DCO 5/03 CHECK DM 9/03

APPROVAL RECOMM. — SENIOR DESIGN ENGR. — DATE
APPROVED — LOCUT BRIDGE ENGR. — DATE

COTTONWOOD STREET
OVER UTA AND 5300 SOUTH
BENT 3 - DIAPHRAGM DETAILS
PROJECT NUMBER * HPP-STP-2148(1)0

SALT LAKE COUNTY
C-923 DRG. NO.
SHT. 20 OF 34

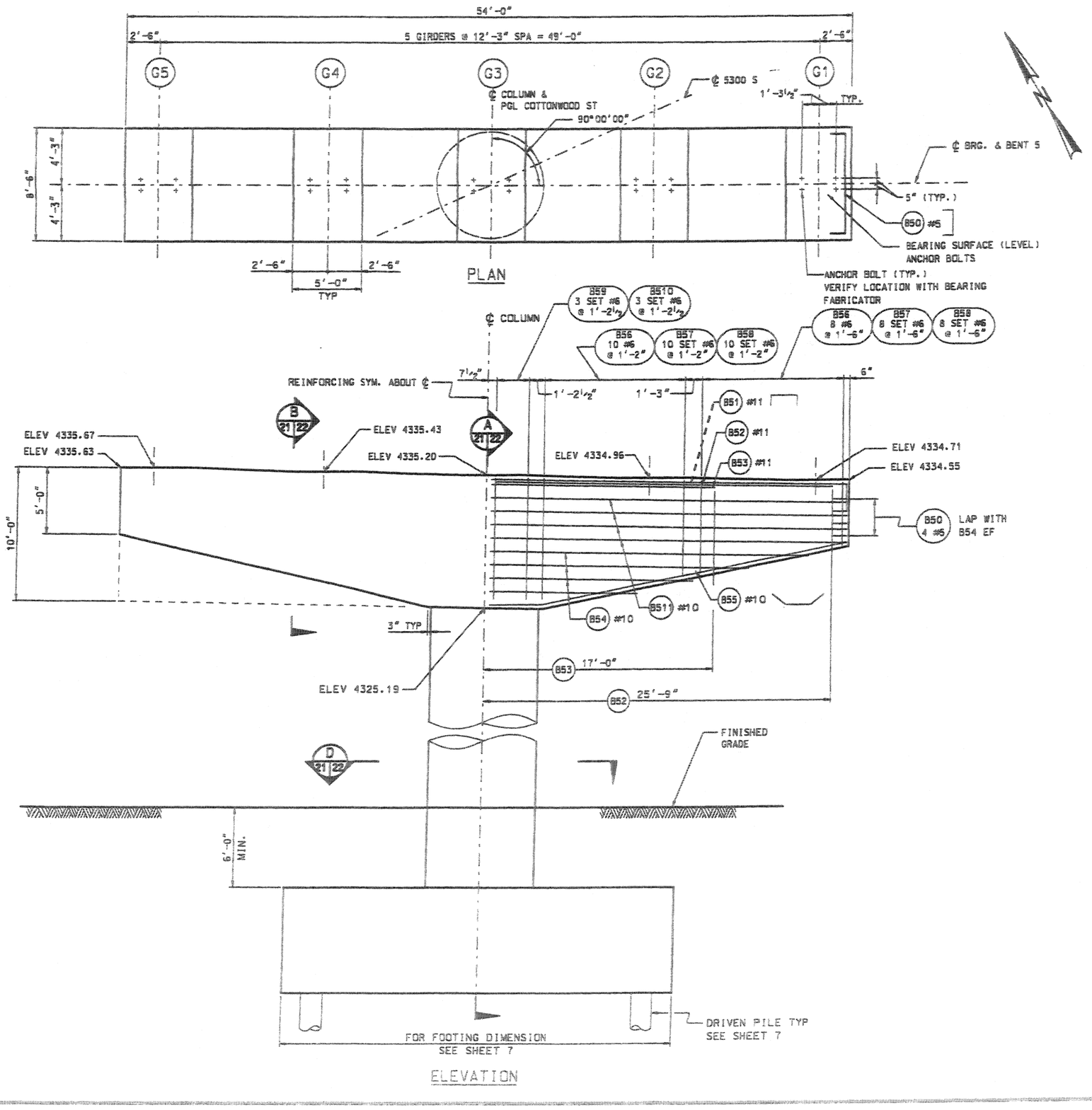

NOTES

1. TOP OF COLUMN ELEVATIONS ARE AT ℄ COLUMN AND ℄ BENT.
2. PLACE STIRRUPS NORMAL TO ℄ BENT.
3. FOR SECTIONS, SEE SHEET 22.
4. FOR BOTTOM OF FOOTING ELEVATIONS, SEE SHEET 7.
5. FOR FOOTING REINFORCING, SEE SHEET 12.
6. SEE SHEET 34 FOR FIXED BEARING AND ANCHOR BOLT DETAIL. ADJUST SPACING OF BENT CAP REINFORCING UP TO 4" TO ACCOMMODATE ANCHOR BOLTS. MAINTAIN AT LEAST THREE BAR DIAMETERS CLEAR SPACING BETWEEN BARS.
7. FINISH BEARING SURFACES 6 INCHES LARGER THAN THE MASONRY PLATE. PLACE CONCRETE HIGH AND RUB OR GRIND LEVEL AND FLAT TO THE ELEVATION SHOWN. NO GROUTING ALLOWED.

QUANTITIES STRUCTURAL CONCRETE 3A(AE)	
LOCATION	BENT 5
BENT CAP	134.2 CY
COLUMN	91.4 CY
TOTAL	225.6 CY

RELEASE FOR CONSTRUCTION

NO.	DATE	REMARKS

MURRAY CITY CORPORATION
DEPARTMENT OF PUBLIC SERVICES --- ENGINEERING DIVISION
4646 SO 500 W. MURRAY UT. 84123 - (801) 270-2400

DESIGN DCO 5/03 | CHECK DM 9/03
DRAWN TAB 5/03 | CHECK DCO 9/03
QUANT. DCO 5/03 | CHECK DM 9/03

APPROVAL RECOMMD. _____ DATE _____ SENIOR DESIGN ENGR.
APPROVED _____ DATE _____ UDOT ENGR. DESN.

COTTONWOOD STREET
OVER UTA AND 5300 SOUTH
BENT 5 -- PLAN & ELEVATIONS
PROJECT NUMBER * HPP-STP-2148(1)0

SALT LAKE COUNTY
C-923 ORG. NO.
SHT. 21 OF 54

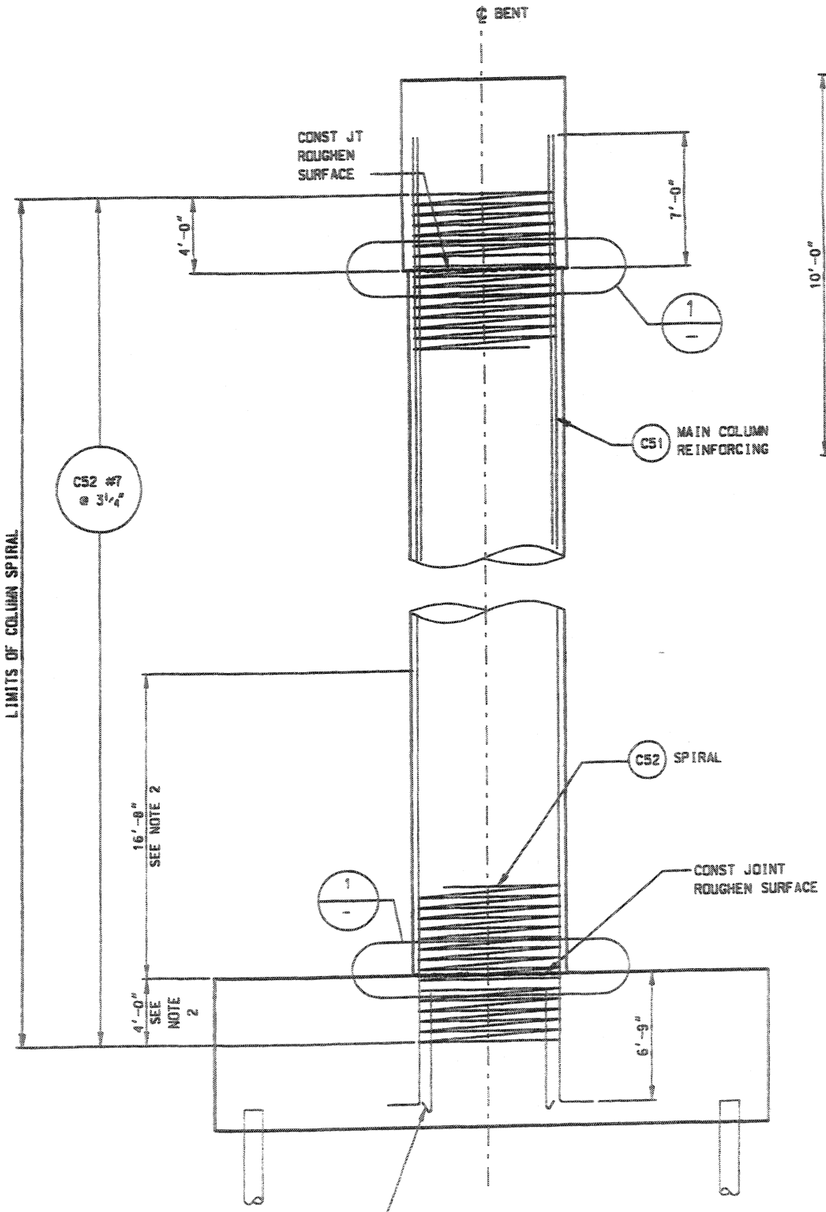

SECTION A 21|22

FOR FOOTING REINFORCEMENT SEE SHEET 12.

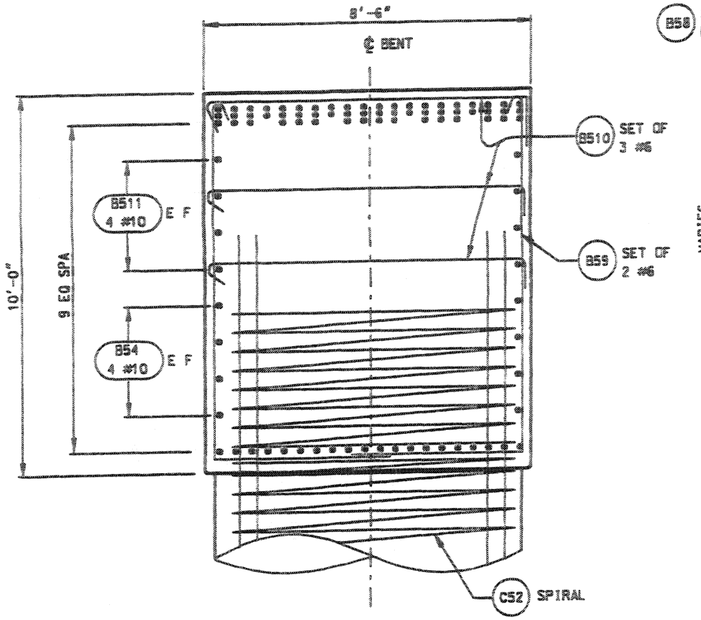

SECTION OF CAP AT COLUMN

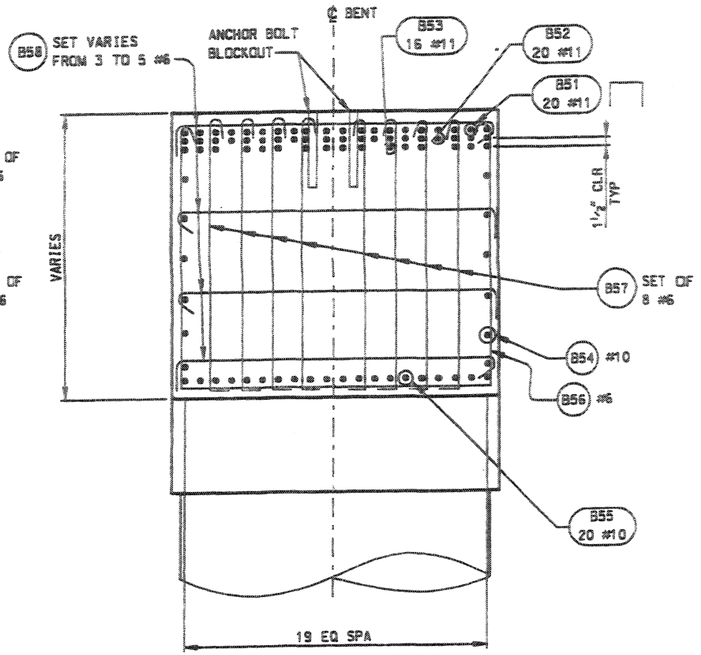

SECTION B 21|22

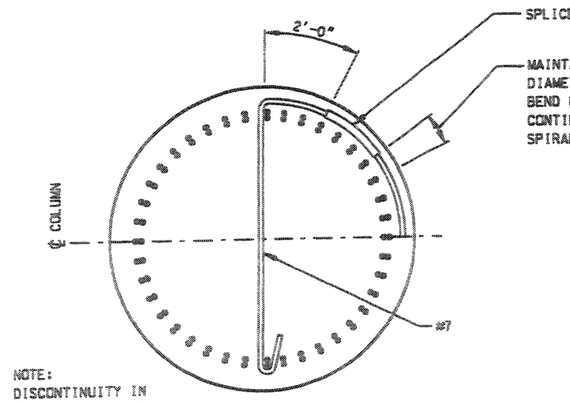

NOTE: DISCONTINUITY IN SPIRAL SHALL NOT EXCEED 7"

#7 SPIRAL DISCONTINUITY DETAIL 1/—

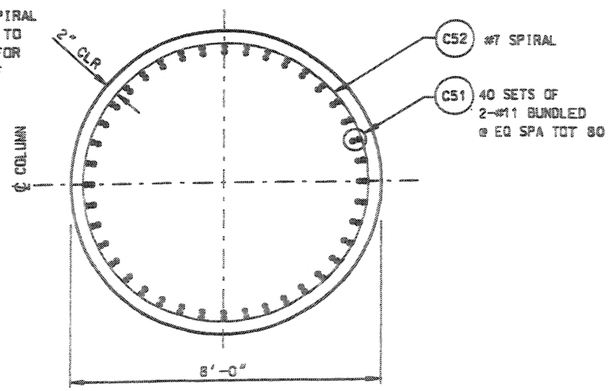

SECTION D 21|22

NOTES

1. ADJUST SPACING OF PILE CAP AND BENT CAP REINFORCING UP TO 4" TO ACCOMMODATE COLUMN REINFORCING. MAINTAIN AT LEAST THREE BAR DIAMETER SPACING.
2. NO LAP SPLICING OF LATERAL REINFORCING IS PERMITTED IN THIS REGION.
3. SPIRAL LAP SPLICES SHALL BE FULL STRENGTH (3'-6" MIN LAP). LAP SPLICES SHALL BE PERMITTED WHERE SHOWN ON SECTION A-A AND BE TERMINATED WITH A 135° HOOK AROUND VERTICAL REINFORCING.
4. ADJUST HOOP AND TIE REINFORCING TO AVOID CONFLICT WITH BENT CAP REINFORCING.

RELEASE FOR CONSTRUCTION

NO.	DATE	REMARKS

MURRAY CITY CORPORATION
DEPARTMENT OF PUBLIC SERVICES — ENGINEERING DIVISION
4646 SO 500 W. MURRAY UT. 84123 — (801) 270-2400

DESIGN DCD 5/03 CHECK DM 9/03
DRAWN TAB 5/03 CHECK DCD 9/03
QUANT. DCD 5/03 CHECK DM 9/03

APPROVAL RECOMM. DATE SENIOR DESIGN ENGR.
APPROVED DATE LIGHT BRIDGE ENGR.

COTTONWOOD STREET
OVER UTA AND 5300 SOUTH
BENT 5 - DETAILS
PROJECT NUMBER * HPP-STP-2148(110)

SALT LAKE COUNTY
C-923 ORG. NO.
SHT. 22 OF 54

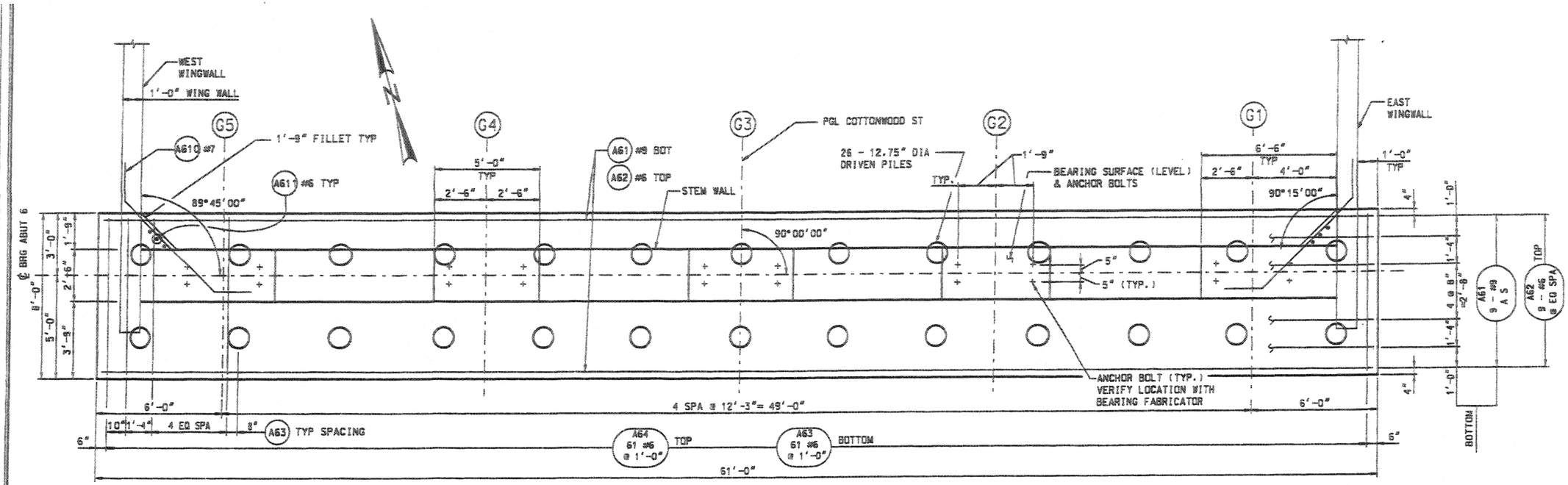

PLAN–ABUTMENT 6

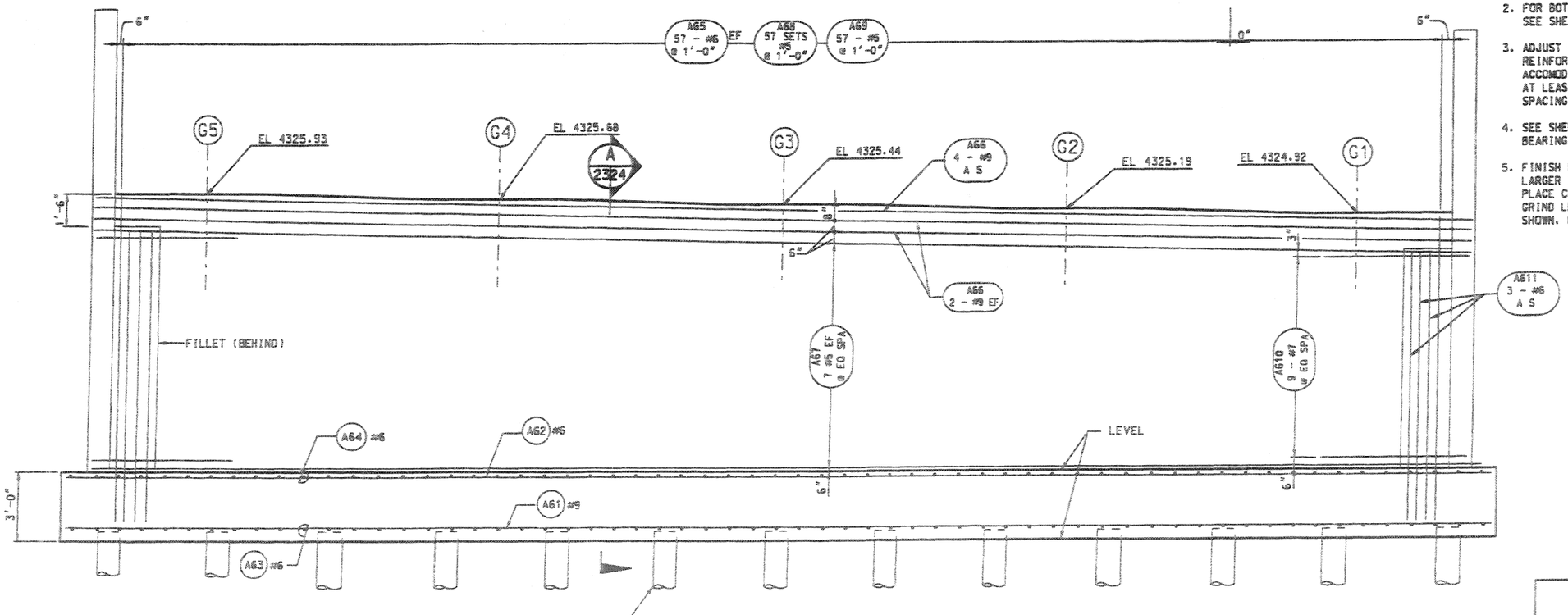

ELEVATION–ABUTMENT 6

ABUTMENT NOTES

1. FOR SECTION, SEE SHEET 24.
2. FOR BOTTOM OF FOOTING ELEVATIONS, SEE SHEET 7.
3. ADJUST SPACING OF STEM WALL REINFORCING UP TO 4" TO ACCOMODATE ANCHOR BOLTS. MAINTAIN AT LEAST THREE BAR DIAMETERS CLEAR SPACING BETWEEN BARS.
4. SEE SHEET 33 FOR EXPANSION BEARING AND ANCHOR BOLT DETAILS.
5. FINISH BEARING SURFACES 6 INCHES LARGER THAN THE MASONRY PLATE. PLACE CONCRETE HIGH AND RUB OR GRIND LEVEL AND FLAT TO THE ELEVATION SHOWN. NO GROUTING ALLOWED.

QUANTITIES
STRUCTURAL CONCRETE

LOCATION	ABUTMENT 6
FOOTING, AA(AE)	54.2 CY
STEM WALL, 3AC(AE)	43.9 CY

RELEASE FOR CONSTRUCTION

NO.	DATE	REMARKS

MURRAY CITY CORPORATION
DEPARTMENT OF PUBLIC SERVICES — ENGINEERING DIVISION
4646 SO 500 W. MURRAY UT. 84123 – (801) 270-2400

DESIGN KTF 5/03	CHECK DCO 9/03	APPROVAL RECOMM.	SENIOR DESIGN ENGR. DATE
DRAWN TAB 5/03	CHECK DCO 9/03		
QUANT. KTF 5/03	CHECK DCO 9/03	APPROVED	DEPT BRIDGE ENGR. DATE

COTTONWOOD STREET
OVER UTA AND 5300 SOUTH
ABUTMENT 6
PROJECT NUMBER * HPP-STP-2148(110)

SALT LAKE COUNTY
C-923 ORG. NO.
SHT. 23 OF 84

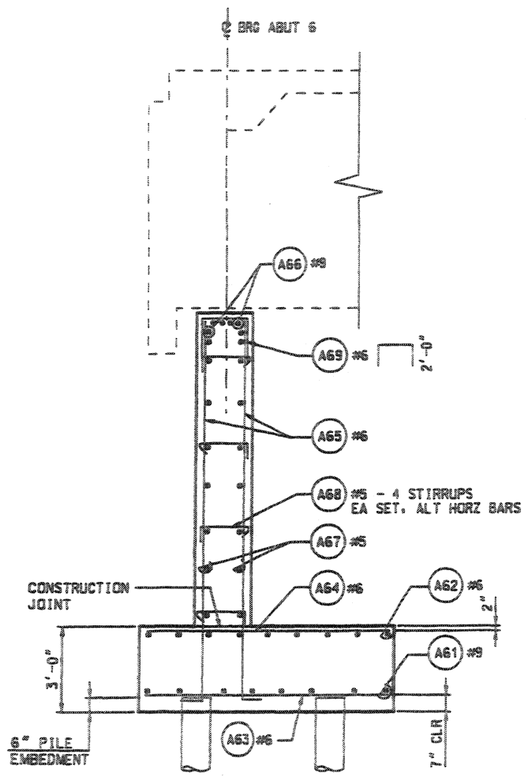

SECTION A (2324)

CONC DIAPHRAGM SHOWN IN DASHED LINE

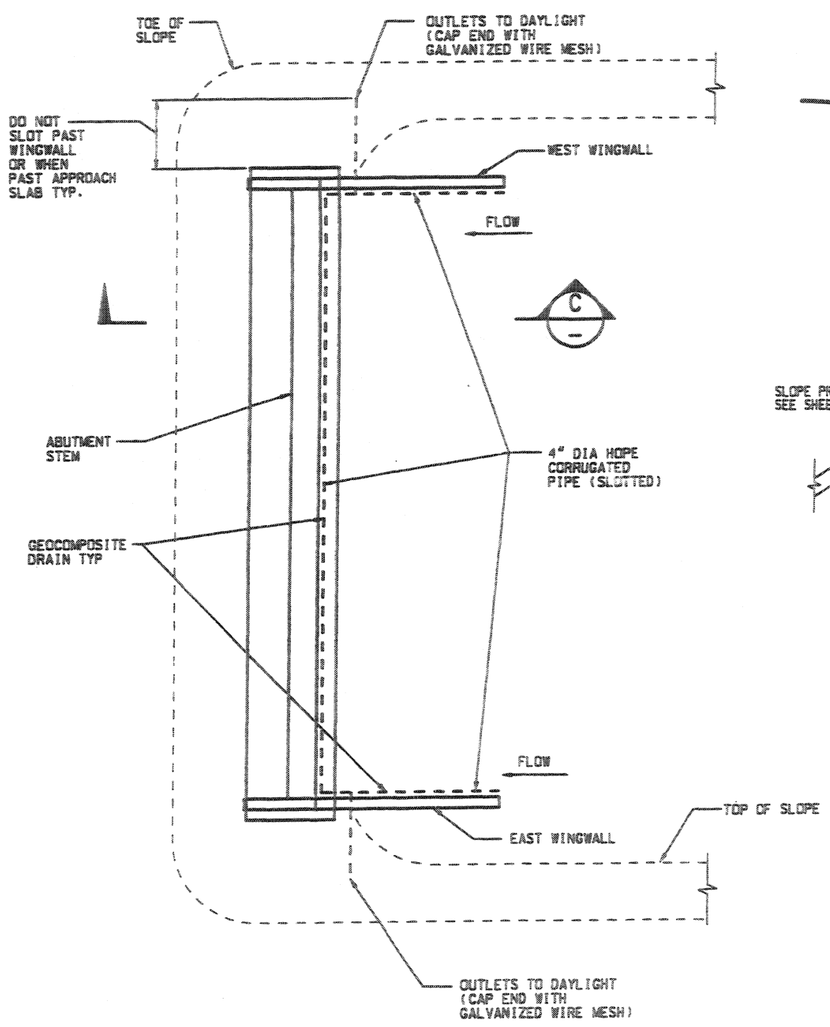

ABUTMENT 6 - DRAINAGE PLAN

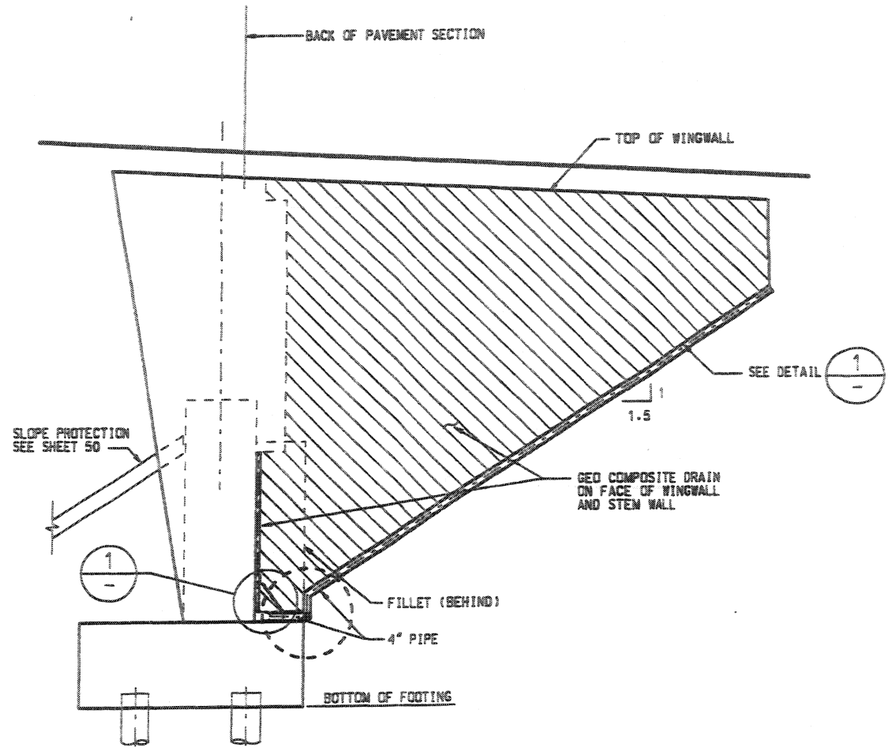

SECTION C

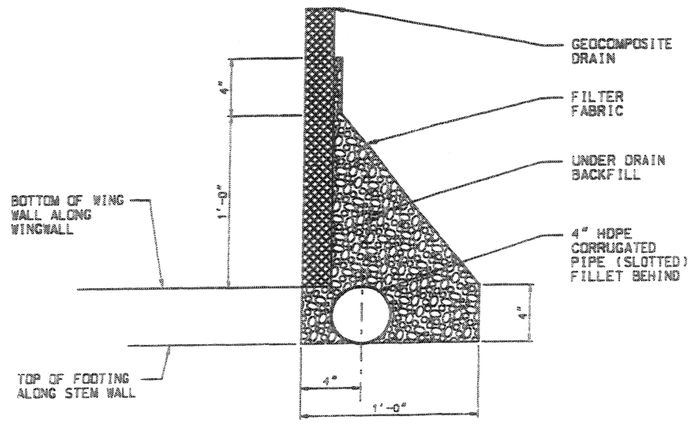

DETAIL 1

RELEASE FOR CONSTRUCTION

NO.	DATE	REMARKS

MURRAY CITY CORPORATION
DEPARTMENT OF PUBLIC SERVICES — ENGINEERING DIVISION
4646 SO 500 W. MURRAY UT. 84123 - (801) 270-2400

APPROVAL RECOMMD. — DATE — SENIOR DESIGN ENGR.
APPROVED — DATE — UDOT BRIDGE ENGR.

DESIGN KTF 5/03 — CHECK DCO 9/03
DRAWN TAB 5/03 — CHECK DCO 9/03
QUANT. KTF 5/03 — CHECK DCO 9/03

COTTONWOOD STREET
OVER UTA AND 5300 SOUTH

ABUTMENT DETAILS

PROJECT NUMBER * HPP-STP-2148(1)0

SALT LAKE COUNTY

C-923
DRG. NO.

SHT. 24 OF 84

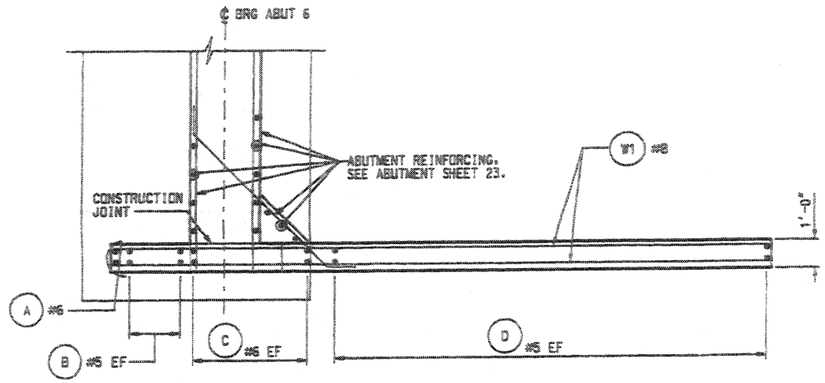

PLAN - WINGWALL

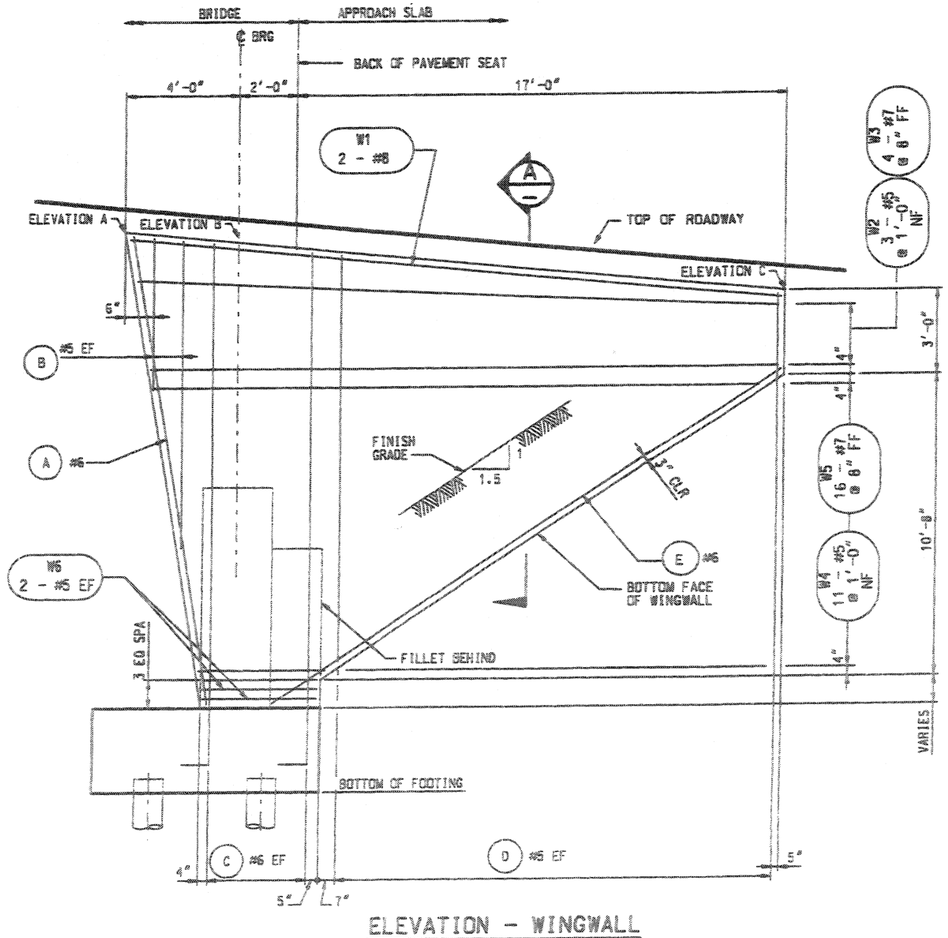

ELEVATION - WINGWALL

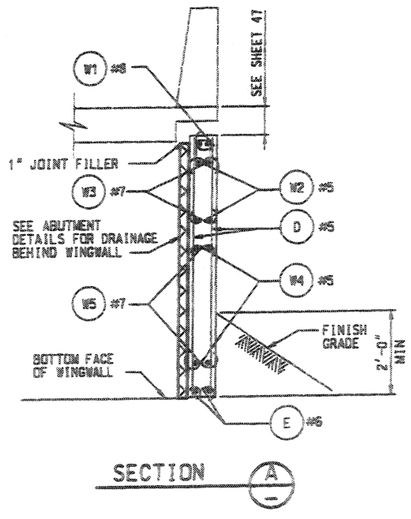

SECTION A

WINGWALL REBAR		
BAR	EAST WING	WEST WING
A	WE1 2 - #6	WW1 2 - #6
B	WE2 2 - #5 @ 1'-0"	WW2 2 - #5 @ 1'-0"
C	WE3 8 - #6 @ 6"	WW3 8 - #6 @ 6"
D	WE4 16 - #5 @ 1'-0"	WW4 16 - #5 @ 1'-0"
E	WE5 2 - #6	WW5 2 - #6

WINGWALL ELEVATIONS			
LOCATION	A	B	C
EAST WING	4332.77	4332.55	4331.59
WEST WING	4333.95	4333.73	4332.77

WINGWALL NOTES

1. SEE FOUNDATION PLAN 2 FOR BOTTOM OF FOOTING ELEVATION.
2. SEE ABUTMENT 6 SHEET AND ABUTMENT DETAIL SHEET FOR ABUTMENT REINFORCING.

RELEASE FOR CONSTRUCTION

NO.	DATE	REMARKS

MURRAY CITY CORPORATION
DEPARTMENT OF PUBLIC SERVICES -- ENGINEERING DIVISION
4646 SO 500 W. MURRAY UT. 84123 - (801) 270-2400

DESIGN KTF 5/03 CHECK DCO 9/03
DRAWN EMG 5/03 CHECK DCO 9/03
QUANT. KTF 5/03 CHECK DCO 9/03

SR ENGR. — SENIOR DESIGN ENGR. — DATE
APPROVAL RECOMM. — DATE
E ENGR. — UDOT BRIDGE ENGR. — APPROVED — DATE

COTTONWOOD STREET
OVER UTA AND 5300 SOUTH

ABUTMENT WINGWALL

PROJECT NUMBER * HPP-STP-2148(110

SALT LAKE COUNTY

C-923 DRG. NO.

QUANTITIES
STRUCTURAL CONCRETE 3A(AE)
WINGWALL + FILLET 10.1 CY

SHT. 25 OF 54

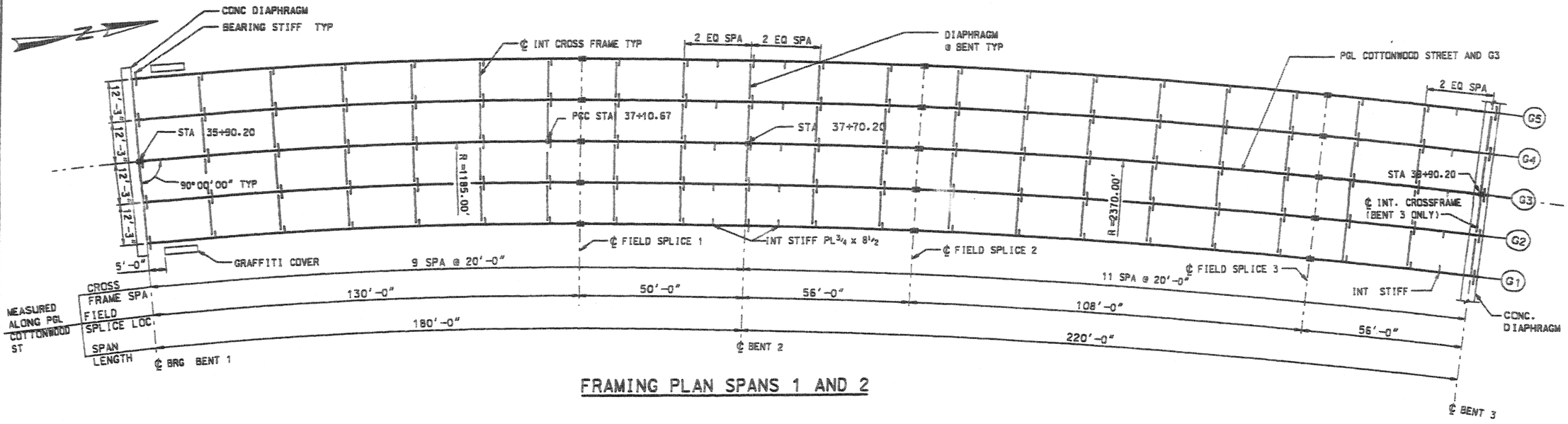

FRAMING PLAN SPANS 1 AND 2

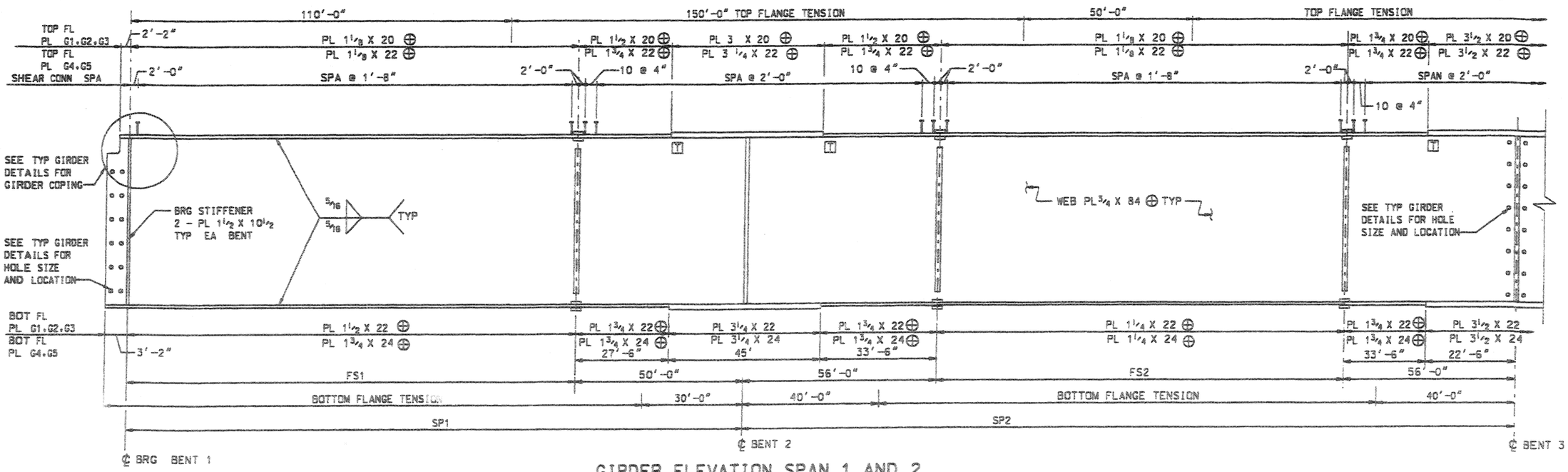

GIRDER ELEVATION SPAN 1 AND 2

LINE	SP1	SP2	FS1	FS2
G1	176'-10 11/16"	217'-8 11/16"	126'-10 11/16"	[illegible]'-8 11/16"
G2	178'-5 3/8"	218'-10 5/16"	128'-5 3/8"	[illegible]'-10 5/16"
G3	180'-0"	220'-0"	130'-0"	108'-0"
G4	181'-7"	221'-1 15/16"	131'-6 5/8"	109'-1 5/8"
G5	183'-1 1/4"	222'-3 1/4"	133'-1 1/4"	110'-3 1/4"

FRAMING PLAN NOTES

1. STRUCTURAL STEEL FOR GIRDERS SHALL BE AASHTO M270 GRADE 50.
2. CHARPY V-NOTCH TOUGHNESS TEST SHALL BE PERFORMED ON ALL MAIN LOAD CARRYING MEMBERS SUBJECT TO TENSILE STRESS INDICATED BY ⊕ TEST RESULTS SHALL MEET REQUIREMENTS FOR ZONE 2.
3. FOR WELDING DETAILS, WELDING SPECIFICATIONS AND BEARING DETAILS SEE "STANDARD GIRDER DETAILS".
4. T DENOTES FLANGE SPLICE SUBJECT TO TENSION OR STRESS REVERSAL.
5. ALL DIMENSIONS SHOWN ARE HORIZONTAL. LENGTHS USED IN FABRICATION SHALL TAKE VERTICAL CURVE AND CAMBER INTO ACCOUNT.
6. BEARING AND INTERMEDIATE STIFFENERS SHALL BE PLACED NORMAL TO WEB. ALL BEARING STIFFENERS AND OR GIRDERS SHALL BE VERTICAL AFTER DEAD LOAD IS APPLIED. ALL INTERMEDIATE STIFFENERS, INTERIOR CROSS FRAMES, AND FIELD SPLICES SHALL BE NORMAL TO GRADE.
7. ALL DIMENSIONS ARE SHOWN IN FEET AND INCHES. PLATE SIZES ARE SHOWN IN INCHES. STATIONS ARE SHOWN IN FEET.
8. ALL BEARING STIFFENERS ARE ON EACH SIDE OF WEB. INTERMEDIATE STIFFENERS ARE ON INSIDE FACE OF EXTERIOR GIRDERS AND ARE ON ONE SIDE OF INTERIOR GIRDERS.

QUANTITIES STRUCTURAL STEEL	
GIRDERS	2,406,000 LB

RELEASE FOR CONSTRUCTION

NO.	DATE	REMARKS

MURRAY CITY CORPORATION
DEPARTMENT OF PUBLIC SERVICES --- ENGINEERING DIVISION
4646 SO 500 W, MURRAY UT, 84123 - (801) 270-2400

DESIGN KTF 5/03 CHECK DCO 9/03
DRAWN TAB 5/03 CHECK DCO 9/03
QUANT. KTF 5/03 CHECK DCO 9/03

APPROVAL RECOMM. DATE SENIOR DIVISION ENGR.
APPROVED DATE CITY ENGINEER

COTTONWOOD STREET
OVER UTA AND 5300 SOUTH
FRAMING PLAN 1
PROJECT NUMBER * HPP-STP-2148(110)

SALT LAKE COUNTY
C-923
ORG. NO.

SHT. 28 OF 54

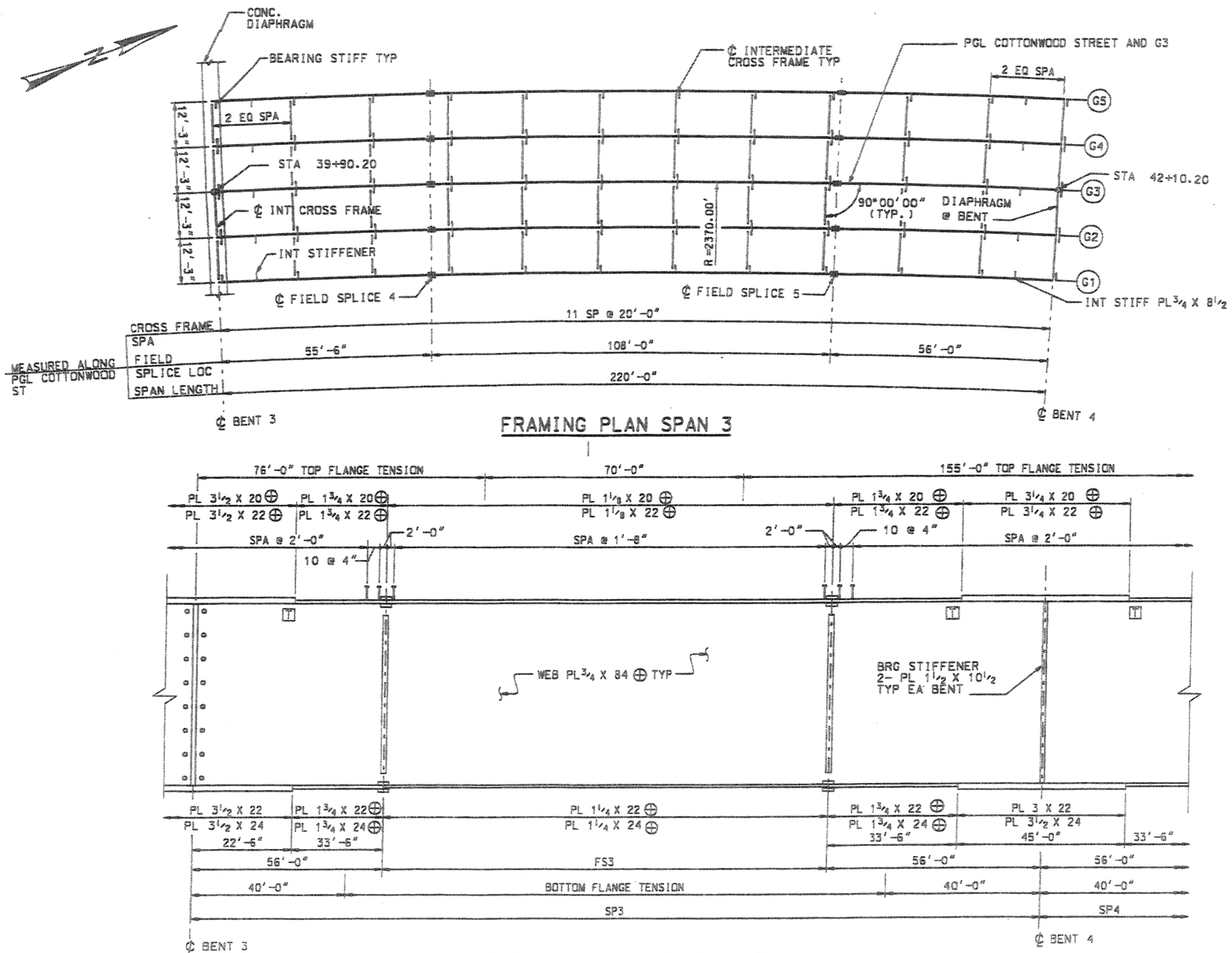

FRAMING PLAN SPAN 3

GIRDER ELEVATION SPAN 3

LINE	SP3	FS3
G1	217'-8 11/16"	105'-8 11/16"
G2	218'-10 5/16"	106'-10 5/16"
G3	220'-0"	108'-0"
G4	221'-1 15/16"	109'-1 15/16"
G5	222'-3 1/4"	110'-3 1/4"

FRAMING PLAN NOTES

1. STRUCTURAL STEEL FOR GIRDERS SHALL BE AASHTO M270 GRADE 50.
2. CHARPY V-NOTCH TOUGHNESS TEST SHALL BE PERFORMED ON ALL MAIN LOAD CARRYING MEMBERS SUBJECT TO TENSILE STRESS INDICATED BY ⊕ TEST RESULTS SHALL MEET REQUIREMENTS FOR ZONE 2.
3. FOR WELDING DETAILS, WELDING SPECIFICATIONS AND BEARING DETAILS SEE "STANDARD GIRDER DETAILS".
4. T DENOTES FLANGE SPLICE SUBJECT TO TENSION OR STRESS REVERSAL.
5. ALL DIMENSIONS SHOWN ARE HORIZONTAL. LENGTHS USED IN FABRICATION SHALL TAKE VERTICAL CURVE AND CAMBER INTO ACCOUNT.
6. BEARING AND INTERMEDIATE STIFFENERS SHALL BE PLACED NORMAL TO WEB. ALL BEARING STIFFENERS AND OR GIRDERS SHALL BE VERTICAL AFTER DEAD LOAD IS APPLIED. ALL INTERMEDIATE STIFFENERS, INTERIOR CROSS FRAMES, AND FIELD SPLICES SHALL BE NORMAL TO GRADE.
7. ALL DIMENSIONS ARE SHOWN IN FEET AND INCHES. PLATE SIZES ARE SHOWN IN INCHES. STATIONS ARE SHOWN IN FEET.
8. ALL BEARING STIFFENERS ARE ON EACH SIDE OF WEB. INTERMEDIATE STIFFENERS ARE ON INSIDE FACE OF EXTERIOR GIRDERS AND ARE ON ONE SIDE OF INTERIOR GIRDERS.

RELEASE FOR CONSTRUCTION

NO.	DATE	REMARKS

MURRAY CITY CORPORATION
DEPARTMENT OF PUBLIC SERVICES — ENGINEERING DIVISION
4646 SO 500 W. MURRAY UT. 84123 - (801) 270-2400

DESIGN KTF	5/03	CHECK DCO	9/03
DRAWN TAB	5/03	CHECK DCO	9/03
QUANT. KTF	5/03	CHECK DCO	9/03

APPROVAL RECOMM. — SENIOR PROJECT ENGR. — DATE
APPROVED — UDOT BRIDGE ENGR. — DATE

COTTONWOOD STREET
OVER UTA AND 5300 SOUTH
FRAMING PLAN 2
PROJECT NUMBER * HPP-STP-2148(1)0

SALT LAKE COUNTY
C-923 DRG. NO.
SHT. 27 OF 54

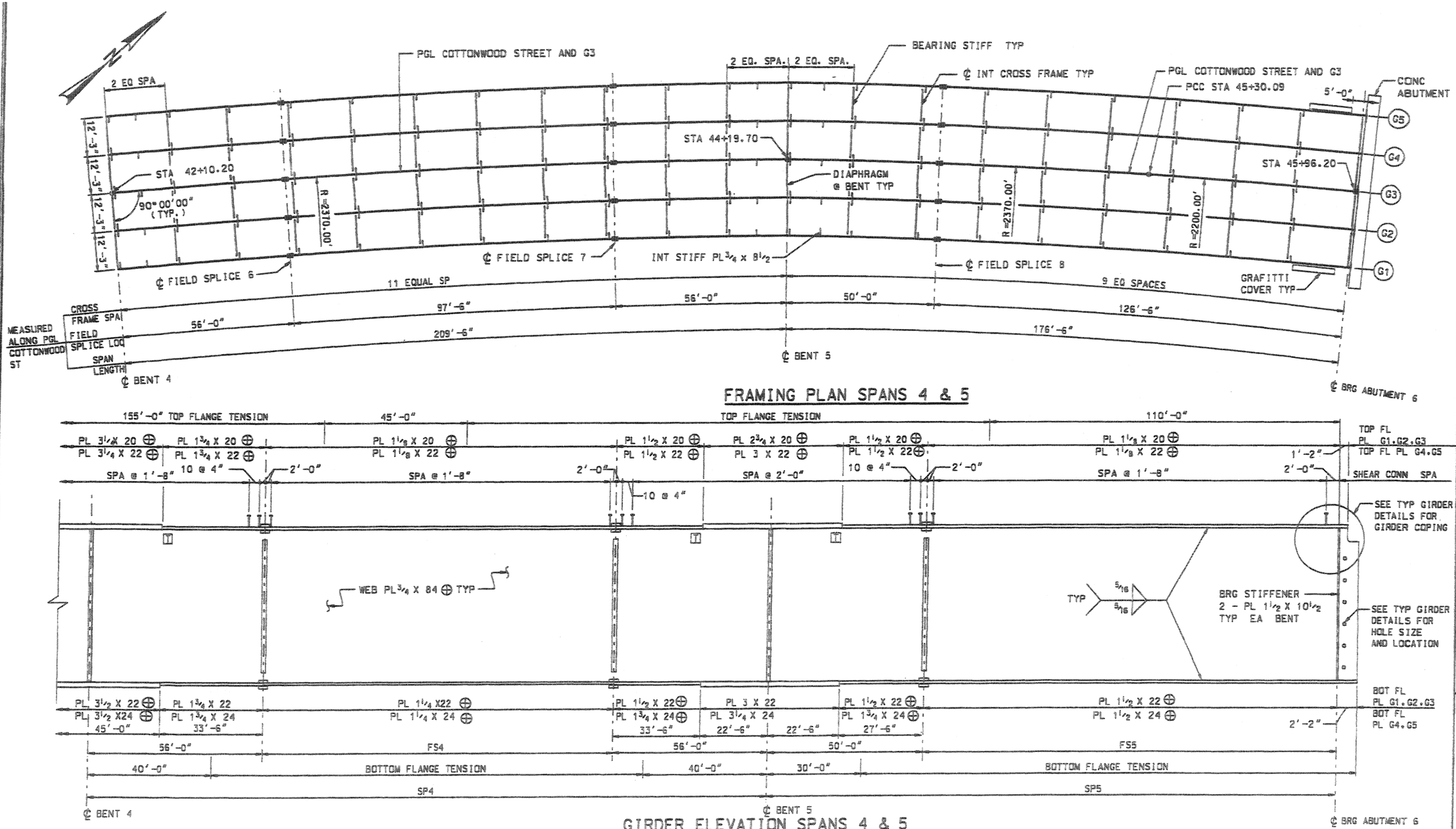

FRAMING PLAN SPANS 4 & 5

GIRDER ELEVATION SPANS 4 & 5

LINE	SP4	SP5	FS4	FS5
G1	207'-4"	174'-7 7/16"	95'-4"	124'-7 7/16"
G2	208'-5"	175'-6 3/4"	96'-5"	125'-6 3/4"
G3	209'-6"	176'-6"	97'-6"	126'-6"
G4	210'-6 15/16"	177'-5 1/2"	98'-6 15/16"	127'-5 1/2"
G5	211'-7 15/16"	178'-4 1/2"	99'-7 15/16"	128'-4 1/2"

FRAMING PLAN NOTES

1. STRUCTURAL STEEL FOR GIRDERS SHALL BE AASHTO M270 GRADE 50.
2. CHARPY V-NOTCH TOUGHNESS TEST SHALL BE PERFORMED ON ALL MAIN LOAD CARRYING MEMBERS SUBJECT TO TENSILE STRESS INDICATED BY ⊕ TEST RESULTS SHALL MEET REQUIREMENTS FOR ZONE 2.
3. FOR WELDING DETAILS, WELDING SPECIFICATIONS AND BEARING DETAILS SEE "STANDARD GIRDER DETAILS".
4. T DENOTES FLANGE SPLICE SUBJECT TO TENSION OR STRESS REVERSAL.
5. ALL DIMENSIONS SHOWN ARE HORIZONTAL. LENGTHS USED IN FABRICATION SHALL TAKE VERTICAL CURVE AND CAMBER INTO ACCOUNT.
6. BEARING AND INTERMEDIATE STIFFENERS SHALL BE PLACED NORMAL TO WEB. ALL BEARING STIFFENERS AND OR GIRDERS SHALL BE VERTICAL AFTER DEAD LOAD IS APPLIED. ALL INTERMEDIATE STIFFENERS, INTERIOR CROSS FRAMES, AND FIELD SPLICES SHALL BE NORMAL TO GRADE.
7. ALL DIMENSIONS ARE SHOWN IN FEET AND INCHES. PLATE SIZES ARE SHOWN IN INCHES. STATIONS ARE SHOWN IN FEET.
8. ALL BEARING STIFFENERS ARE ON EACH SIDE OF WEB. INTERMEDIATE STIFFENERS ARE ON INSIDE FACE OF EXTERIOR GIRDERS AND ARE ON ONE SIDE OF INTERIOR GIRDERS.

RELEASE FOR CONSTRUCTION
REMARKS
NO. DATE

MURRAY CITY CORPORATION
DEPARTMENT OF PUBLIC SERVICES — ENGINEERING DIVISION
4646 SO 500 W. MURRAY UT. 84123 - (801) 270-2400

DESIGN KTF 5/03 CHECK DCO 9/03
DRAWN TAB 5/03 CHECK DCO 9/03
QUANT. KTF 5/03 CHECK DCO 9/03

APPROVAL RECOMM. SENIOR DESIGN ENGR. DATE
APPROVED: UDOT BRIDGE ENGR. DATE

COTTONWOOD STREET
OVER UTA AND 5300 SOUTH
FRAMING PLAN 3
PROJECT NUMBER * HPP-STP-2148(110)

SALT LAKE COUNTY
C-923 DRG. NO.
SHT. 28 OF 54

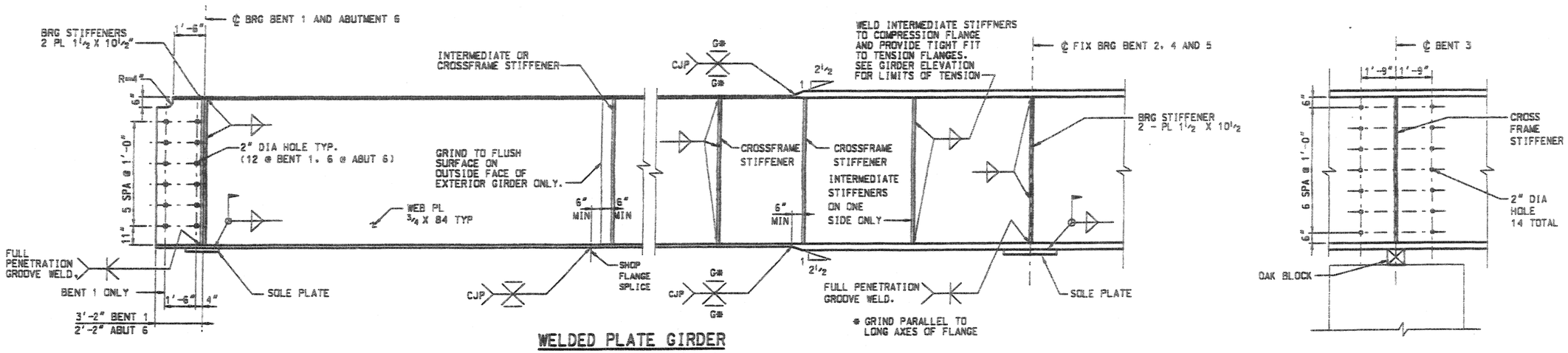

WELDED PLATE GIRDER

NOTE: FOR STIFFENER LOCATIONS, SIZES AND SPACING SEE FRAMING PLAN SHEET. PLACE STIFFENERS NORMAL TO WEB.

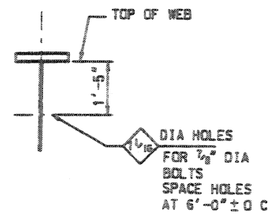

TYP BRACKET HOLE SPACING

FULL LENGTH ON GIRDERS G1 AND G5. AFTER BRACKET IS REMOVED, FILL THE HOLE IN WEB WITH A FULLY TORQUED 1" DIA HS BOLT.

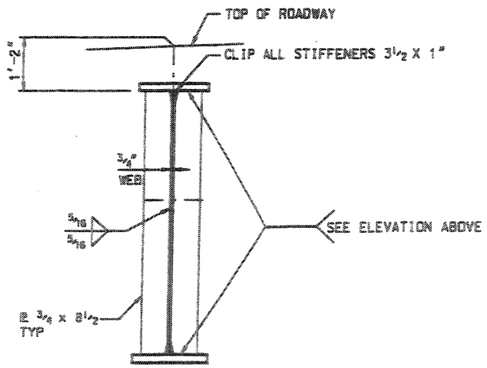

TYPICAL INTERMEDIATE STIFFENER AND CROSSFRAME DETAIL

SHEAR CONNECTOR DETAIL

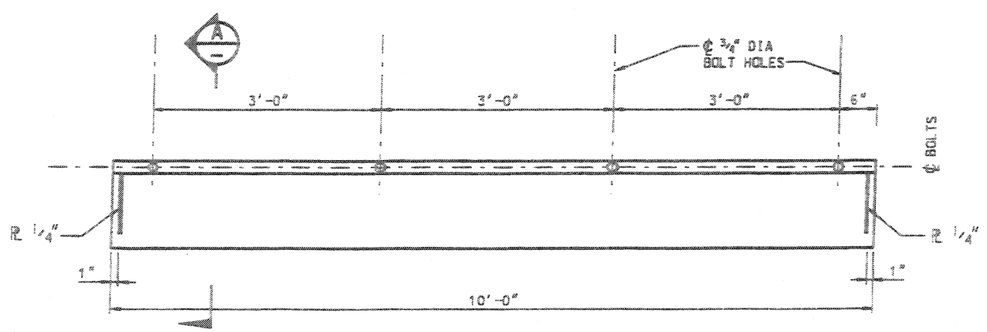

GRAFFITI COVER ELEVATION

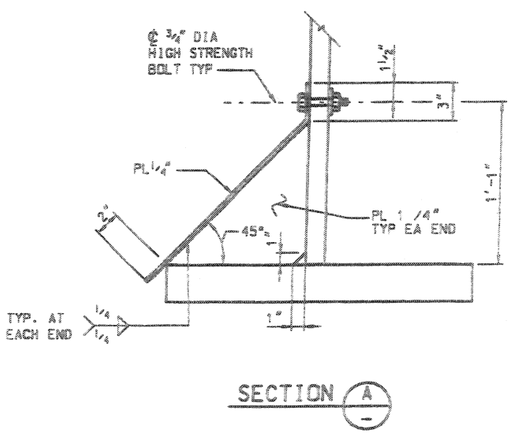

SECTION A

NOTES

1. WELDING, WELDER QUALIFICATIONS PREQUALIFICATIONS OF WELD DETAILS AND INSPECTION OF WELDS SHALL CONFORM TO THE REQUIREMENTS OF THE ANSI/AASHTO/AWS BRIDGE WELDING CODE D1.5 (2002 OR CURRENT EDITION)
2. THE METHODS OF JOINT PREPARATION FOR WELDING SHOWN ON THE PLANS ARE BASED ON THE USE OF MANUAL SHIELDED METAL-ARC WELDING. THE USE OF THIS OR ANY OTHER WELDING PROCESS WILL BE SATISFACTORY ONLY AFTER THE WELDING PROCEDURE HAS BEEN SUBMITTED BY THE CONTRACTOR AND APPROVED BY THE ENGINEER. WELDING WITH ELECTROSLAG OR ELECTROGAS METHODS SHALL NOT BE PERMITTED.
3. ALL FILLET WELDS SHALL BE THE MINIMUM SIZED WELDS REQUIRED BY ANSI/AASHTO/AWS BRIDGE WELDING CODE D1.5 FOR THE THICKNESS OF MATERIAL JOINED UNLESS OTHERWISE SPECIFIED.
4. ALL FILLET WELDS SHALL BE MINIMUM 5/16".
5. DIMENSIONS SHOWN ON THE PLANS ASSUME THE AMBIENT TEMPERATURE OF THE GIRDER TO BE 68°F. LENGTH USED IN FABRICATION SHALL BE CORRECTED AT THE RATE OF 1/4" PER 100 FT OF LENGTH FOR EVERY 10°F DIFFERENCE IN TEMPERATURE TO ALLOW EXPANSION AND CONTRACTION.
6. STRUCTURAL STEEL CONFORMING TO AASHTO M270 GRADE 36 SHALL BE ACCEPTABLE FOR SOLE PLATES & GRAFITTI COVERS. CHARPY V-NOTCH TESTING SHALL NOT BE REQUIRED FOR THIS MATERIAL.
7. FIELD WELDING TO GIRDERS SHALL NOT BE PERMITTED EXCEPT WHERE NOTED. SUCH AS THE FIELD WELDING OF SOLE PLATES.
8. GIRDER WELDING SEQUENCE: COMPLETE ALL FLANGES AND WEB SPLICES BEFORE WELDING FLANGES TO WEB PLATES TYPICAL EACH SHIPPING LENGTH.

RELEASE FOR CONSTRUCTION

NO.	DATE	REMARKS

MURRAY CITY CORPORATION
DEPARTMENT OF PUBLIC SERVICES — ENGINEERING DIVISION
4646 SO 500 W. MURRAY UT. 84123 — (801) 270-2400

DESIGN	KTF	5/03	CHECK DCD 9/03
DRAWN	TAB	5/03	CHECK DCD 9/03
QUANT.	KTF	5/03	CHECK DCD 9/03

APPROVAL RECOMM. — SENIOR DESIGN ENGR. — DATE
APPROVED — CONST ENGR DESIGN ENGR. — DATE

COTTONWOOD STREET
OVER UTA AND 5300 SOUTH
TYPICAL GIRDER DETAILS
PROJECT NUMBER * HPP-STP-2148(110

SALT LAKE COUNTY
C-923
DRG. NO.
SHT. 28 OF 54

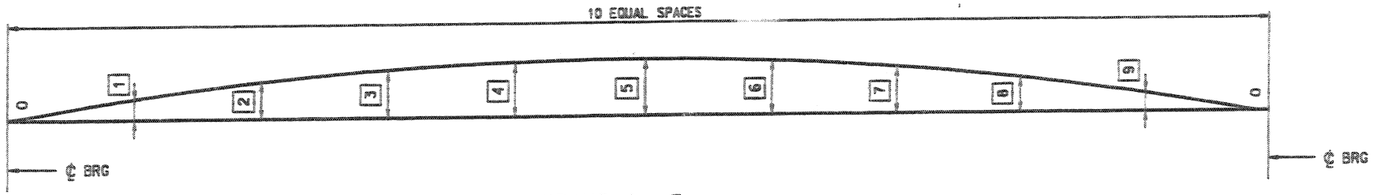

SPANS 1- 5

SPAN 1										
GIRDER	ORDINATES	1	2	3	4	5	6	7	8	9
G1	STEEL	0.37	0.68	0.88	0.95	0.89	0.73	0.49	0.24	0.06
	CONCRETE	1.01	1.83	2.38	2.58	2.43	1.97	1.32	0.66	0.17
	SUPER DL	0.26	0.46	0.60	0.66	0.62	0.51	0.35	0.18	0.05
	TOT DL	1.64	2.97	3.86	4.19	3.94	3.21	2.16	1.07	0.28
G2	STEEL	0.42	0.76	0.99	1.08	1.02	0.83	0.57	0.29	0.08
	CONCRETE	1.11	2.02	2.63	2.86	2.69	2.20	1.50	0.76	0.22
	SUPER DL	0.28	0.51	0.66	0.72	0.68	0.56	0.39	0.20	0.06
	TOT DL	1.81	3.29	4.28	4.65	4.39	3.60	2.45	1.25	0.36
G3	STEEL	0.46	0.83	1.09	1.19	1.13	0.93	0.64	0.34	0.11
	CONCRETE	1.19	2.17	2.82	3.07	2.91	2.39	1.65	0.86	0.26
	SUPER DL	0.30	0.54	0.71	0.77	0.74	0.61	0.43	0.23	0.07
	TOT DL	1.95	3.54	4.62	5.03	4.77	3.93	2.72	1.43	0.44
G4	STEEL	0.50	0.90	1.18	1.29	1.23	1.02	0.72	0.39	0.13
	CONCRETE	1.25	2.28	2.98	3.25	3.09	2.55	1.78	0.95	0.31
	SUPER DL	0.32	0.58	0.75	0.83	0.79	0.66	0.46	0.25	0.08
	TOT DL	2.07	3.76	4.91	5.37	5.11	4.23	2.95	1.59	0.52
G5	STEEL	0.54	0.99	1.29	1.41	1.35	1.12	0.79	0.43	0.15
	CONCRETE	1.33	2.42	3.16	3.45	3.28	2.71	1.89	1.02	0.34
	SUPER DL	0.34	0.62	0.82	0.89	0.86	0.71	0.50	0.27	0.09
	TOT DL'	2.21	4.02	5.26	5.75	5.48	4.55	3.18	1.73	0.58

SPAN 2										
GIRDER	ORDINATES	1	2	3	4	5	6	7	8	9
G1	STEEL	0.11	0.34	0.62	0.83	0.90	0.82	0.59	0.32	0.10
	CONCRETE	0.27	0.88	1.61	2.18	2.39	2.15	1.55	0.83	0.25
	SUPER DL	0.08	0.26	0.47	0.62	0.68	0.62	0.45	0.25	0.08
	TOT DL	0.47	1.49	2.69	3.64	3.97	3.58	2.60	1.40	0.42
G2	STEEL	0.09	0.32	0.58	0.80	0.88	0.79	0.57	0.30	0.09
	CONCRETE	0.23	0.83	1.55	2.13	2.34	2.11	1.52	0.80	0.23
	SUPER DL	0.08	0.25	0.45	0.61	0.67	0.61	0.44	0.24	0.07
	TOT DL	0.40	1.39	2.58	3.54	3.89	3.51	2.53	1.34	0.38
G3	STEEL	0.07	0.28	0.54	0.76	0.84	0.76	0.55	0.29	0.08
	CONCRETE	0.19	0.75	1.45	2.03	2.25	2.03	1.45	0.75	0.20
	SUPER DL	0.07	0.24	0.44	0.60	0.65	0.59	0.43	0.23	0.07
	TOT DL	0.33	1.27	2.43	3.38	3.74	3.38	2.43	1.27	0.34
G4	STEEL	0.05	0.24	0.49	0.70	0.79	0.71	0.51	0.26	0.06
	CONCRETE	0.14	0.65	1.31	1.88	2.10	1.90	1.35	0.68	0.17
	SUPER DL	0.05	0.22	0.41	0.57	0.63	0.58	0.42	0.22	0.06
	TOT DL	0.24	1.11	2.22	3.16	3.52	3.19	2.28	1.17	0.29
G5	STEEL	0.02	0.19	0.43	0.64	0.73	0.67	0.47	0.23	0.05
	CONCRETE	0.08	0.53	1.15	1.71	1.94	1.76	1.23	0.60	0.13
	SUPER DL	0.04	0.20	0.39	0.55	0.62	0.56	0.41	0.21	0.05
	TOT DL'	0.14	0.91	1.97	2.90	3.29	2.98	2.11	1.05	0.23

SPAN 3										
GIRDER	ORDINATES	1	2	3	4	5	6	7	8	9
G1	STEEL	0.10	0.33	0.60	0.83	0.93	0.87	0.66	0.38	0.13
	CONCRETE	0.26	0.86	1.59	2.21	2.48	2.29	1.73	0.99	0.34
	SUPER DL	0.08	0.26	0.46	0.63	0.70	0.65	0.50	0.29	0.10
	TOT DL	0.44	1.44	2.66	3.68	4.11	3.81	2.88	1.66	0.58
G2	STEEL	0.12	0.36	0.65	0.90	1.00	0.93	0.70	0.41	0.15
	CONCRETE	0.30	0.93	1.71	2.36	2.64	2.44	1.85	1.06	0.37
	SUPER DL	0.09	0.27	0.49	0.66	0.73	0.68	0.52	0.30	0.11
	TOT DL	0.50	1.56	2.85	3.92	4.37	4.05	3.07	1.77	0.63
G3	STEEL	0.13	0.39	0.69	0.95	1.05	0.98	0.74	0.44	0.16
	CONCRETE	0.33	1.00	1.80	2.47	2.76	2.55	1.93	1.12	0.40
	SUPER DL	0.09	0.28	0.51	0.69	0.76	0.71	0.54	0.32	0.11
	TOT DL	0.55	1.67	3.00	4.11	4.57	4.24	3.22	1.88	0.67
G4	STEEL	0.14	0.41	0.73	0.99	1.10	1.02	0.78	0.46	0.17
	CONCRETE	0.35	1.04	1.86	2.55	2.83	2.63	1.99	1.17	0.43
	SUPER DL	0.10	0.30	0.53	0.71	0.79	0.73	0.56	0.33	0.12
	TOT DL	0.59	1.75	3.12	4.25	4.72	4.38	3.33	1.95	0.71
G5	STEEL	0.15	0.44	0.77	1.03	1.14	1.06	0.81	0.48	0.18
	CONCRETE	0.37	1.08	1.91	2.61	2.90	2.68	2.04	1.20	0.44
	SUPER DL	0.10	0.31	0.55	0.74	0.82	0.76	0.58	0.34	0.13
	TOT DL'	0.63	1.82	3.23	4.38	4.86	4.50	3.43	2.02	0.75

SPAN 4										
GIRDER	ORDINATES	1	2	3	4	5	6	7	8	9
G1	STEEL	0.05	0.21	0.41	0.57	0.64	0.58	0.42	0.21	0.05
	CONCRETE	0.12	0.54	1.07	1.53	1.71	1.55	1.11	0.55	0.12
	SUPER DL	0.04	0.16	0.32	0.44	0.49	0.45	0.33	0.17	0.04
	TOT DL	0.21	0.90	1.79	2.54	2.84	2.58	1.85	0.94	0.21
G2	STEEL	0.04	0.20	0.40	0.57	0.64	0.58	0.41	0.20	0.04
	CONCRETE	0.11	0.51	1.05	1.51	1.69	1.53	1.08	0.53	0.10
	SUPER DL	0.04	0.16	0.31	0.44	0.49	0.44	0.32	0.17	0.04
	TOT DL	0.18	0.86	1.75	2.51	2.81	2.55	1.81	0.89	0.18
G3	STEEL	0.03	0.18	0.38	0.55	0.62	0.56	0.39	0.19	0.03
	CONCRETE	0.09	0.48	1.00	1.45	1.64	1.47	1.03	0.49	0.08
	SUPER DL	0.03	0.15	0.30	0.43	0.48	0.43	0.31	0.16	0.03
	TOT DL	0.15	0.81	1.68	2.43	2.73	2.46	1.73	0.83	0.14
G4	STEEL	0.02	0.17	0.36	0.52	0.59	0.53	0.36	0.17	0.02
	CONCRETE	0.06	0.42	0.92	1.36	1.53	1.37	0.94	0.42	0.05
	SUPER DL	0.03	0.14	0.29	0.41	0.46	0.42	0.30	0.15	0.03
	TOT DL	0.11	0.73	1.57	2.30	2.58	2.32	1.60	0.73	0.09
G5	STEEL	0.01	0.15	0.33	0.49	0.56	0.49	0.33	0.14	0.01
	CONCRETE	0.03	0.36	0.83	1.25	1.41	1.25	0.83	0.34	0.01
	SUPER DL	0.02	0.13	0.28	0.40	0.45	0.41	0.28	0.13	0.02
	TOT DL'	0.07	0.63	1.44	2.14	2.42	2.15	1.45	0.62	0.04

SPAN 5										
GIRDER	ORDINATES	1	2	3	4	5	6	7	8	9
G1	STEEL	0.11	0.32	0.59	0.84	1.01	1.06	0.97	0.74	0.40
	CONCRETE	0.28	0.84	1.56	2.23	2.69	2.82	2.59	1.98	1.08
	SUPER DL	0.07	0.22	0.40	0.57	0.68	0.72	0.65	0.50	0.27
	TOT DL	0.46	1.38	2.55	3.64	4.38	4.59	4.20	3.22	1.76
G2	STEEL	0.12	0.34	0.62	0.89	1.07	1.12	1.02	0.78	0.43
	CONCRETE	0.31	0.90	1.65	2.36	2.84	2.98	2.73	2.09	1.14
	SUPER DL	0.08	0.23	0.43	0.60	0.72	0.75	0.68	0.52	0.28
	TOT DL	0.50	1.48	2.70	3.85	4.62	4.85	4.43	3.40	1.85
G3	STEEL	0.13	0.36	0.65	0.93	1.11	1.17	1.07	0.82	0.45
	CONCRETE	0.33	0.95	1.72	2.45	2.94	3.09	2.82	2.17	1.18
	SUPER DL	0.08	0.25	0.44	0.62	0.74	0.78	0.71	0.54	0.29
	TOT DL	0.54	1.56	2.82	4.00	4.80	5.03	4.60	3.52	1.92
G4	STEEL	0.13	0.38	0.68	0.96	1.15	1.21	1.10	0.85	0.46
	CONCRETE	0.34	0.98	1.76	2.50	3.00	3.15	2.88	2.21	1.20
	SUPER DL	0.09	0.25	0.46	0.64	0.77	0.80	0.73	0.56	0.30
	TOT DL	0.56	1.61	2.89	4.10	4.92	5.16	4.72	3.61	1.97
G5	STEEL	0.14	0.39	0.70	0.99	1.19	1.25	1.14	0.88	0.48
	CONCRETE	0.36	1.00	1.79	2.54	3.06	3.21	2.94	2.25	1.23
	SUPER DL	0.09	0.27	0.47	0.67	0.80	0.83	0.76	0.58	0.32
	TOT DL'	0.59	1.65	2.96	4.20	5.04	5.29	4.84	3.71	2.02

NOTES

1. ALL ORDINATES ARE GIVEN IN INCHES.

RELEASE FOR CONSTRUCTION

NO.	DATE	REMARKS

MURRAY CITY CORPORATION
DEPARTMENT OF PUBLIC SERVICES — ENGINEERING DIVISION
4646 SO 500 W, MURRAY UT, 84123 - (801) 270-2400

DESIGN KTF 5/03 CHECK DCO 9/03
DRAWN TAB 5/03 CHECK DCO 9/03
QUANT. KTF 5/03 CHECK DCO 9/03

APPROVAL RECOM. _____ DATE _____ SENIOR PROJECT ENGR.
APPROVED _____ DATE _____ CITY ENGINEER

COTTONWOOD STREET
OVER UTA AND 5300 SOUTH

CAMBER DIAGRAM

PROJECT NUMBER * HPP-STP-2148(110)

SALT LAKE
COUNTY

C-923
DRG. NO.

SHT. 30 OF 34

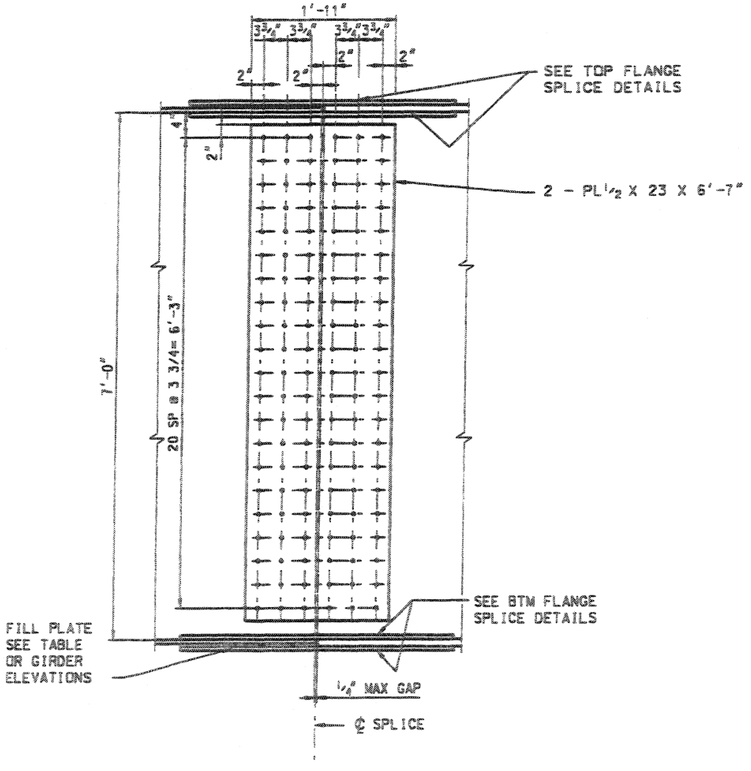

WEB SPLICE ALL GIRDERS

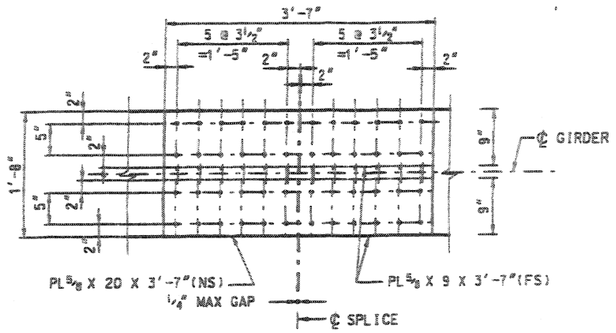

TOP FLANGE GIRDERS G1, G2 AND G3

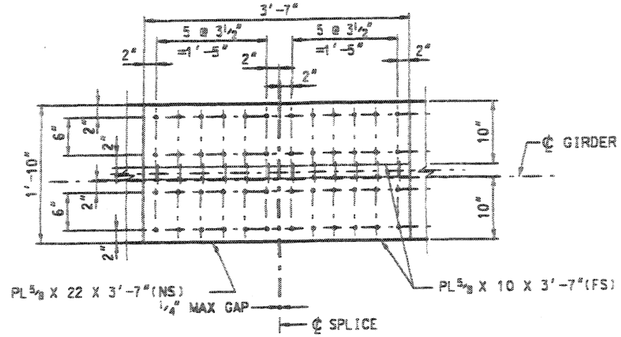

TOP FLANGE SPLICE GIRDERS G4 AND G5

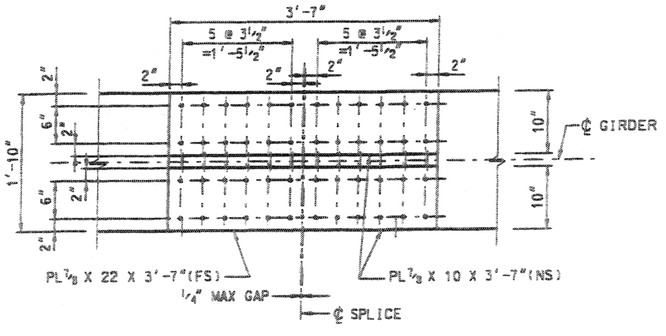

BOTTOM FLANGE SPLICE GIRDERS G1, G2 AND G3

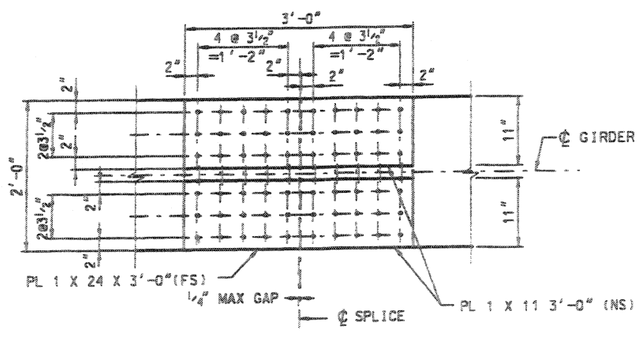

BOTTOM FLANGE SPLICE GIRDERS G4 AND G5

FILL PLATE THICKNESS FOR FIELD SPLICES

LOCATION	G1 - G3		G4 - G5	
	TOP FLANGE	BOTTOM FLANGE	TOP FLANGE	BOTTOM FLANGE
F.S. 1	3/8"	1/4"	5/8"	NONE
F.S. 2	3/8"	1/4"	3/8"	1/2"
F.S. 3,4,5,6	5/8"	1/2"	5/8"	1/2"
F.S. 7	3/8"	1/4"	3/8"	1/2"
F.S. 8	3/8"	NONE	3/8"	1/4"

NOTES

1. SPLICE MATERIAL SHALL BE M270M GRADE 50 U.N. WITH CVN TESTING.
2. STRUCTURAL STEEL CONFORMING TO AASHTO M270M GRADE 36 SHALL BE ACCEPTABLE FOR USE AS FILL PLATES. CHARPY V-NOTCH TESTING SHALL NOT BE REQUIRED FOR THIS MATERIAL.
3. ALL BOLTS SHALL BE 1" DIA ASTM A325 WITH THREADS EXCLUDED FROM SHEAR PLANE.

QUANTITIES STRUCTURAL STEEL	
SPLICE	60800 lb

RELEASE FOR CONSTRUCTION

NO.	DATE	REMARKS

MURRAY CITY CORPORATION
DEPARTMENT OF PUBLIC SERVICES — ENGINEERING DIVISION
4646 SO 500 W. MURRAY UT. 84123 - (801) 270-2400

DESIGN	KTF	5/03	DCO 9/03
DRAWN	TAB	5/03	DCO 9/03
QUANT.	KTF	5/03	DCO 9/03

APPROVAL RECOMMENDED — DATE — SENIOR SYSTEM ENGR.
APPROVED — DATE — DEPT. BRIDGE ENGR.

COTTONWOOD STREET
OVER UTA AND 5300 SOUTH
FIELD SPLICE DETAILS
PROJECT NUMBER * HPP-STP-2148(110)

SALT LAKE COUNTY
C-923 DRG. NO.
SHT. 31 OF 54

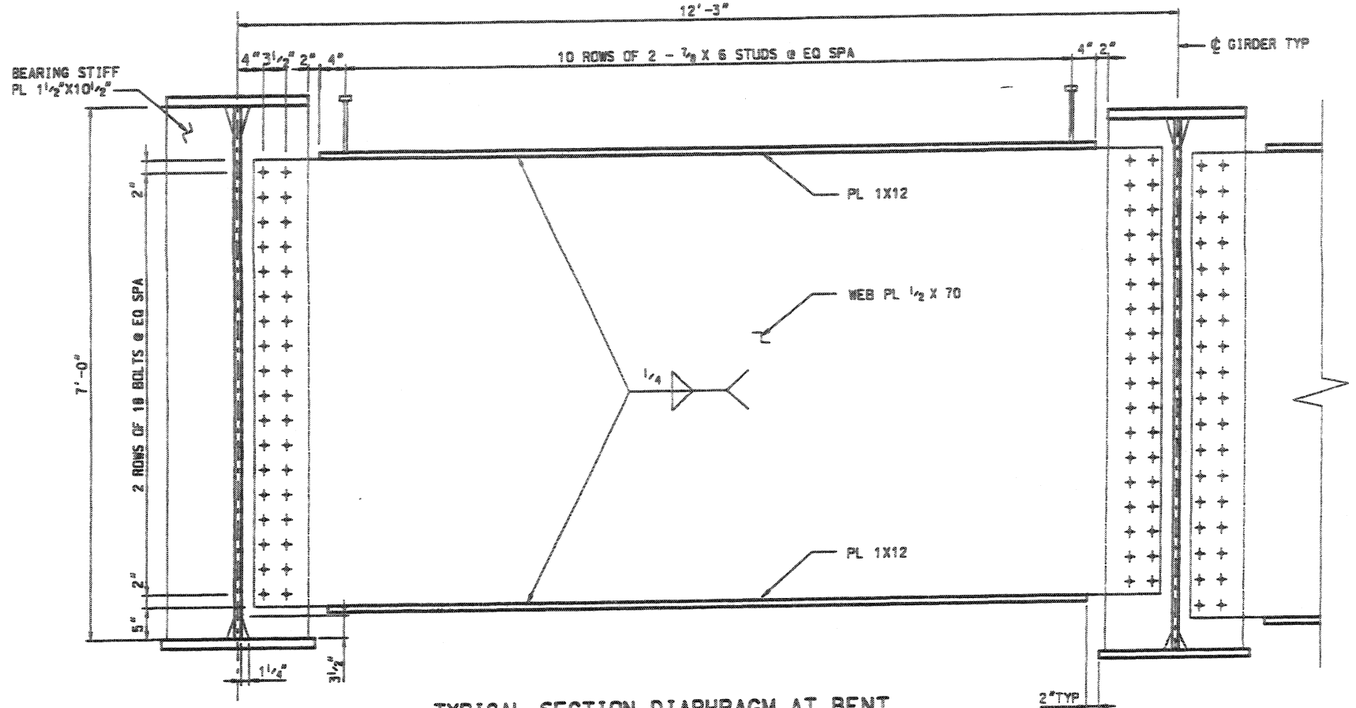

TYPICAL SECTION DIAPHRAGM AT BENT

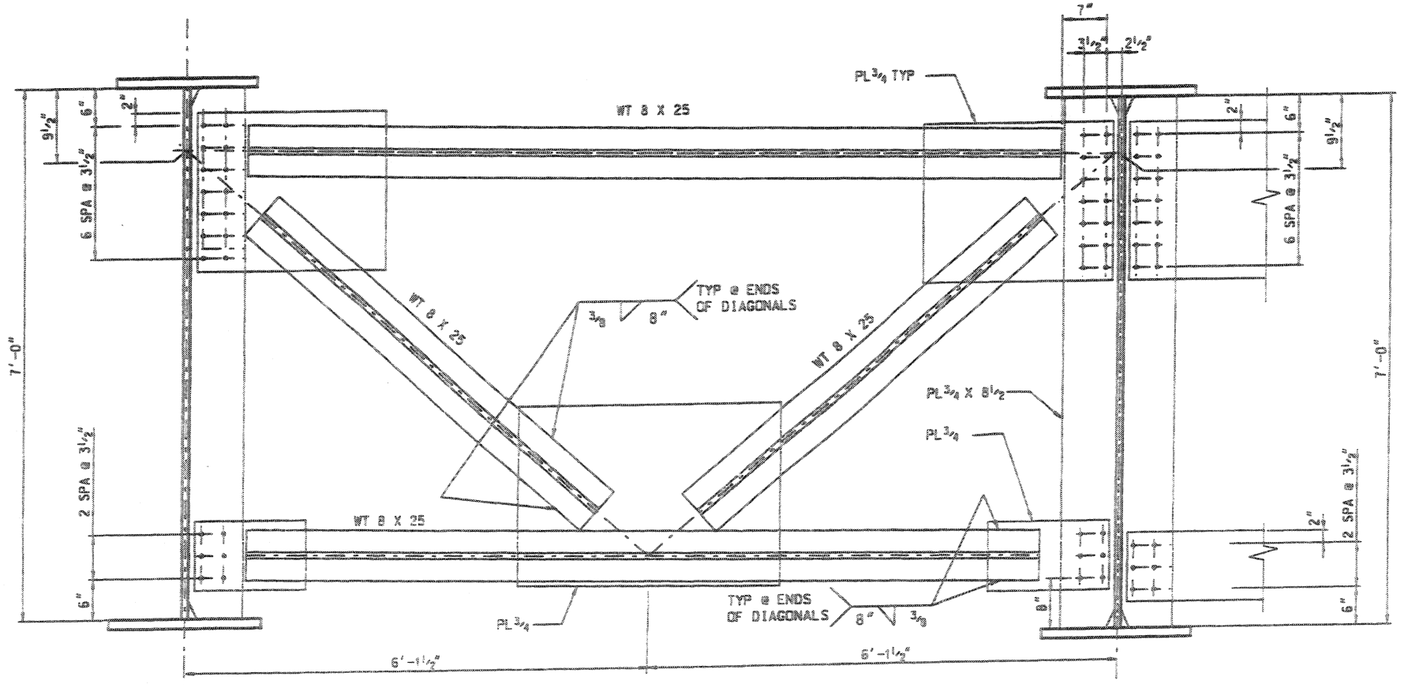

TYPICAL SECTION INTERMEDIATE CROSSFRAME

NOTES

1. ALL WELDS ARE ⅜" EXCEPT AS OTHERWISE INDICATED.
2. ALL BOLTS SHALL BE 1" DIA.
3. MATERIAL FOR DIAPHRAGMS AT BENTS & BEARING STIFFENERS SHALL BE M270, GRADE 50 (CVN).
4. MATERIAL FOR INTERMEDIATE CROSSFRAMES SHALL BE M270, GRADE 50.
5. DIAPHRAGMS TO BE PLACED LEVEL TRANSVERSLY.
6. INTERMEDIATE CROSSFRAMES TO BE PLACED PARALLEL WITH ROADWAY CROSS SLOPE.
7. MAINTAIN GIRDER IN PLUMB POSITION AFTER SPLICING THE GIRDERS TOGETHER.

QUANTITIES STRUCTURAL STEEL	
DIAPHRAGM AT BENT	49900 LB
INTER CROSS FRAME	243000 LB
TOTAL	292000 LB

RELEASE FOR CONSTRUCTION

NO.	DATE	REMARKS

MURRAY CITY CORPORATION
DEPARTMENT OF PUBLIC SERVICES — ENGINEERING DIVISION
4646 SO 500 W, MURRAY UT, 84123 - (801) 270-2400

DESIGN KTF 5/03 | CHECK DCO 9/03
DRAWN TAB 5/03 | CHECK DCO 9/03
QUANT. KTF 5/03 | CHECK DCO 9/03

APPROVED: _____ DATE _____ SENIOR DESIGN ENGR.
APPROVED: _____ DATE _____ UDOT BRIDGE ENGR.

COTTONWOOD STREET
OVER UTA AND 5300 SOUTH
CROSSFRAME AND DIAPHRAGM
PROJECT NUMBER * HPP-STP-2148(1)0

SALT LAKE COUNTY
C-923 DRG. NO.
SHT. 32 OF 34

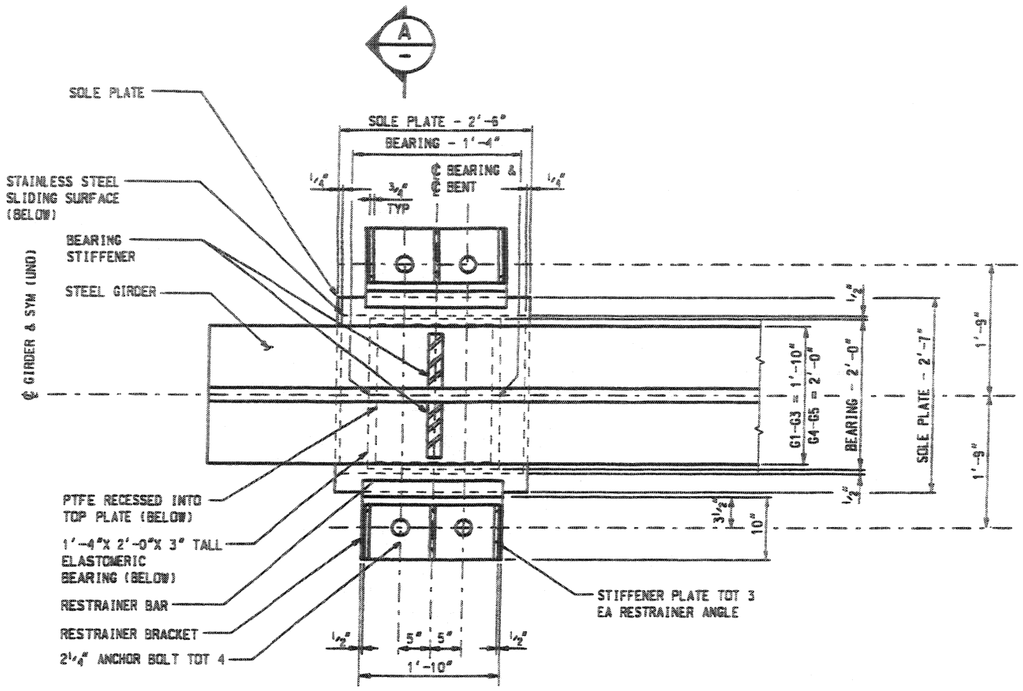

EXPANSION BEARING PLAN - BENT 1 AND ABUTMENT 6

SEE SHT 35 FOR TEMPERATURE MOVEMENT TABLE

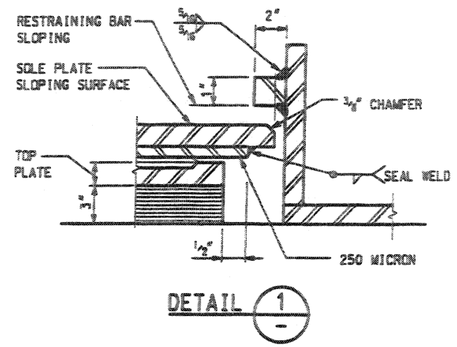

DETAIL 1

BENT 1 AND ABUTMENT 6					
TABLE OF TEMPERATURE ADJUSTMENTS					
TEMP. °F	-30°	17°	64°	92°	120°
ADJUSTMENT	3.63"	1.82"	0"	-1.08"	-2.16"

AT 64° ℄ OF SOLE PLATE = ℄ BEARING
ADJUSTMENT = +/- 0.039" PER °F
NEGATIVE ADJUSTMENT REFLECTS DISTANCE TOWARD EMBANKMENT.
POSITIVE ADJUSTMENT REFLECTS DISTANCE TOWARD ADJACENT BENT, 2 OR 5, AS APPROPRIATE

EXPANSION BEARING NOTES

1. ALL DIMENSIONS ARE IN FEET AND INCHES.
2. DIMENSIONS AND REQUIREMENTS NOT SHOWN ARE GIVEN ELSEWHERE IN THE BRIDGE PLANS.
3. STRUCTURAL STEEL SHALL BE AASHTO M 270 GRADE 36 MINIMUM.
4. TOP OF SOLE PLATE SHALL BE MACHINED TO MATCH THE SLOPE OF ROADWAY GRADE.
5. THICKNESS OF SOLE PLATE, AND HEIGHT IS GIVEN AT THE CENTERLINE OF BEARING. MINIMUM THICKNESS OF SOLE PLATE SHALL BE 3/4" AT THE EDGE.
6. ALL WELDS SHALL BE MINIMUM OF 1/4".
7. FIELD WELDING TO GIRDERS SHALL NOT BE PERMITTED EXCEPT WHERE NOTED.
8. SEE SHEET 34 FOR ANCHOR BOLT DETAIL.
9. ELASTOMERIC BEARINGS SHALL BE REINFORCED WITH STEEL LAMINATIONS. DUROMETER HARDNESS = 60.
   ELASTOMERIC BEARING PAD IS MADE UP OF:
   5 - 12 GAUGE STEEL SHIMS
   4 - 1/8" INTERNAL ELASTOMERIC LAYERS
   2 - 1/4" EXTERNAL ELASTOMERIC LAYERS
10. EPOXY BONDING ELASTOMERIC BEARING TO GROUT PAD IS OPTIONAL. IF BONDING IS ELECTED, BOND IN ACCORDANCE WITH THE RECOMMENDATIONS OF THE BEARING MANUFACTURER.
11. TOP PLATE SHALL BE HOT BONDED TO THE ELASTOMERIC BEARING DURING VULCANIZATION.
12. TOP PLATE SHALL BE THE SAME PLAN SIZE AS THE ELASTOMERIC BEARING.
13. TOP PLATE, RECESSED PTFE AND STAINLESS STEEL SLIDING SURFACE SHALL BE DESIGNED BY THE MANUFACTURER FOR THE REQUIREMENTS AND LOADS LISTED.
    MAX SERVICE LOAD= 374 K
    MIN SERVICE LOAD= 276 K
14. STAINLESS STEEL SHALL BE 1/16" THICK, MINIMUM.

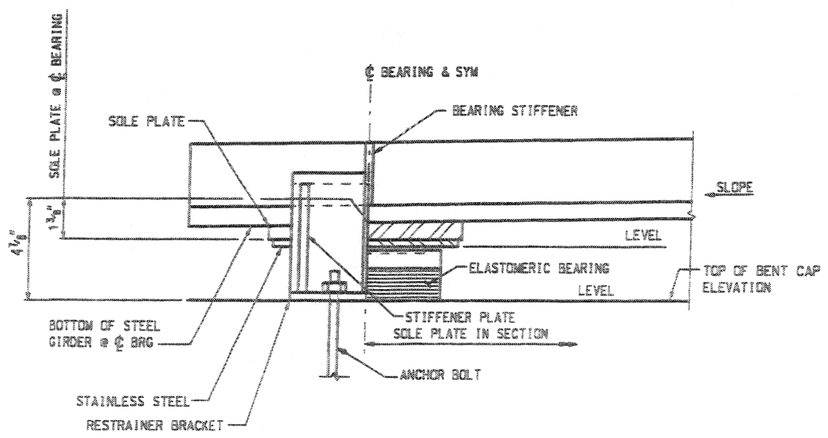

EXPANSION BEARING ELEVATION

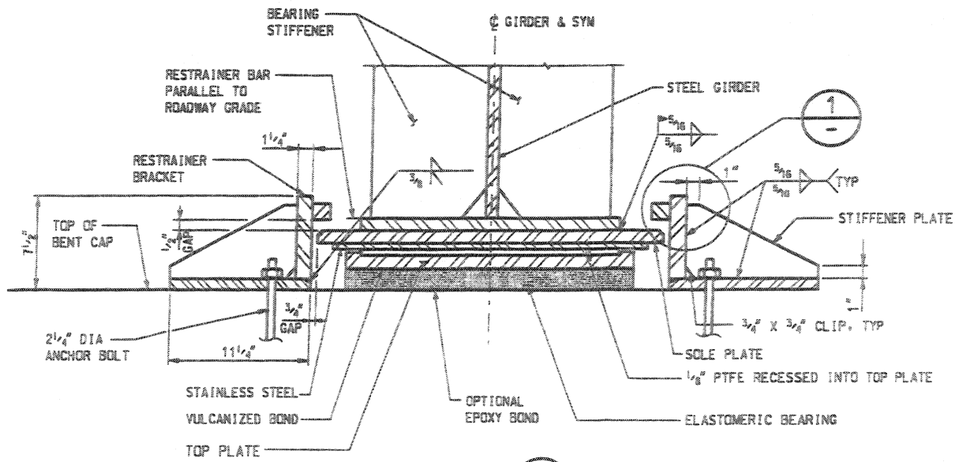

SECTION A

RELEASE FOR CONSTRUCTION

NO.	DATE	REMARKS

MURRAY CITY CORPORATION
DEPARTMENT OF PUBLIC SERVICES --- ENGINEERING DIVISION
4646 SO 500 W. MURRAY UT. 84123 - (801) 270-2400

DESIGN KTF	5/03	CHECK DCO	9/03
DRAWN TAB	5/03	CHECK DCO	9/03
QUANT. KTF	5/03	CHECK DCO	9/03

APPROVAL RECOMM. — SENIOR DESIGN ENGR. — DATE
APPROVED — CITY ENGINEER — DATE

COTTONWOOD STREET
OVER UTA AND 5300 SOUTH

EXPANSION BEARING

PROJECT NUMBER * HPP-STP-2148(1)10

SALT LAKE COUNTY

C-923
ORG. NO.

SHT. 33 OF 54

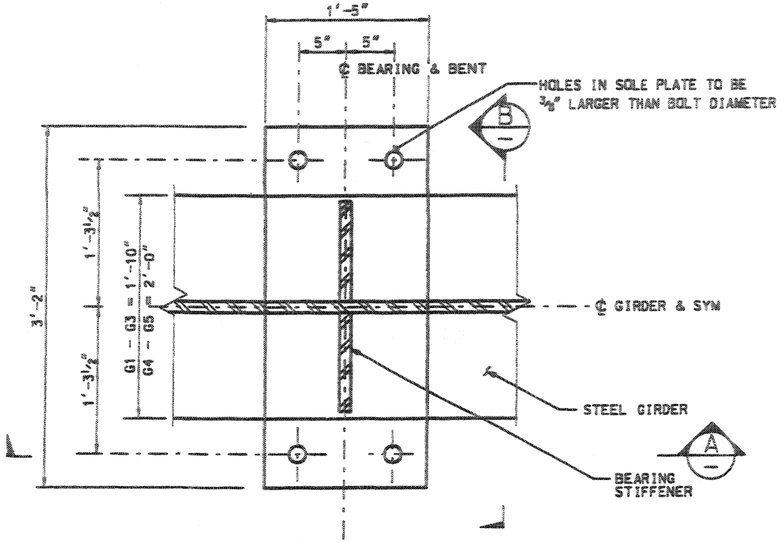

FIX BEARING PLAN - BENTS 2.4 AND 5

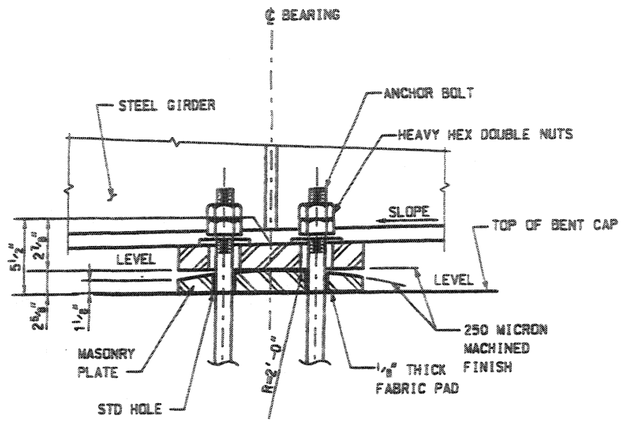

SECTION A

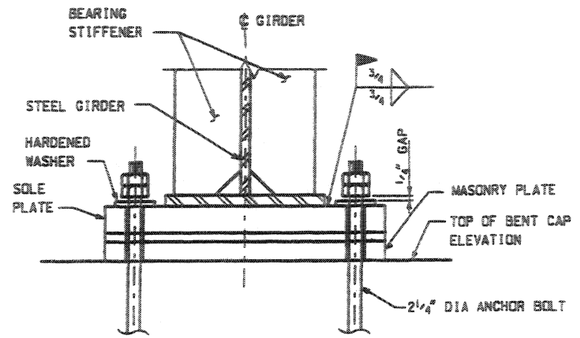

SECTION B

LOCATION	MAX VERT LOAD (KIP)	MIN VERT LOAD (KIP)	MAX ROTATION (RAD)
BENTS 2.4 AND 5	815	541	0.0055

FIX BEARING NOTES

1. ALL DIMENSIONS ARE IN INCHES.
2. STRUCTURAL STEEL SHALL BE AASHTO M 270M GRADE 36 MINIMUM.
3. TOP OF SOLE PLATE SHALL BE MACHINED TO MATCH THE SLOPE OF ROADWAY GRADE.
4. SOLE PLATE SHALL BE THE SAME PLAN SIZE AS THE MASONRY PLATE.
5. THICKNESS OF SOLE PLATE IS GIVEN AT THE CENTERLINE OF BEARING. MINIMUM THICKNESS OF SOLE PLATE SHALL BE ¾" AT THE EDGE.
6. ALL WELDS SHALL BE MINIMUM OF ¼".
7. FIELD WELDING TO GIRDERS SHALL NOT BE PERMITTED EXCEPT WHERE NOTED.
8. ANCHOR BOLT DOUBLE NUTS SHALL BE TIGHTENED TO FORM A PERMANENT GAP.

ANCHOR BOLT TABLE		
LOCATION	LENGTH, LB (IN)	THREAD LENGTH, T (IN)
EXP BRG (BENT 1 AND ABUT 6)	2'-7"	1'-4"
FIX BRG (BENTS 2.4.AND 5)	3'-1"	1'-10"
POT BRG (BENT 3)	2'-8¼"	1'-6"

ALL ANCHOR BOLT SHALL HAVE A MINIMUM OF 1⅛" THREAD ABOVE NUT AFTER TIGHTENING.

RELEASE FOR CONSTRUCTION

NO.	DATE	REMARKS

MURRAY CITY CORPORATION
DEPARTMENT OF PUBLIC SERVICES -- ENGINEERING DIVISION
4646 SO 500 W. MURRAY UT. 84123 - (801) 270-2400

DESIGN KTF 5/03 CHECK DCO 9/03
DRAWN TAB 5/03 CHECK DCO 9/03
QUANT. KTF 5/03 CHECK DCO 9/03

APPROVAL RECOMM. DATE SENIOR DESIGN ENGR.
APPROVED DATE UDOT BRIDGE ENGR.

COTTONWOOD STREET
OVER UTA AND 5300 SOUTH

FIX BEARING

PROJECT NUMBER * HPP-STP-2148(1)0

SALT LAKE COUNTY

C-923 ORG. NO.

SHT. 34 OF 54

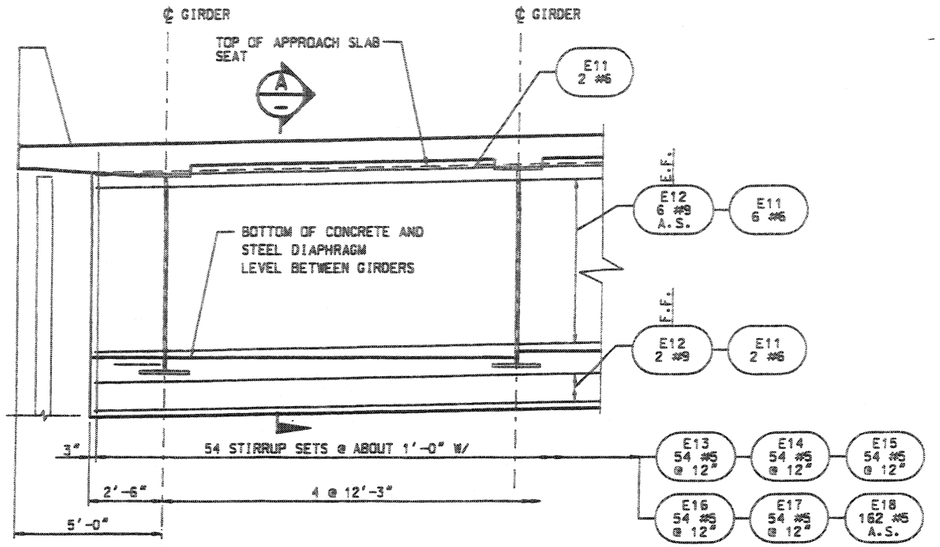

ELEVATION - CONCRETE DIAPHRAGM @ BENT 1

LOOKING BACK ON STATION
STEEL DIAPHRAGM ON FRONT FACE NOT SHOWN FOR CLARITY

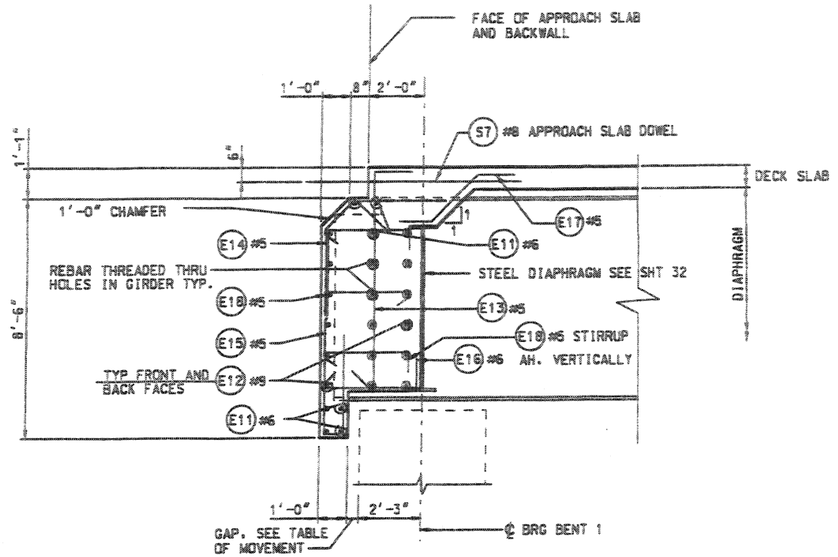

SECTION A –
DECK REINFORCING NOT SHOWN

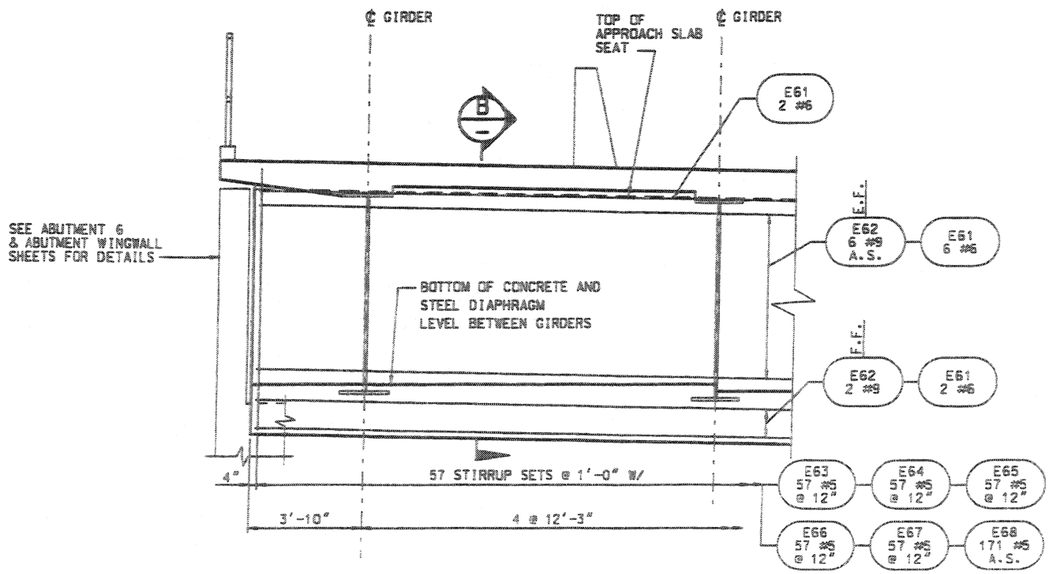

ELEVATION - CONCRETE DIAPHRAGM @ ABUTMENT 6

LOOKING AHEAD ON STATION
STEEL DIAPHRAGM ON FRONT FACE NOT SHOWN FOR CLARITY

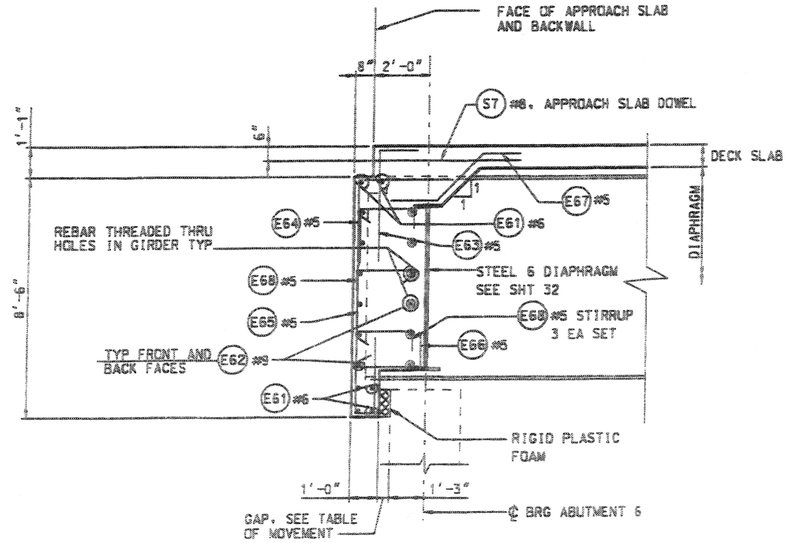

SECTION B –
DECK REINFORCING NOT SHOWN

TABLE OF MOVEMENT					
TEMPERATURE °F	-30	17	64	92	120
GAP (IN)	1.37	3.18	5	6.08	7.16

GAP ADJUSTMENT = 0.039" / °F

QUANTITIES STRUCTURAL CONCRETE 3A(AE)	
END DIAPHRAGM BENT 1	55.0 CY
END DIAPHRAGM ABUTMENT 6	49.5 CY
TOTAL	104.5 CY

RELEASE FOR CONSTRUCTION

NO.	DATE	REMARKS

MURRAY CITY CORPORATION
DEPARTMENT OF PUBLIC SERVICES -- ENGINEERING DIVISION
4646 SO 500 W, MURRAY UT. 84123 - (801) 270-2400

DESIGN KTF 5/03	CHECK DCO 9/03	APPROVAL RECOMMD. SENIOR DESIGN ENGR. DATE
DRAWN TAB 5/03	CHECK DCO 9/03	APPROVED HIGHWAY BRIDGE ENGR. DATE
QUANT. KTF 5/03	CHECK DCO 9/03	

COTTONWOOD STREET
OVER UTA AND 5300 SOUTH
END DIAPHRAGM

PROJECT NUMBER * HPP-STP-2148(110)

SALT LAKE COUNTY

C-923 DRG. NO.

SHT. 35 OF 54

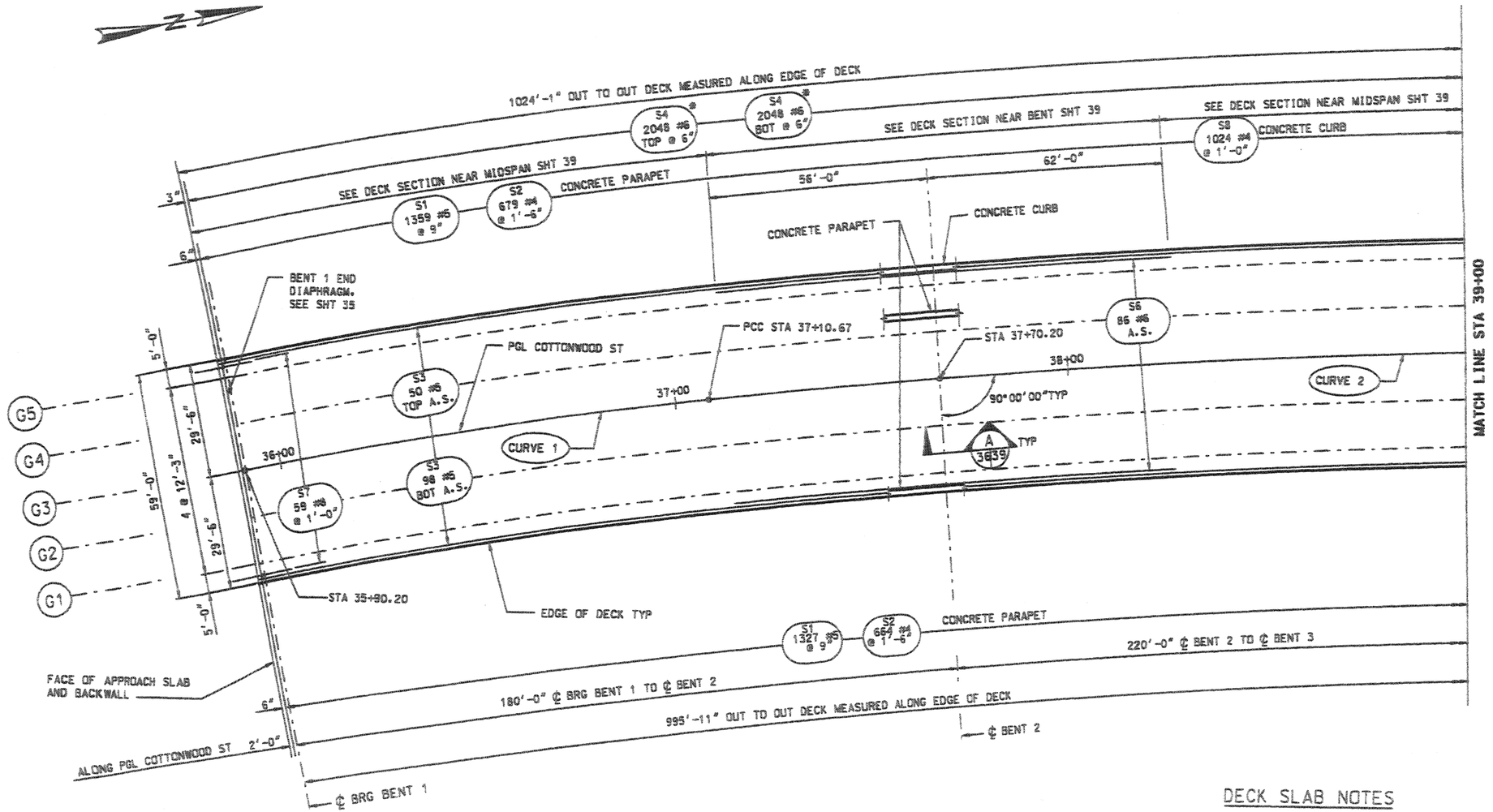

DECK PLAN 1

DECK SLAB NOTES

1. SEE DECK SECTIONS SHEET FOR ADDITIONAL REINFORCEMENT.
2. FOR POURING SEQUENCE SEE SHEET 40.
3. SEE SHEET 43 FOR PARAPET REINFORCEMENT DETAILS, AND SEE SHT 45 FOR CURB REINFORCEMENT DETAILS.
4. ALTERNATE LONGITUDINAL REINFORCING TO STAGGER LAPS. LONGITUDINAL BARS SHALL NOT BE SPLICED WITHIN 20'-0" OF ℄ OF BENT.
5. MINIMUM LAP LENGTH FOR LONGITUDINAL DECK REINFORCING:
   #5 2'-6"
   #8 7'-6"
6. TRANSVERSE BARS SHALL BE PLACED RADIALLY AND SPACED ALONG OUTSIDE CURVE OF STRUCTURE AT (*) SPACING SHOWN.

QUANTITIES	
STRUCTURAL CONCRETE (BRIDGE)	
DECK SLAB + HAUNCH	1837.3 CY

RELEASE FOR CONSTRUCTION

NO.	DATE	REMARKS

MURRAY CITY CORPORATION
DEPARTMENT OF PUBLIC SERVICES — ENGINEERING DIVISION
4646 SO 500 W, MURRAY UT, 84123 — (801) 270-2400

DESIGN KTF 5/03 CHECK DCO 9/03
DRAWN TAB 5/03 CHECK DCO 9/03
QUANT. KTF 5/03 CHECK DCO 9/03

APPROVAL RECOMM. DATE SENIOR DESIGN ENGR.
APPROVED DATE UDOT BRIDGE ENGR.

COTTONWOOD STREET
OVER UTA AND 5300 SOUTH
DECK PLAN 1

PROJECT NUMBER * HPP-STP-2148(110)

SALT LAKE COUNTY

C-923 DRG. NO.

SHT. 38 OF 54

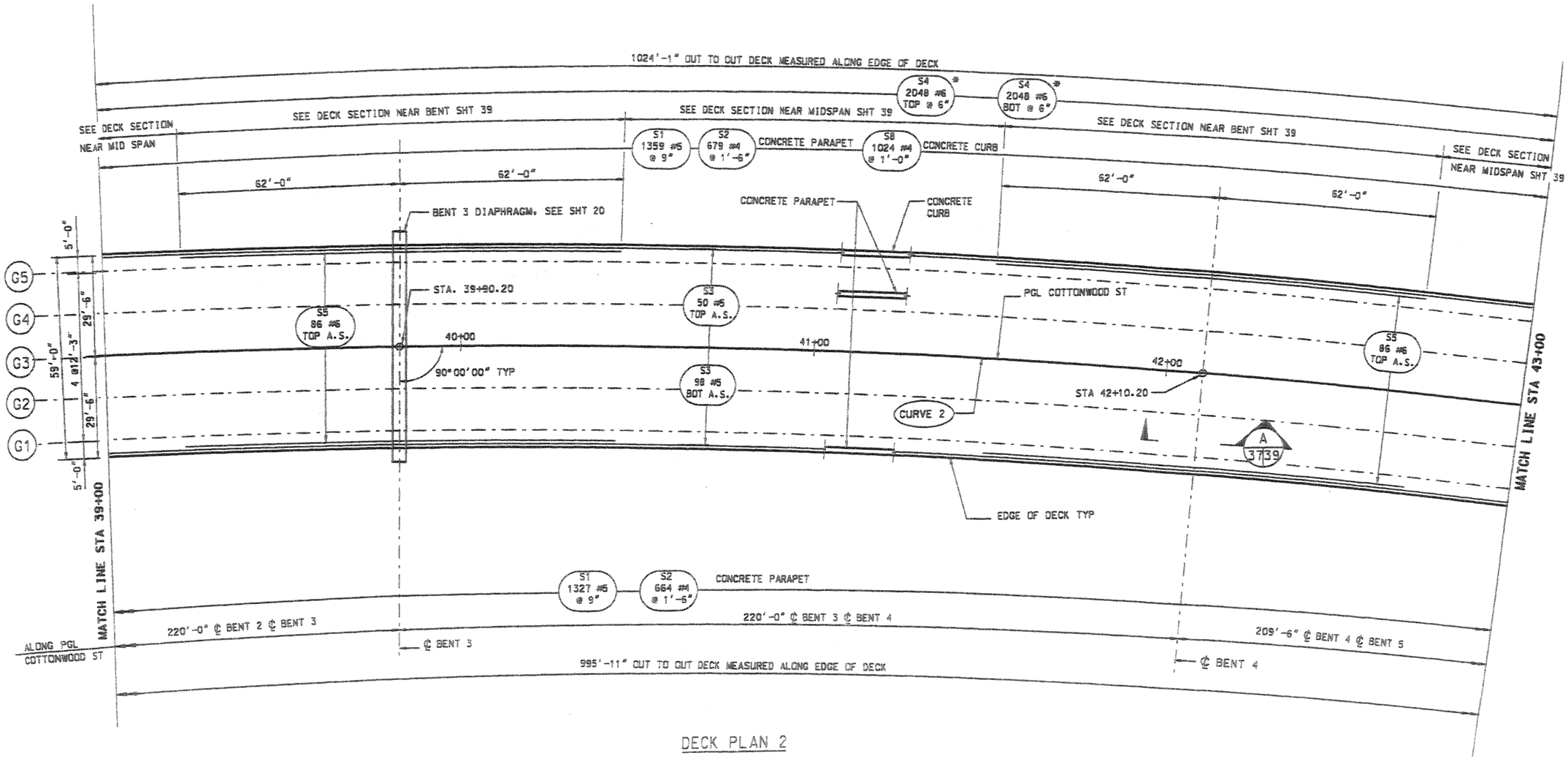

DECK PLAN 2

NOTES

1. SEE SHEET 36 FOR DECK SLAB NOTES.

RELEASE FOR CONSTRUCTION

NO.	DATE	REMARKS

MURRAY CITY CORPORATION
DEPARTMENT OF PUBLIC SERVICES — ENGINEERING DIVISION
4646 SO 500 W. MURRAY UT. 84123 - (801) 270-2400

DESIGN KTF	5/03	CHECK DCO	9/03
DRAWN TAB	5/03	CHECK DCO	9/03
QUANT. KTF	5/03	CHECK DCO	9/03

APPROVAL RECOMM. — DATE — SENIOR DESIGN ENGR.
APPROVED — DATE — HIGH BRIDGE ENGR.

COTTONWOOD STREET
OVER UTA AND 5300 SOUTH
DECK PLAN 2
PROJECT NUMBER * HPP-STP-2148(110)

SALT LAKE COUNTY
C-923 DRG. NO.
SHT. 37 OF 54

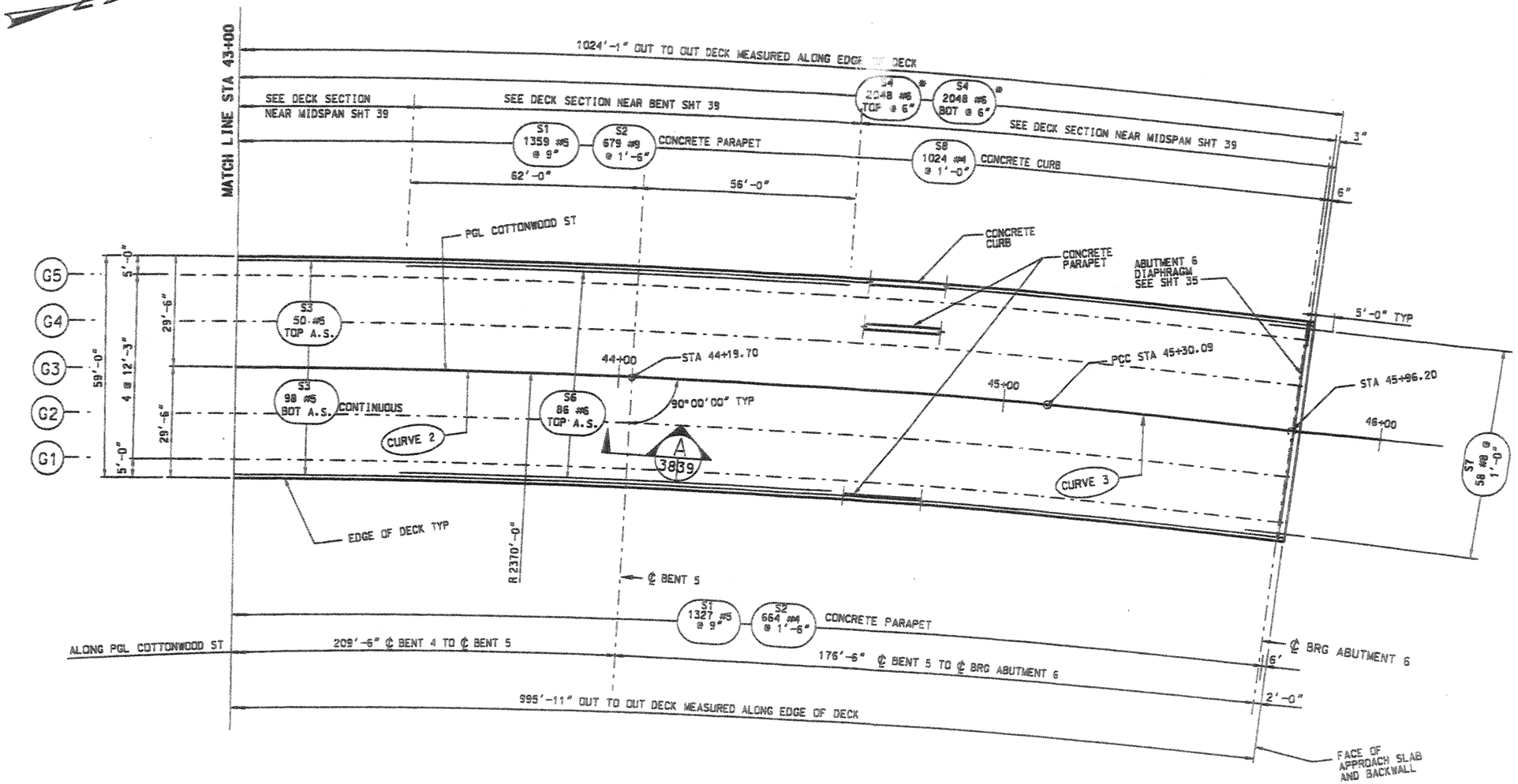

DECK PLAN 3

NOTES

1. SEE SHEET 36 FOR DECK SLAB NOTES.

RELEASE FOR CONSTRUCTION

NO.	DATE	REMARKS

MURRAY CITY CORPORATION
DEPARTMENT OF PUBLIC SERVICES — ENGINEERING DIVISION
4646 SO 500 W. MURRAY UT. 84123 - (801) 270-2400

DESIGN KTF 5/03	CHECK DCO 9/03	
DRAWN TAB 5/03	CHECK DCO 9/03	
QUANT. KTF 5/03	CHECK DCO 9/03	

SENIOR DESIGN ENGR. ____ DATE ____
SENIOR BRIDGE ENGR. ____ DATE ____
APPROVED ____ DATE ____

COTTONWOOD STREET
OVER UTA AND 5300 SOUTH
DECK PLAN 3
PROJECT NUMBER * HPP--STP-2(48)10

SALT LAKE COUNTY
C-923 DRG. NO.
SHT. 38 OF 54

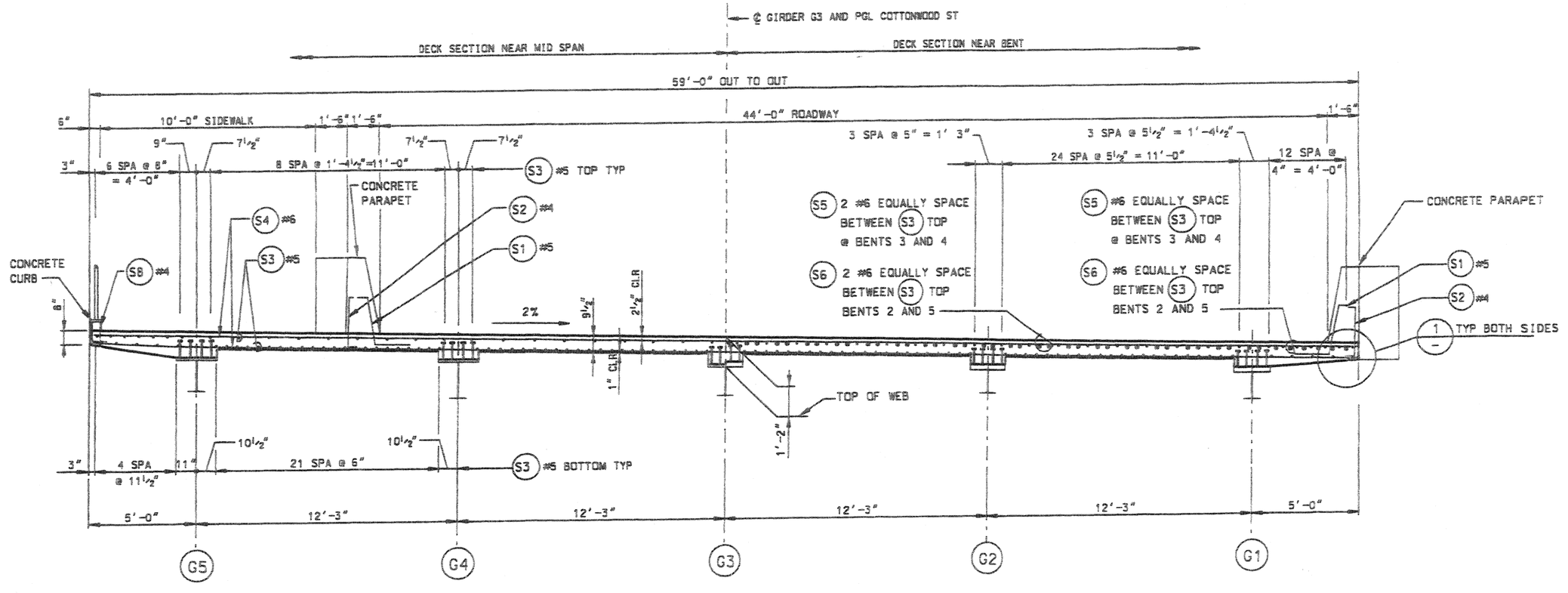

DECK SECTION

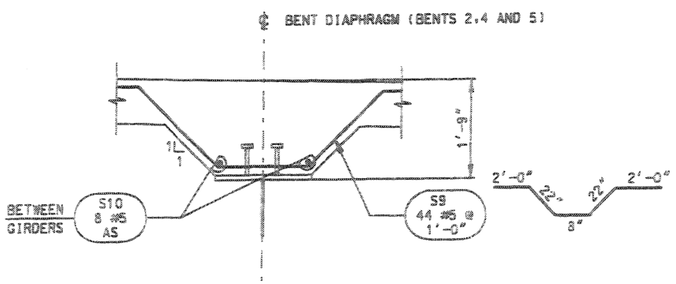

SECTION (A) 36 37 38 39
DECK REINFORCING NOT SHOWN FOR CLARITY

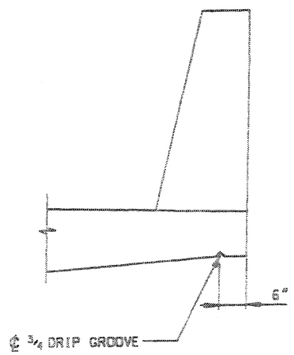

DETAIL (1)
DECK REINFORCING NOT SHOWN FOR CLARITY

DECK SECTION NOTES

1. FOR CONCRETE PARAPET REINFORCEMENT SEE SHEET 43
2. FOR CONCRETE CURB DETAILS SEE SHEET 45.

RELEASE FOR CONSTRUCTION

NO.	DATE	REMARKS

MURRAY CITY CORPORATION
DEPARTMENT OF PUBLIC SERVICES — ENGINEERING DIVISION
4646 SO 500 W. MURRAY UT. 84123 - (801) 270-2400

DESIGN KTF 5/03	CHECK DCO 9/03	APPROVAL RECOM. DATE	SENIOR DESIGN ENGR.
DRAWN TAB 5/03	CHECK DCO 9/03		
QUANT. KTF 5/03	CHECK DCO 9/03	APPROVED DATE	LIGHT BRIDGE ENGR.

COTTONWOOD STREET
OVER UTA AND 5300 SOUTH
DECK SECTION
PROJECT NUMBER * HPP-STP-2148(110)

SALT LAKE COUNTY
C-923 DRG. NO.
SHT. 39 OF 54

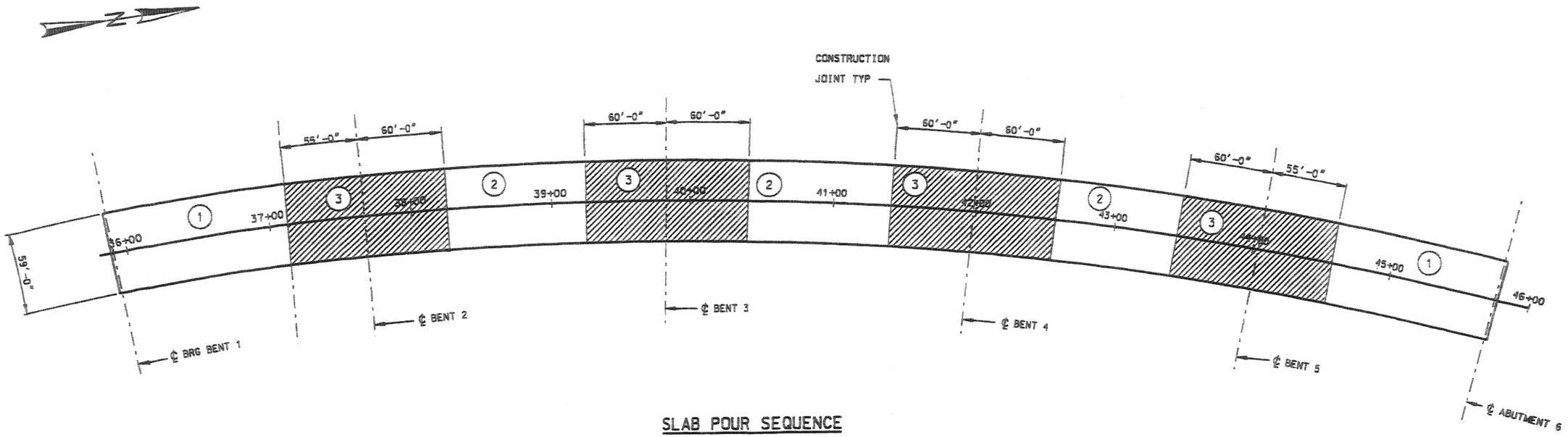

SLAB POUR SEQUENCE

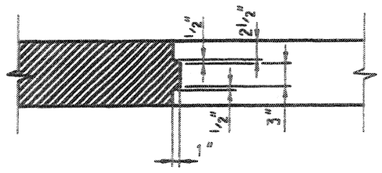

CONSTRUCTION JOINT DETAIL

SLAB POUR SEQUENCE NOTES

1. POUR (1) SECTIONS. POUR (2) SECTIONS A MINIMUM OF 24 HOURS AFTER (1) SECTIONS HAVE BEEN POURED. POUR (3) SECTIONS A MINIMUM OF 24 HOURS AFTER ADJACENT (1) AND (2) SECTIONS HAVE BEEN POURED.

2. AS AN ALTERNATIVE , (1) AND (2) SECTIONS MAY BE POURED CONSECUTIVELY IN SEQUENCE IN ONE DIRECTION ONLY. THE RATE OF POUR SHALL BE SUCH THAT EACH NEW SECTION SHALL BE POURED BEFORE THE PREVIOUSLY POURED ADJACENT SECTION HAS SET.

3. CONTRACTOR SHALL PROVIDE SUFFICIENT MATERIAL.EQUIPMENT AND MANPOWER TO PLACE DECK CONCRETE SUCH THAT THE TIME REQUIRED TO POUR A PARTICULAR SECTION DOES NOT EXCEED TWO (2)HOURS OR UP TO FOUR (4) HOURS WITH THE USE OF APPROVED RETARDER.

RELEASE FOR CONSTRUCTION

NO.	DATE	REMARKS

MURRAY CITY CORPORATION
DEPARTMENT OF PUBLIC SERVICES -- ENGINEERING DIVISION
4646 SO 500 W. MURRAY UT. 84123 - (801) 270-2400

DESIGN KTF 5/03 CHECK DCO 9/03
DRAWN TAB 5/03 CHECK DCO 9/03
QUANT. KTF 5/03 CHECK DCO 9/03

APPROVAL RECOMM. DATE SENIOR DESIGN ENGR.
APPROVED DATE LDOT BRIDGE ENGR.

COTTONWOOD STREET
OVER UTA AND 5300 SOUTH
SLAB POUR SEQUENCE
PROJECT NUMBER * HPP-STP-2148(1)0

SALT LAKE COUNTY
C-923 ORG. NO.
SHT. 40 OF 54

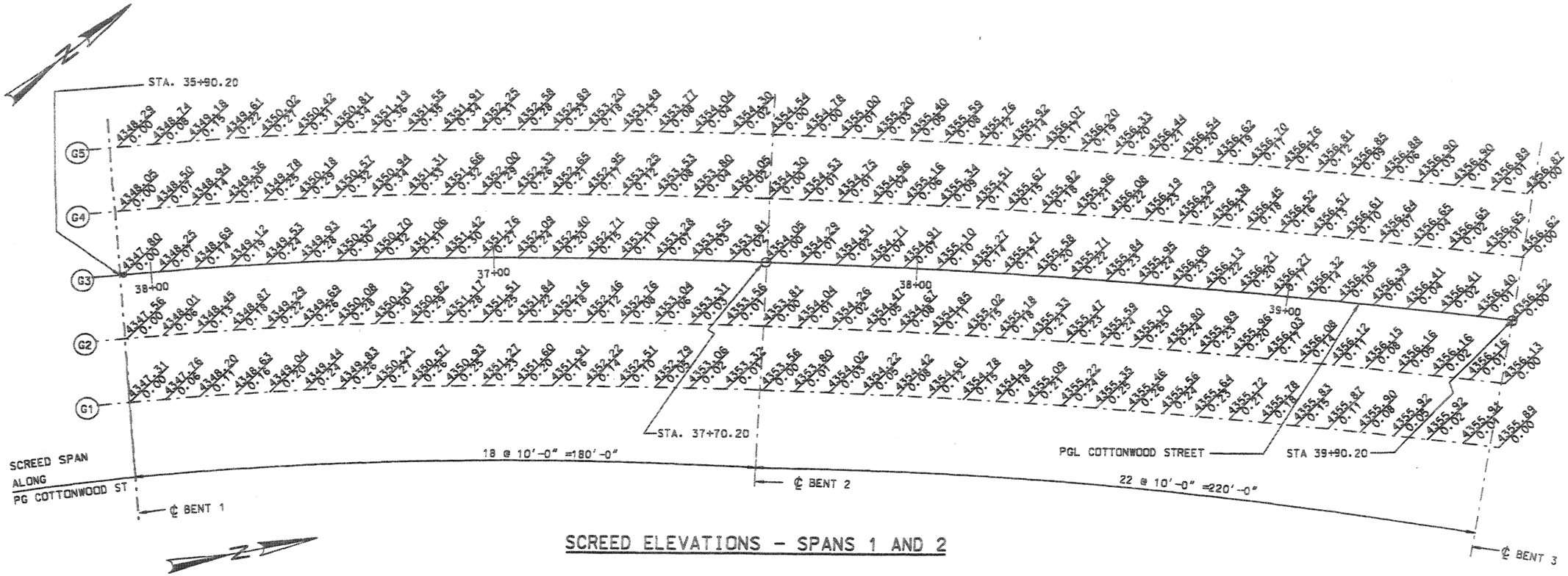

SCREED ELEVATIONS - SPANS 1 AND 2

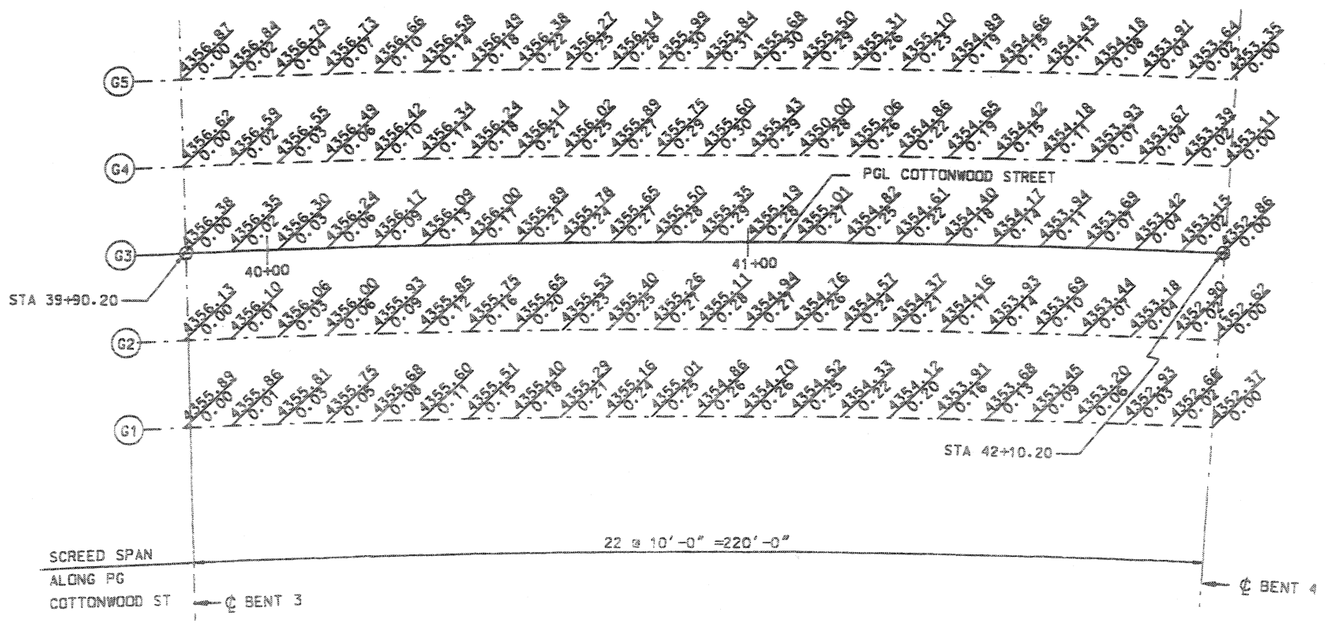

SCREED ELEVATIONS SPAN 3

SCREED ELEVATION NOTES

1. FIGURES ABOVE THE LINE ARE FINISHED GRADE ELEVATIONS IN FEET. FIGURES BELOW THE LINES ARE PROFILE ORDINATES. TO OBTAIN SCREED ELEVATIONS THE PROFILE ORDINATE VALUES SHALL BE ADDED TO THE FINISHED GRADE ELEVATIONS.
2. ALL DIMENSIONS ARE ALONG THE CONTROL LINE AND ARE IN FEET AND INCHES.
3. ALL GIRDERS ARE PARALLEL TO THE CONTROL LINE.

RELEASE FOR CONSTRUCTION

NO.	DATE	REMARKS

MURRAY CITY CORPORATION
DEPARTMENT OF PUBLIC SERVICES -- ENGINEERING DIVISION
4646 SO 500 W. MURRAY UT. 84123 - (801) 270-2400

DESIGN	K.T.F.	5/03	CHECK DCD 9/03
DRAWN	T.A.B.	5/03	CHECK DCD 9/03
QUANT.	K.T.F.	5/03	CHECK DCD 9/03

APPROVAL RECOMM. — SENIOR DESIGN ENGR. — DATE
APPROVED — CONST. ENGR. — DATE

COTTONWOOD STREET
OVER UTA AND 5300 SOUTH
SCREED ELEVATIONS 1
PROJECT NUMBER * HPP-STP-2148(1)0

SALT LAKE COUNTY
C-923 DRG. NO.
SHT. 41 OF 54

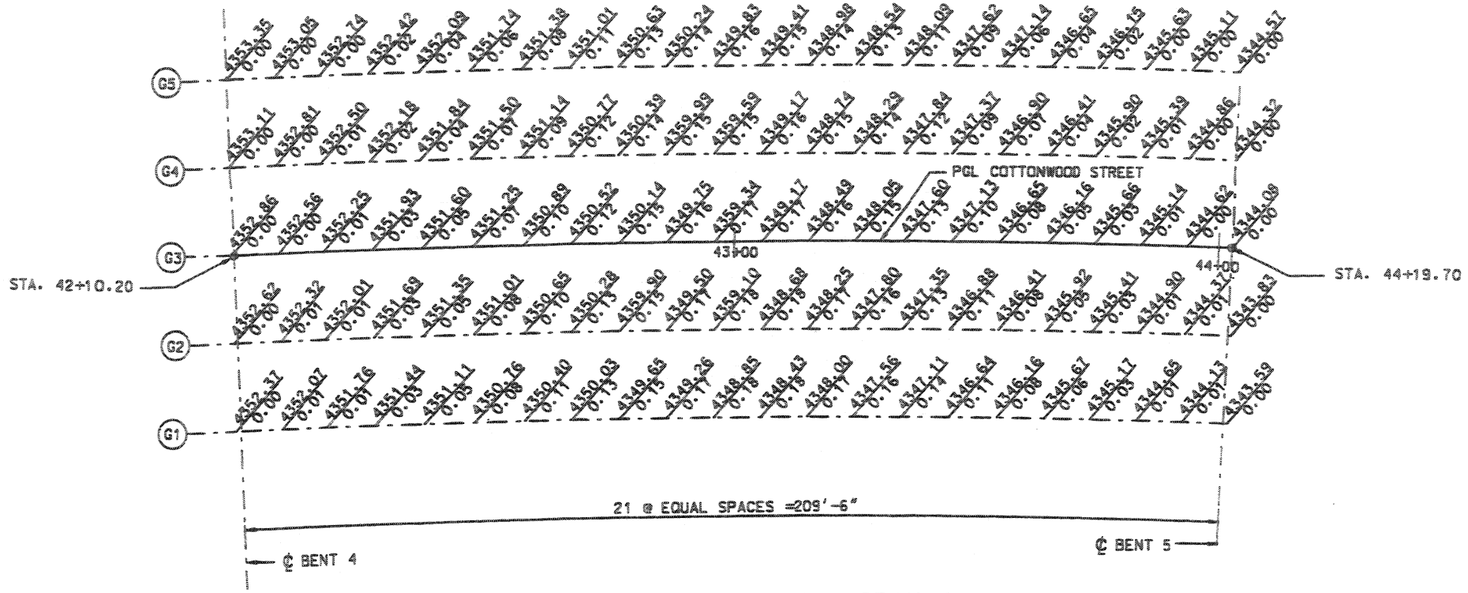

SCREED ELEVATIONS - SPAN 4

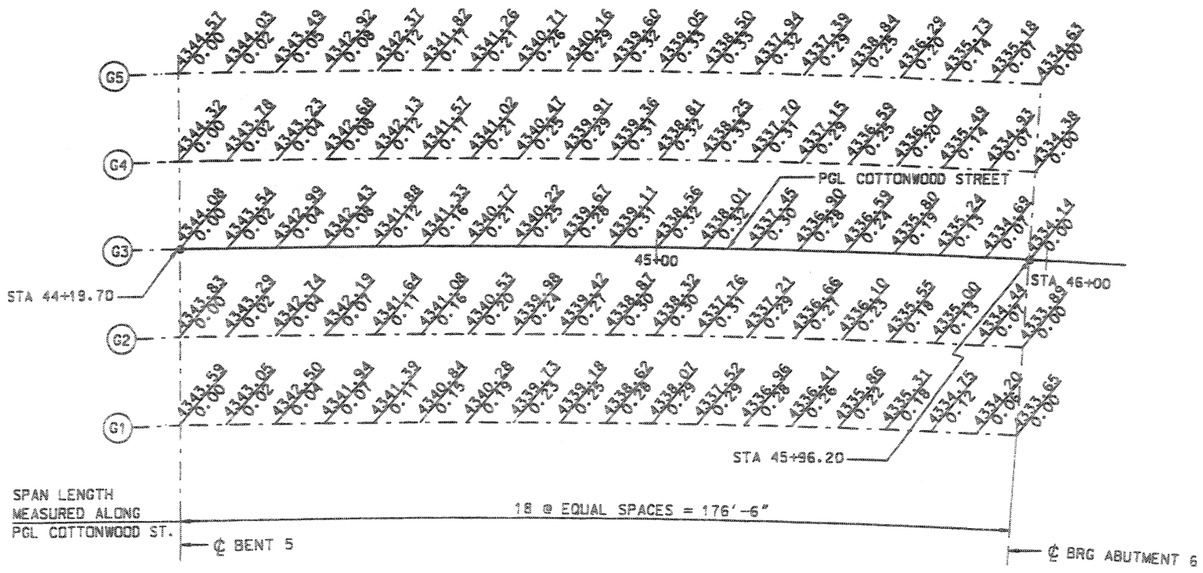

SCREED ELEVATIONS - SPAN 5

NOTES

1. FOR SCREED ELEVATION NOTES, SEE SCREED ELEVATION SHEET 41.

RELEASE FOR CONSTRUCTION

NO.	DATE	REMARKS

MURRAY CITY CORPORATION
DEPARTMENT OF PUBLIC SERVICES — ENGINEERING DIVISION
4646 SO 500 W. MURRAY UT. 84123 - (801) 270-2400

DESIGN KTF 5/03 CHECK DCO 9/03
DRAWN TAB 5/03 CHECK DCO 9/03
QUANT. KTF 5/03 CHECK DCO 9/03

APPROVAL RECOMM. — SENIOR DESIGN ENGR. — DATE
APPROVED — HIGHWAY ENGR. — DATE

COTTONWOOD STREET
OVER UTA AND 5300 SOUTH

SCREED ELEVATIONS 2

PROJECT NUMBER * HPP-STP-2148(1)0

SALT LAKE
COUNTY

C-923
DRG. NO.

SHT. 42 OF 54

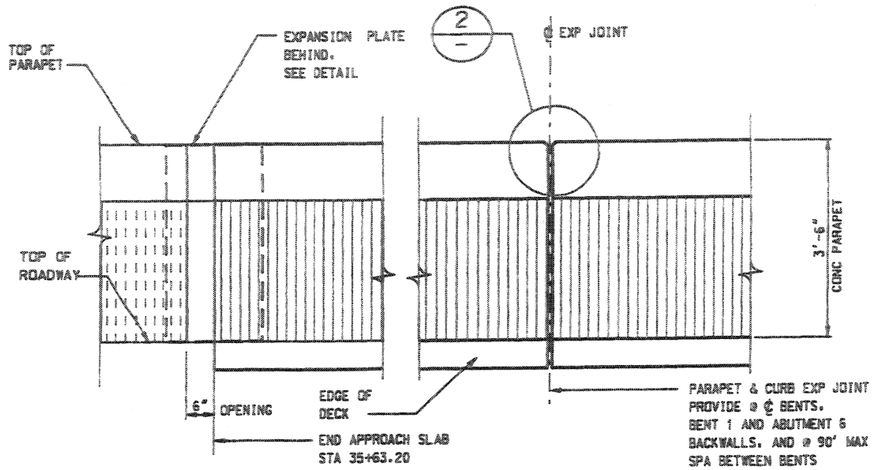

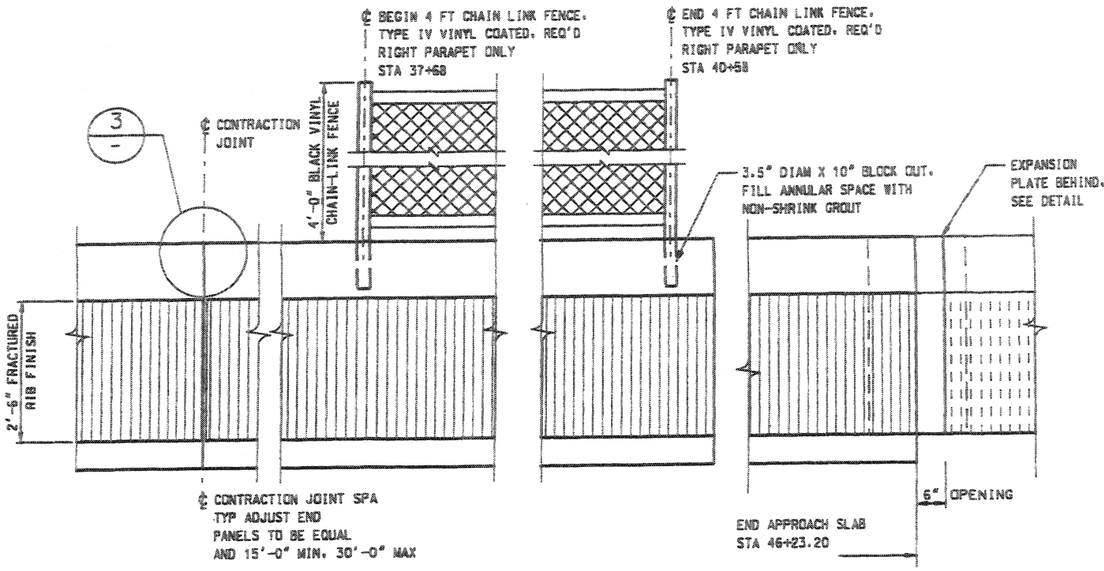

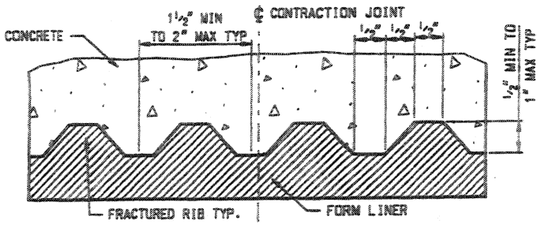

GROOVED PATTERN SURFACE FINISH DETAIL

SUBMIT FORM LINER TO ENGINEER FOR APPROVAL

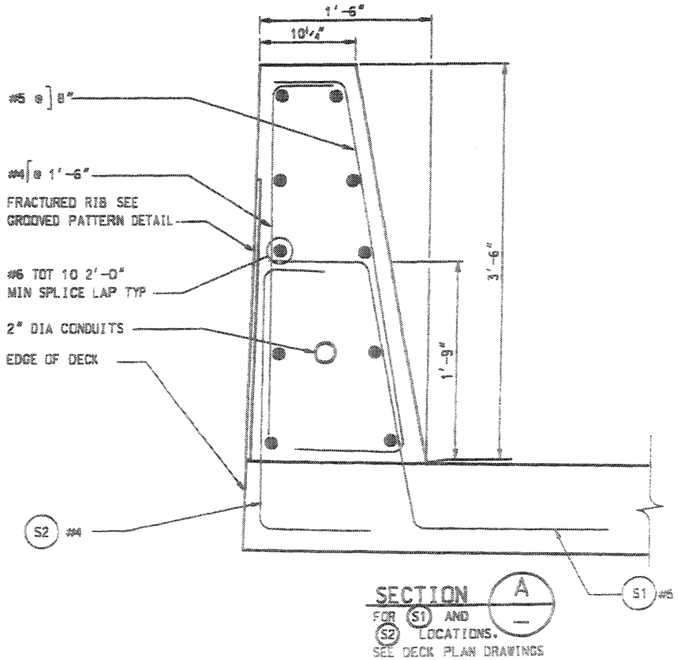

ELEVATION – CONCRETE PARAPET

RIGHT PARAPET SHOWN LEFT PARAPET SIMILAR

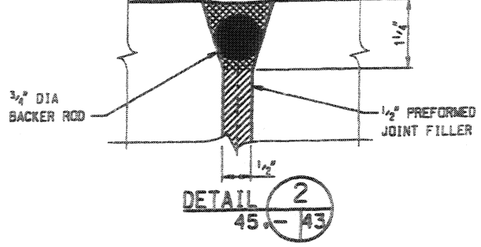

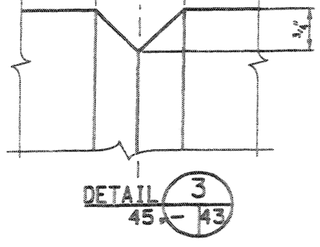

CONCRETE PARAPET NOTES

1. ALTERNATE ALL REINFORCING STEEL SPLICES.
2. PROVIDE 2" MIN COVER TO REINFORCING STEEL UNLESS NOTED OTHERWISE.
3. PLACE CONTRACTION JOINT ON SIDES AND TOP OF PARAPET.
4. EXTEND SEALANT AND FOAM BACKER ROD FROM DECK TO TOP OF PARAPET ON THE INSIDE PARAPET FACE, ACROSS TOP OF PARAPET, AND TO TOP OF FRACTURE FIN.
5. FOR ORNAMENTAL FENCE DETAILS AND LAYOUT, SEE SHEET 45.

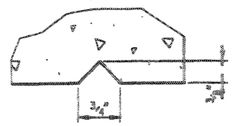

TYPICAL SECTION THRU BRIDGE NUMBER

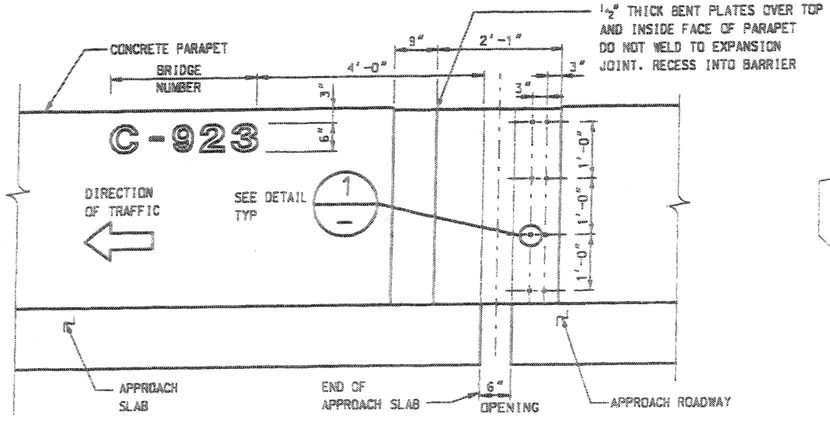

BRIDGE NUMBER DETAIL AND EXPANSION PLATE DETAIL

PROVIDE NUMBER ON RIGHT END APPROACH PARAPET AT BENT 1 AND ABUTMENT 6 AT BEGINNING OF BRIDGE LOOKING IN DIRECTION OF TRAFFIC. EXP JT AT END APPROACH SLAB BENT 1 AND ABUTMENT 6

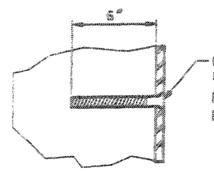

DETAIL 1

QUANTITIES STRUCTURAL CONCRETE AA(AE)	
LEFT PARAPET	160.1 CY
RIGHT PARAPET	160.1 CY
TOTAL	320.2 CY

RELEASE FOR CONSTRUCTION

NO.	DATE	REMARKS

MURRAY CITY CORPORATION
DEPARTMENT OF PUBLIC SERVICES — ENGINEERING DIVISION
4646 SO 500 W, MURRAY UT, 84123 – (801) 270-2400

DESIGN KTF 5/03	CHECK DCO 9/03
DRAWN TAB 5/03	CHECK DCO 9/03
QUANT. KTF 5/03	CHECK DCO 9/03

APPROVAL RECOMM. — SENIOR DESIGN ENGR. — DATE
APPROVED — UDOT BRIDGE ENGR. — DATE

COTTONWOOD STREET
OVER UTA AND 5300 SOUTH

CONCRETE PARAPET DETAILS

PROJECT NUMBER * HPP-STP-2148(1)0

SALT LAKE COUNTY

C-923 DRG. NO.

SHT. 43 OF 56

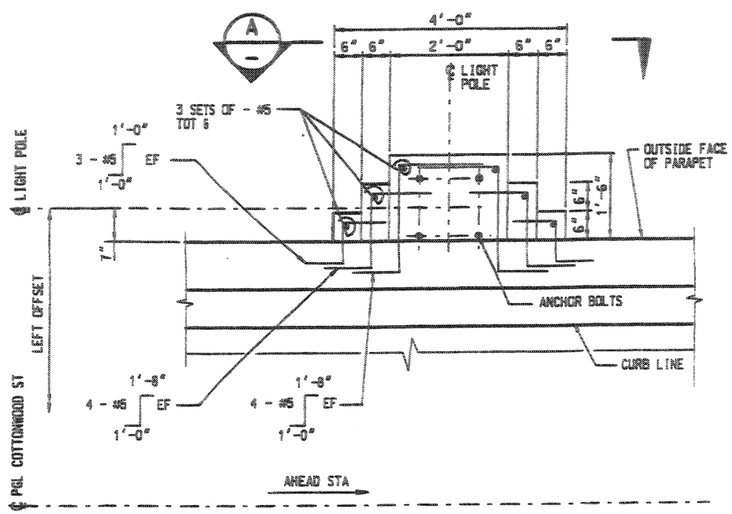

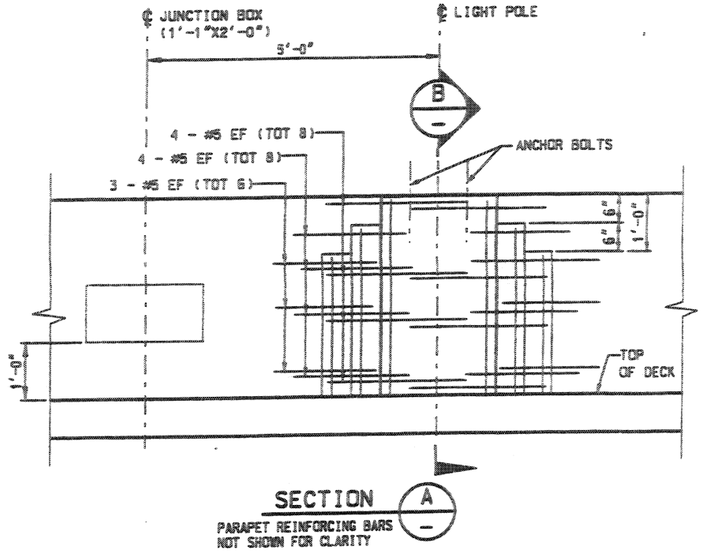

SECTION A

PARAPET REINFORCING BARS NOT SHOWN FOR CLARITY

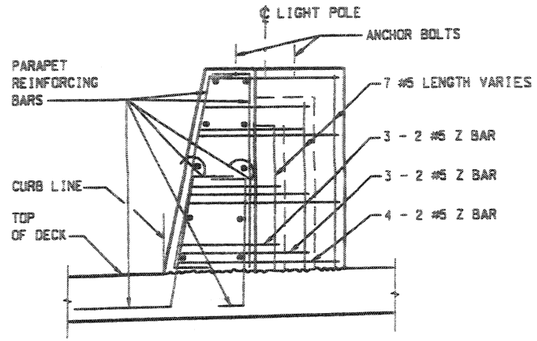

SECTION B

DECK REINFORCING BARS NOT SHOWN FOR CLARITY

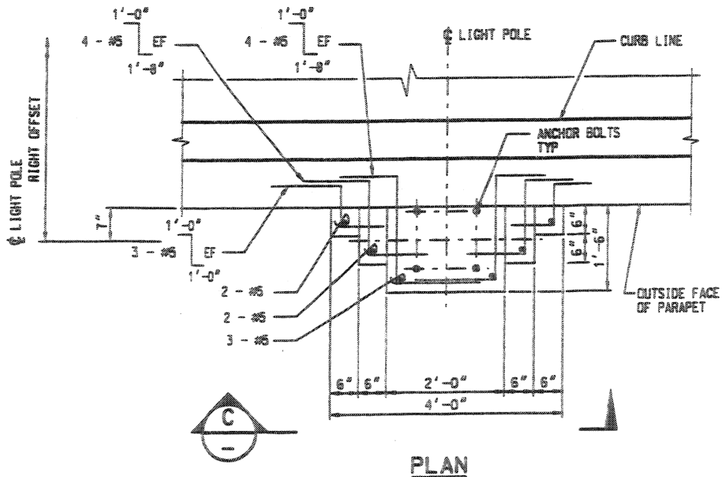

PLAN

PARAPET REINFORCING NOT SHOWN FOR CLARITY

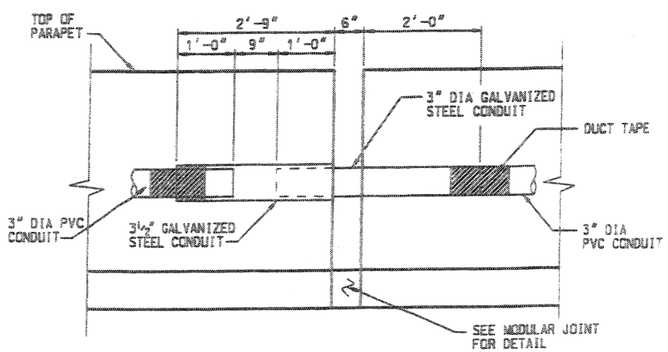

CONDUIT EXPANSION JOINT DETAIL

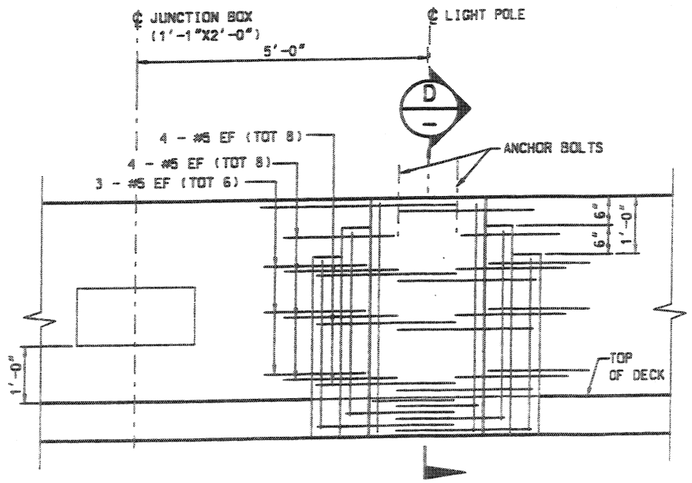

SECTION C

PARAPET REINFORCING BARS NOT SHOWN FOR CLARITY

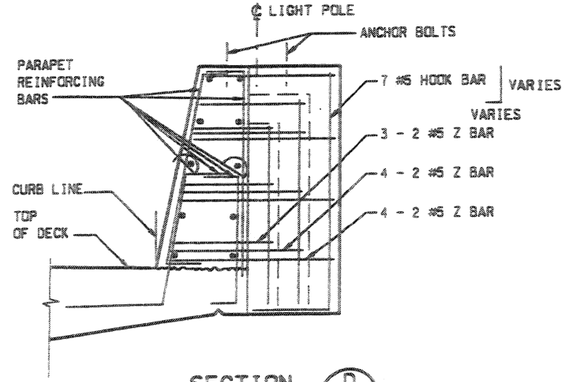

SECTION D

DECK REINFORCING BARS NOT SHOWN FOR CLARITY

LIGHT POLE SCHEDULE		
PGL COTTONWOOD STATION	LEFT OFFSET	RIGHT OFFSET
37+40	18.08'	30.08'
39+40	18.08'	30.08'
41+20	18.08'	30.08'
43+00	18.08'	30.08'
44+80	18.08'	30.08'

NOTES

1. USE ANCHOR BOLT RECOMENDED BY THE MANUFACTURER.
2. USE SCHEDULE D FOR CONDUIT.
3. USE STANDARD PIPE FOR STEEL CONDUIT.

RELEASE FOR CONSTRUCTION

NO.	DATE	REMARKS

MURRAY CITY CORPORATION
DEPARTMENT OF PUBLIC SERVICES — ENGINEERING DIVISION
4646 SO 500 W, MURRAY UT, 84123 — (801) 270-2400

DESIGN KTF 5/03 CHECK DCO 9/03
DRAWN TAB 5/03 CHECK DCO 9/03
QUANT. KTF 5/03 CHECK DCO 9/03

APPROVAL RECOMM. — SENIOR DESIGN ENGR. — DATE
APPROVED — UDOT BRIDGE ENGR. — DATE

COTTONWOOD STREET
OVER UTA AND 5300 SOUTH

ELECTRICAL DETAILS

PROJECT NUMBER * HPP-STP-2148(11)0

SALT LAKE COUNTY

C-923 DRG. NO.

SHT. 44 OF 54

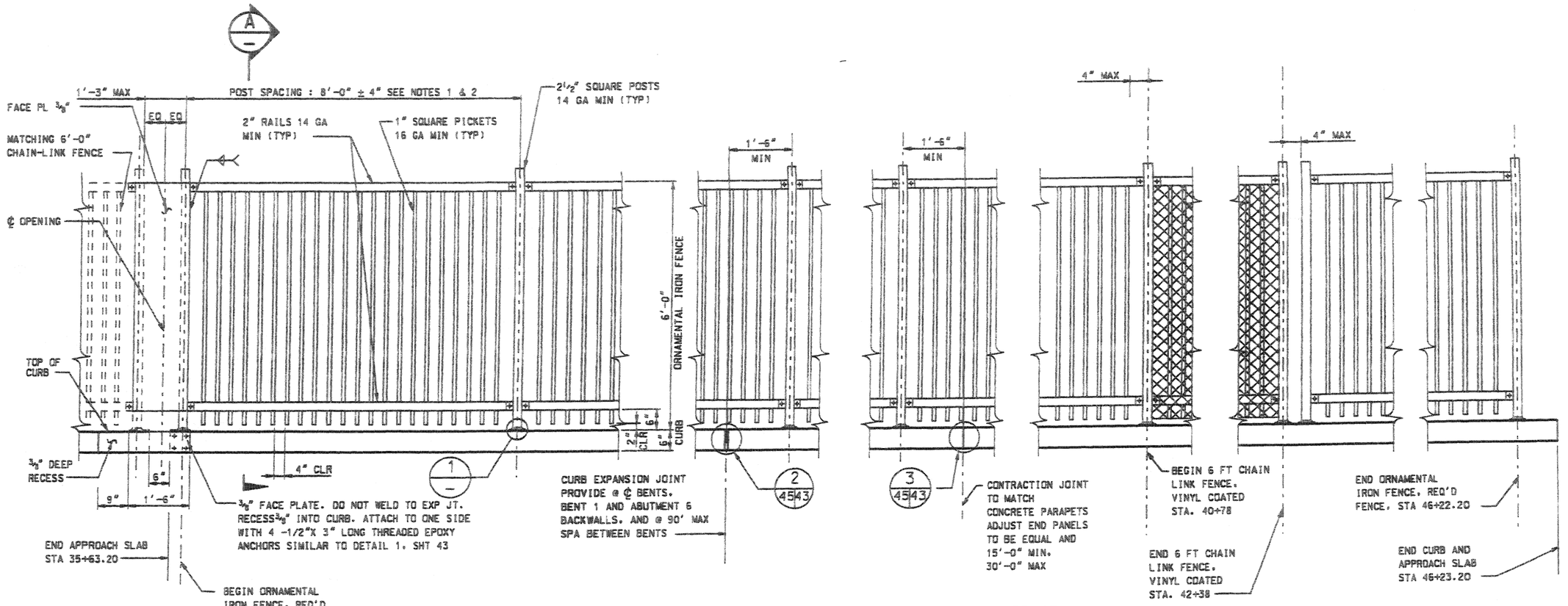

ELEVATION - SIDEWALK CURB AND ORNAMENTAL FENCE

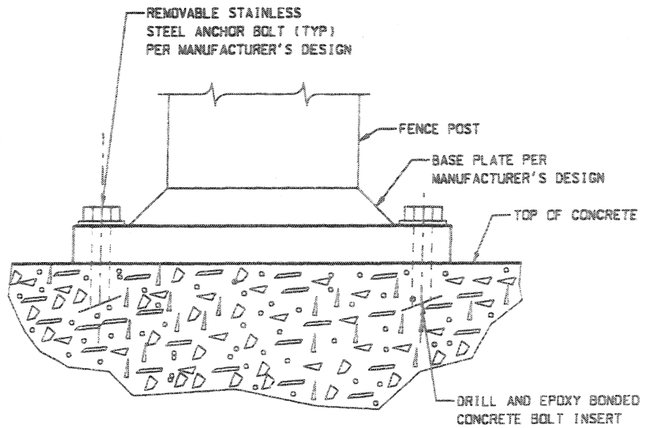

DETAIL 1

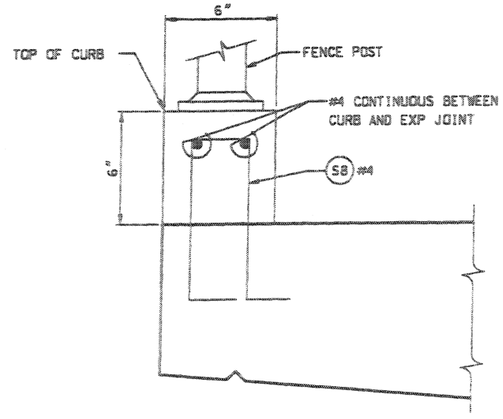

SECTION A

FENCE NOTES

1. VARY DIMENSION TO MEET ORNAMENTAL FENCE MANUFACTURER'S POST SPACING AND CONTROLLING SPACING DIMENSIONS.
2. PAY FOR ORNAMENTAL FENCE BASED ON 4'-0" AND 6'-0" PAY LIMITS SHOWN IN ELEVATION. ANY CHANGES TO FENCE LENGTH BECAUSE OF CHOSEN MANUFACTURER'S ACTUAL POST SPACING IS THE CONTRACTOR'S EXPENSE.
3. FENCE SHALL PROVIDE FOR EXPANSION AND CONTRACTION MOVEMENTS MATCHING JOINTS SHOWN ON SHEET 43 .
4. FENCE SHALL MEET AASHTO CRITERIA FOR PEDESTRIAN LOADING.
5. FENCE SHALL MEET ALL ADA AND OSHA REQUIREMENTS INCLUDING, BUT NOT LIMITED TO OPENINGS AND COMPONENT SIZES.

QUANTITIES STRUCTURAL CONCRETE AA(AE)	
CURB	5.8 CY

RELEASE FOR CONSTRUCTION

NO.	DATE	REMARKS

MURRAY CITY CORPORATION
DEPARTMENT OF PUBLIC SERVICES -- ENGINEERING DIVISION
4646 SO 500 W. MURRAY UT, 84123 - (801) 270-2400

DESIGN	KTF	5/03	CHECK	DCO	9/03
DRAWN	TAB	5/03	CHECK	DCO	9/03
QUANT.	KTF	5/03	CHECK	DCO	9/03

SENIOR DESIGN ENGR. — DATE — APPROVAL RECOMM. — DATE
UDOT ENGINEER — DATE — APPROVED

COTTONWOOD STREET
OVER UTA AND 5300 SOUTH
SIDEWALK, CURB AND FENCE
PROJECT NUMBER * HPP-STP-2148(110)

SALT LAKE COUNTY
C-923 DRG. NO.
SHT. 45 OF 54

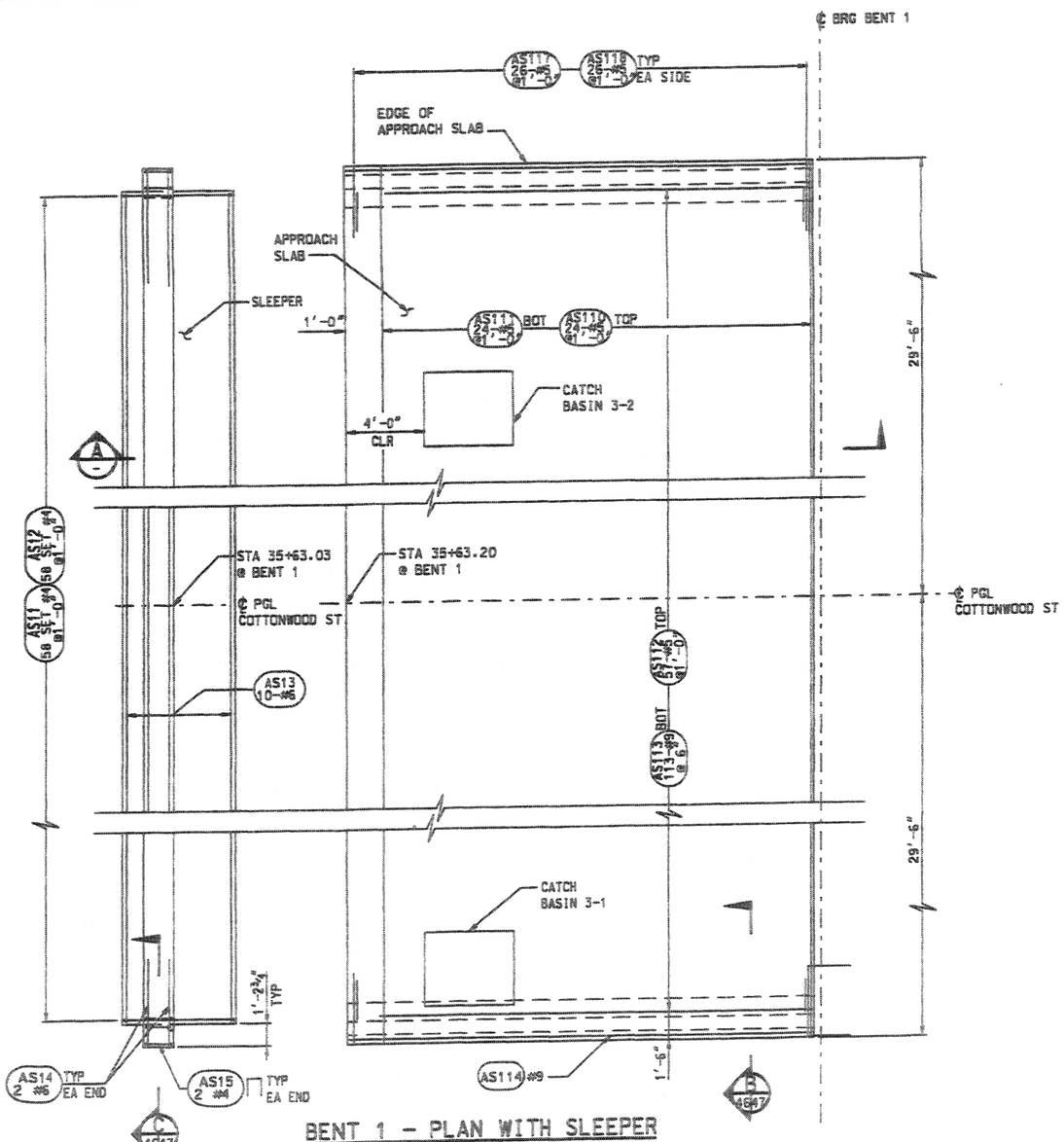

BENT 1 - PLAN WITH SLEEPER

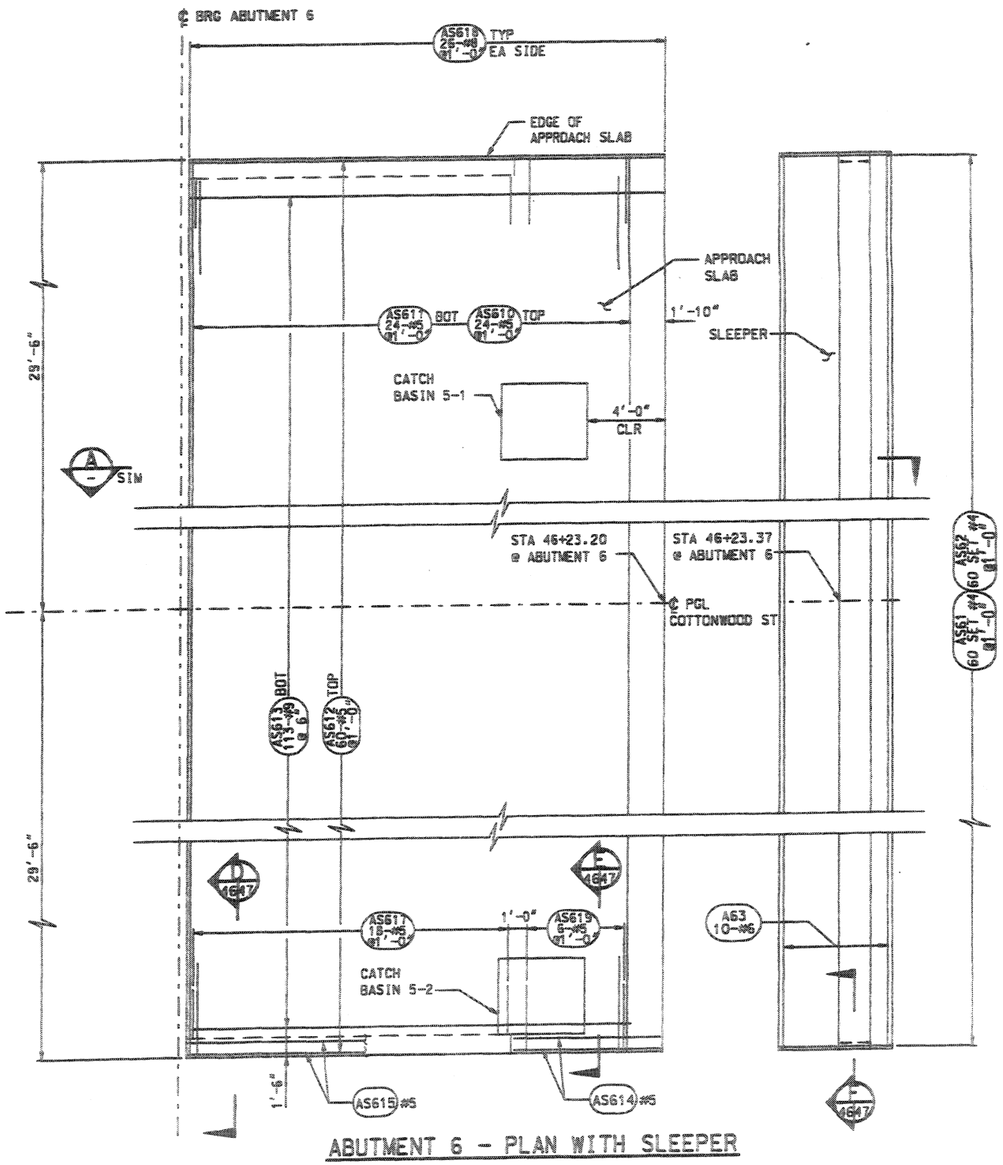

ABUTMENT 6 - PLAN WITH SLEEPER

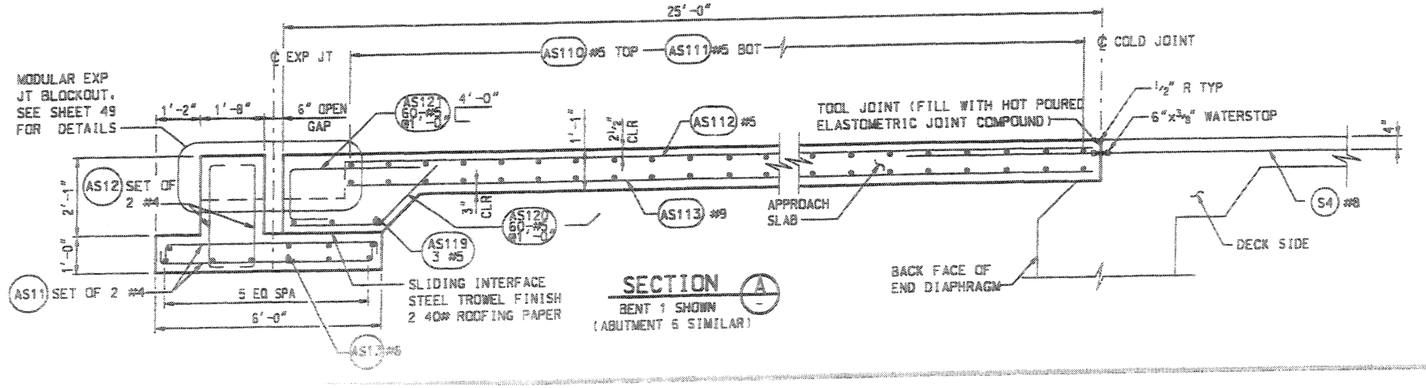

SECTION A
BENT 1 SHOWN
(ABUTMENT 6 SIMILAR)

QUANTITIES
STRUCTURAL CONCRETE 3A(AE)

	BENT 1	ABUTMENT 6
APPROACH SLAB	69.7 CU YD	67.5 CU YD
SLEEPER	20.7 CU YD	20.7 CU YD
TOTAL	178.5 CU YD	

RELEASE FOR CONSTRUCTION

NO.	DATE	REMARKS

MURRAY CITY CORPORATION
DEPARTMENT OF PUBLIC SERVICES — ENGINEERING DIVISION
4646 SO 500 W, MURRAY UT. 84123 — (801) 270-2400

DESIGN KTF 5/03 CHECK DCO 9/03
DRAWN ENG 5/03 CHECK DCO 9/03
QUANT. KTF 5/03 CHECK DCO 9/03

APPROVAL RECOMM. — DATE — SENIOR DESIGN ENGR.
APPROVED — DATE — LIGHT BRIDGE ENGR.

COTTONWOOD STREET
OVER UTA AND 5300 SOUTH
APPROACH SLAB

PROJECT NUMBER * HPP-STP-2148(110

SALT LAKE COUNTY

C-923
DRG. NO.

SHT. 46 OF 94

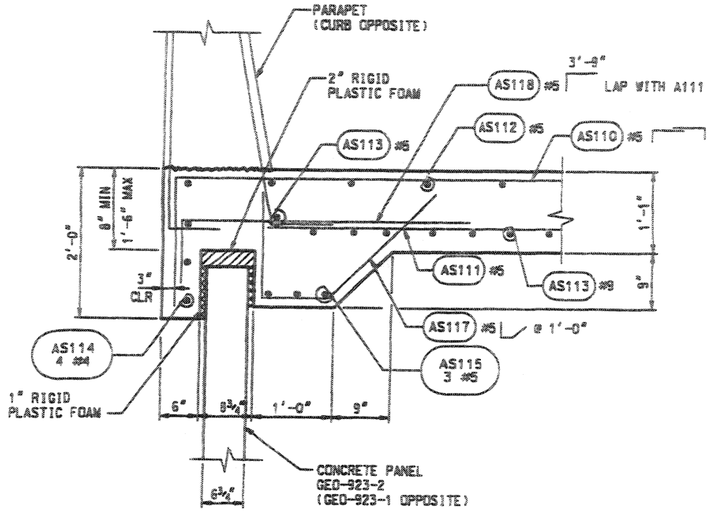

SECTION B (6|4)
AT GEO-923-1
& GEO-923-2

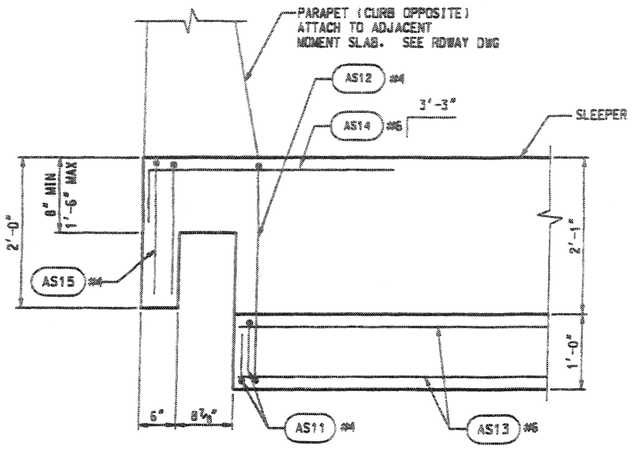

SECTION C (6|4)
AT SLEEPER

NOTES

1. REINFORCING SPACING IS ORTHOGONAL TO PGL COTTONWOOD ST.
2. CUT AND ADJUST REINFORCING AT APPROACH SLAB DRAINS. SEE SHEET 49.
3. SEE SHEET 43 FOR TYPICAL PARAPET SECTIONS AND LOCATIONS OF PARAPETS.
4. SEE SHEET 24 FOR APPROACH SLAB/ FINWALL INTERFACE.
5. SEE SHEETS 36 THROUGH 38 FOR DECK STEEL IN THE APPROACH SLAB.

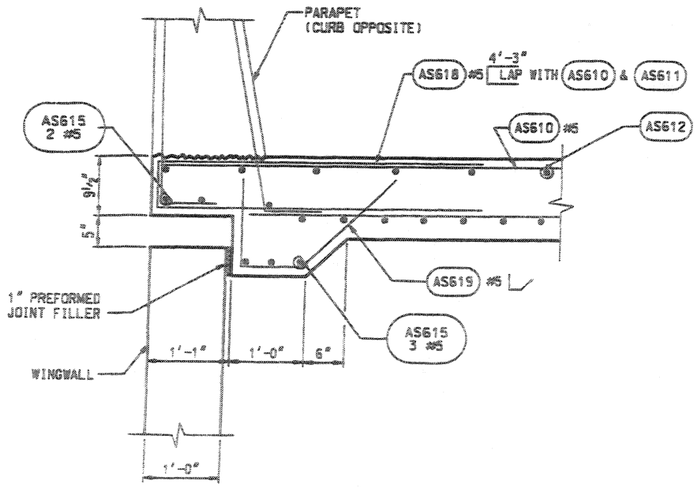

SECTION D (6|4)
AT WINGWALL

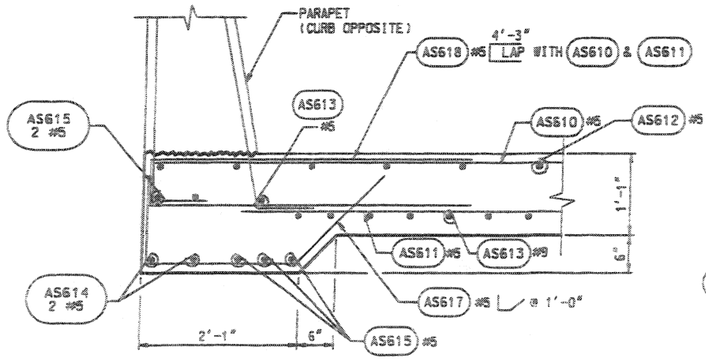

SECTION E (6|4)
BEYOND WINGWALL

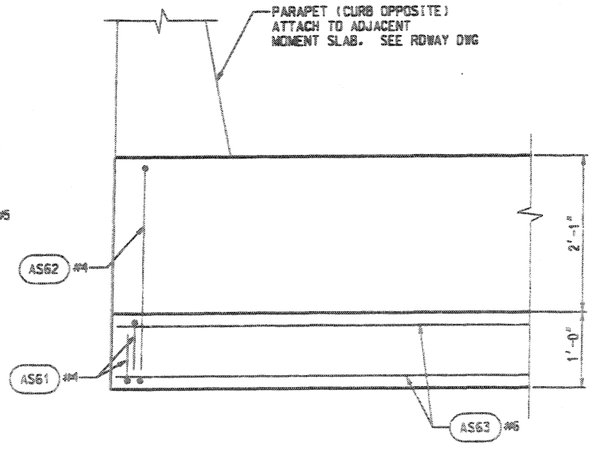

SECTION F (6|4)
AT SLEEPER

RELEASE FOR CONSTRUCTION

NO.	DATE	REMARKS

MURRAY CITY CORPORATION
DEPARTMENT OF PUBLIC SERVICES — ENGINEERING DIVISION
4646 SO 500 W. MURRAY UT. 84123 - (801) 270-2400

APPROVAL RECOMM. — DATE — SENIOR DESIGN ENGR.
APPROVED — DATE — HIGHWAY ENGR.

DESIGN	KTF	5/03	CHECK DCO 9/03
DRAWN	TAB	5/03	CHECK DCO 9/03
QUANT.	KTF	5/03	CHECK DCO 9/03

COTTONWOOD STREET
OVER UTA AND 5300 SOUTH
DETAILS

PROJECT NUMBER * HPP-STP-2148(110

SALT LAKE
COUNTY

C-923
DRG. NO.

SHT. 47 OF 54

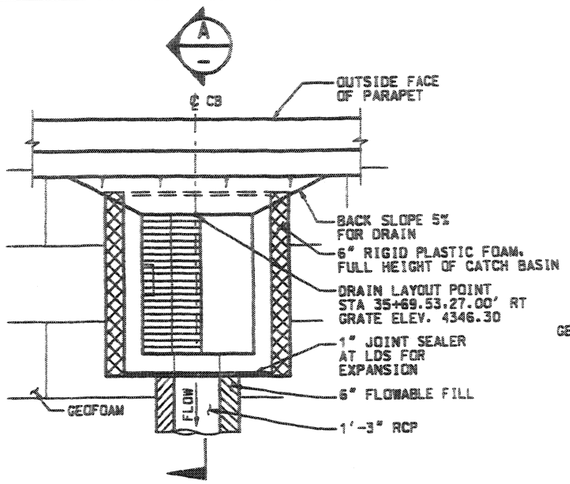

PLAN: CATCH BASIN 3-1

LINE 7 SEE NOTE 3

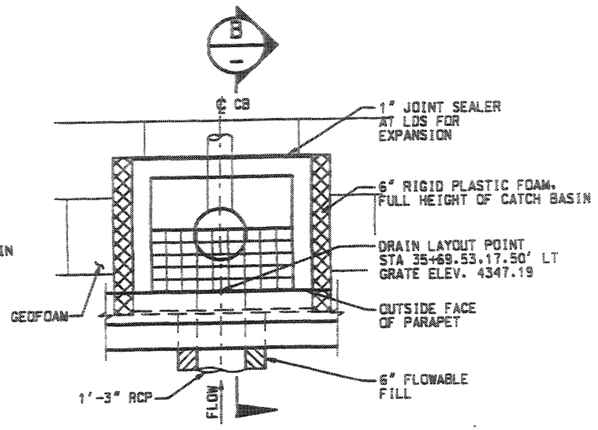

PLAN: CATCH BASIN 3-2

LINE 11 SEE NOTE 3

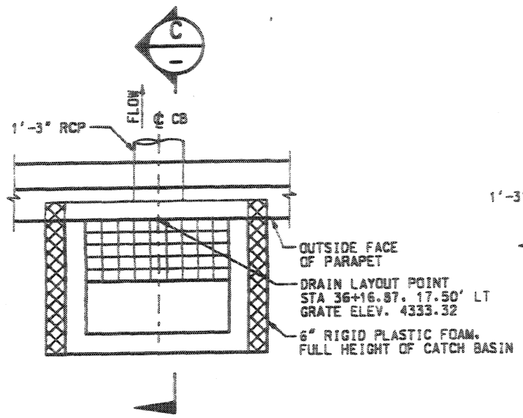

PLAN: CATCH BASIN 5-1

LINE 7 SEE NOTE 3

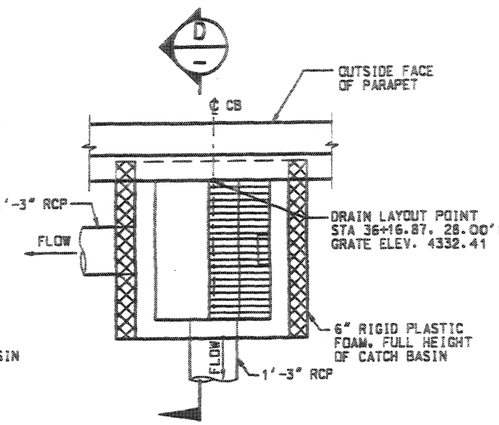

PLAN: CATCH BASIN 5-2

LINE 7 SEE NOTE 3

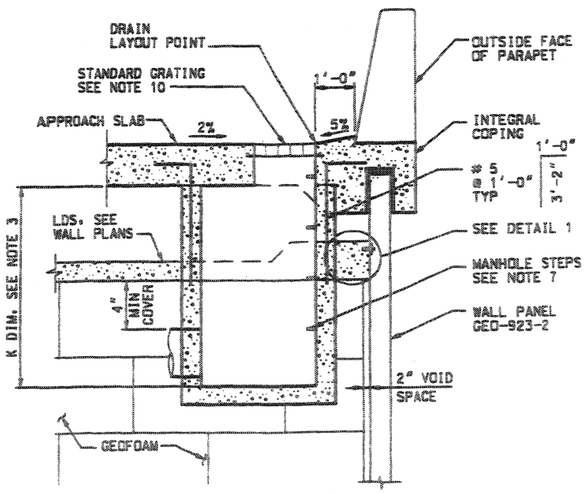

SECTION A

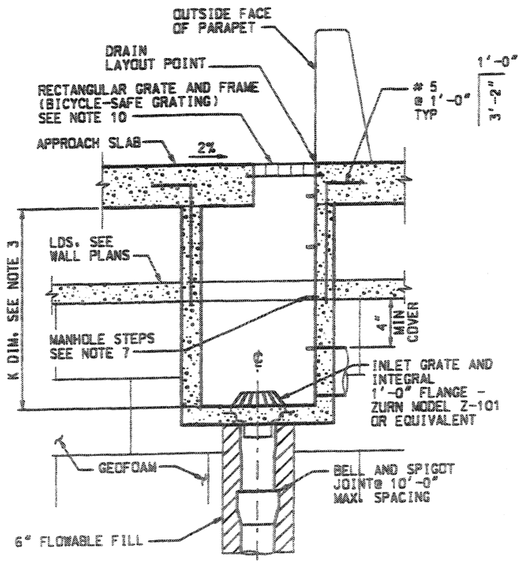

SECTION B

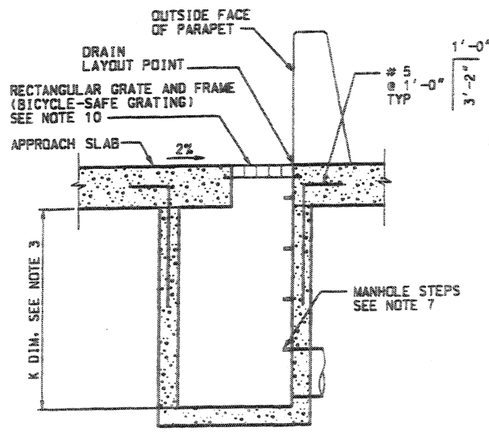

SECTION C

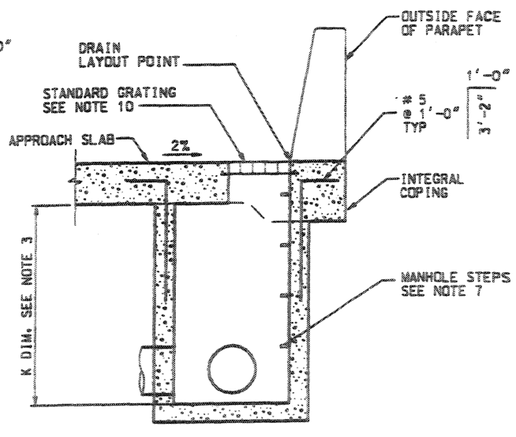

SECTION A

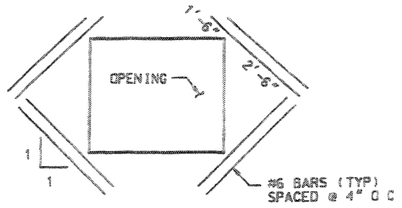

TYPICAL ADDITIONAL REINFORCING AROUND OPENING

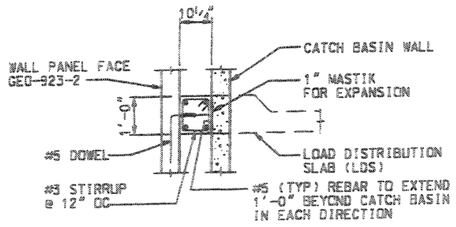

DETAIL 1

GENERAL NOTES

1. USE STRUCTURAL STEEL CONFORMING TO AASHTO M-270, GRADE 36.
2. GALVANIZE ALL STRUCTURAL STEEL AFTER FABRICATION.
3. USE DRAIN STRUCTURE CONFORMING TO UDOT STD DWG CB 9A THROUGH CB 9C. COLUMN "A", LINE X (SEE PLAN VIEW). REPLACE THE STANDARD TOP SLAB OF THE CATCH BASIN WITH THE APPROACH SLAB. ADJUST DIMENSION K DUE TO THICKEN TOP SLAB.
4. CATCH BASIN MAY BE CAST IN PLACE OR PRECAST. PRECAST CATCH BASIN REQUIRES RUBBER BOOT. CONTRACTOR SHALL SUBMITPROPOSED ALTERATIONS TO ENGINEER FOR APPROVAL
5. FOR PIPE INVERT ELEVATIONS AND CONNECTIVITIES. SEE ROADWAY DRAINAGE PLANS.
6. EXCEPT AS NOTED, MATCH GRATE AND FRAME TO ROADWAY PROFILE AND CROSS-SLOPE.
7. FIELD CUT OR FIELD BEND APPROACH SLAB REINFORCING TO CLEAR APPROACH SLAB DRAINS.
8. EQUALLY SPACE MANHOLE STEPS (MAXIMUM SPACING OF 1'-4"). SEE UDOT STD DWG V-1706.
9. FILL AREA BETWEEN DOWN DRAIN AND GEOFOAM WITH TYPE B FLOWABLE FILL TO SECURE PIPE.
10. SEE STD DWG GF 3 FOR GRATE AND FRAME DETAILS.
11. EXERCISE CARE WHEN TRANSPORTING OR PLACING PRE-CAST UNITS TO AVOID DAMAGE OR MISALIGHNMENT.
12. FOR 1'-0" DOWNDRAIN PIPE, USE D&L SUPPLY GRATE ONLY (MODEL C-2815 OR APPROVED EQUAL). BRING 1'-0" PIPE THROUGH THE BOX BASE.
13. ALL STEEL FOR FRAME AND GRATE IS INCIDENTAL TO STRUCTURAL STEEL
14. DESIGN DATA

    FOR LIVE LOAD AND REINFORCING STEEL CRITERIA, SEE GENERAL NOTES OF SITUATION AND LAYOUT 1.

    STRUCTURAL STEEL: fy = 36 KSI

RELEASE FOR CONSTRUCTION

NO.	DATE	REMARKS

MURRAY CITY CORPORATION
DEPARTMENT OF PUBLIC SERVICES — ENGINEERING DIVISION
4646 SO 500 W, MURRAY UT, 84123 - (801) 270-2400

DESIGN KTF 5/03	CHECK DCO 9/03
DRAWN TAB 5/03	CHECK DCO 9/03
QUANT. KTF 5/03	CHECK DCO 9/03

APPROVAL RECOMMEND — SENIOR DESIGN ENGR. — DATE
APPROVED — UDOT BRIDGE ENGR. — DATE

COTTONWOOD STREET
OVER UTA AND 5300 SOUTH
APPROACH SLAB DRAIN

PROJECT NUMBER * HPP-STP-2148(110)

SALT LAKE COUNTY

C-923 DRG. NO.

SHT. 49 OF 54

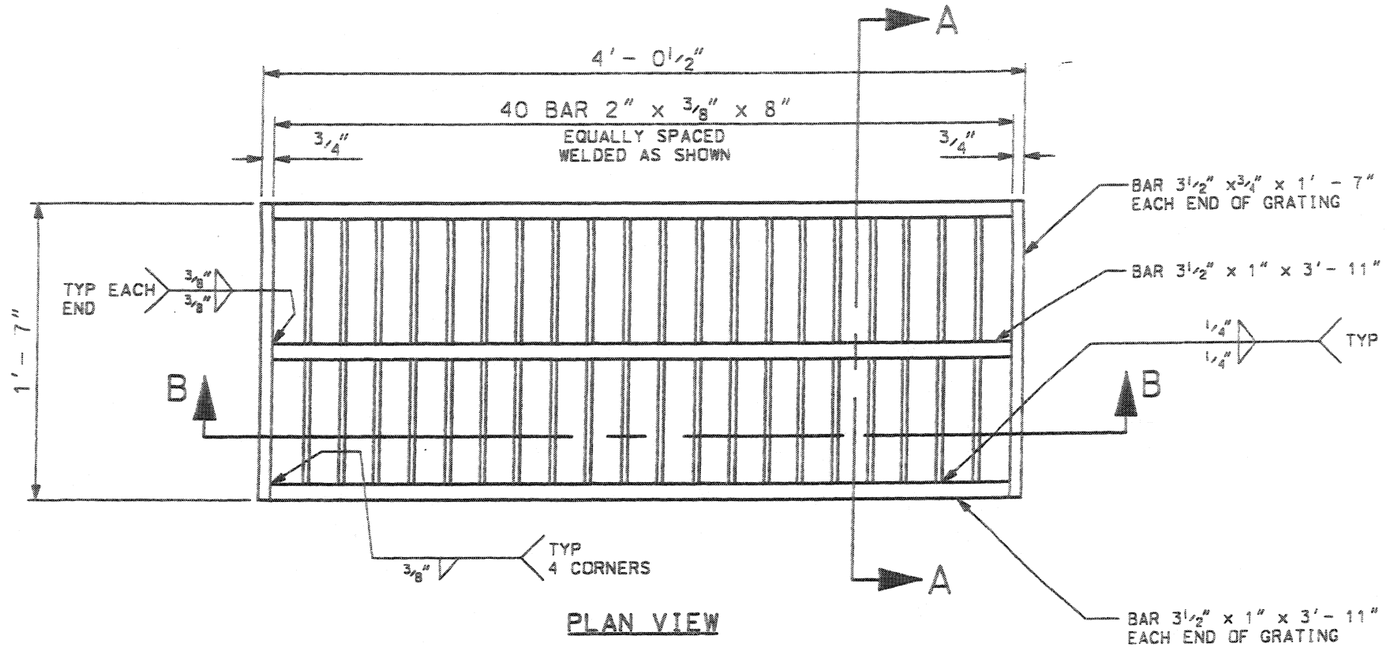

PLAN VIEW

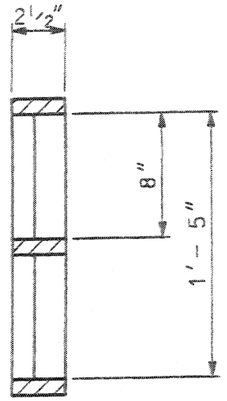

SECTION A-A

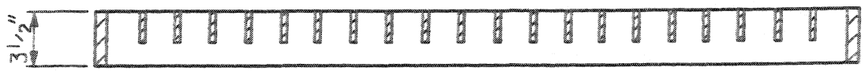

SECTION B-B

SPECIAL GRATE: 1' - 7" x 4' - 0 1/2"

GRATE WEIGHT: 240.0 LBS

TURNED GRATE DETAIL

NTS

GENERAL NOTES :

1. GRATING AND FRAME SHALL BE HOT-DIP GALVANIZED AFTER FABRICATION IN ACCORDANCE WITH AASHTO DESIGNATION M-11 (ASTM A-123).
2. STRUCTURAL STEEL GRATING SHALL BE STRUCTURAL CARBON STEEL CONFORMING TO AASHTO DESIGNATION M-270, GRADE 36 (ASTM A 709 GRADE 36).
3. ALL JOINTS REQUIRE 1/4" CONTINUOUS FILLET WELD UNLESS NOTED OTHERWISE.

DESIGN DATA :

MS 18 (HS-20) OR INTERSTATE ALTERNATE LOADING IN ACCORDANCE WITH CURRENT AASHTO AND INTERIM SPECIFICATIONS.

STRUCTURAL STEEL: fs = 20,000 psi

RELEASE FOR CONSTRUCTION

NO.	DATE	REMARKS

MURRAY CITY CORPORATION
DEPARTMENT OF PUBLIC SERVICES — ENGINEERING DIVISION
4646 SO 500 W, MURRAY UT, 84123 - (801) 270-2400

DESIGN MS 9/03 CHECK DGD 9/03
DRAWN MS 9/03 CHECK ES 9/03
QUANT. MS 9/03 CHECK DGD 9/03

APPROVAL RECOMM. — DATE — SENIOR DESIGN ENGR.
APPROVED — DATE — LIGHT BRIDGE ENGR.

COTTONWOOD STREET
OVER UTA AND 5300 SOUTH
DRAINAGE DETAIL
PROJECT NUMBER * HPP-STP-2148(110

SALT LAKE COUNTY
C-923 DRG. NO.
SHT. 48A OF 54

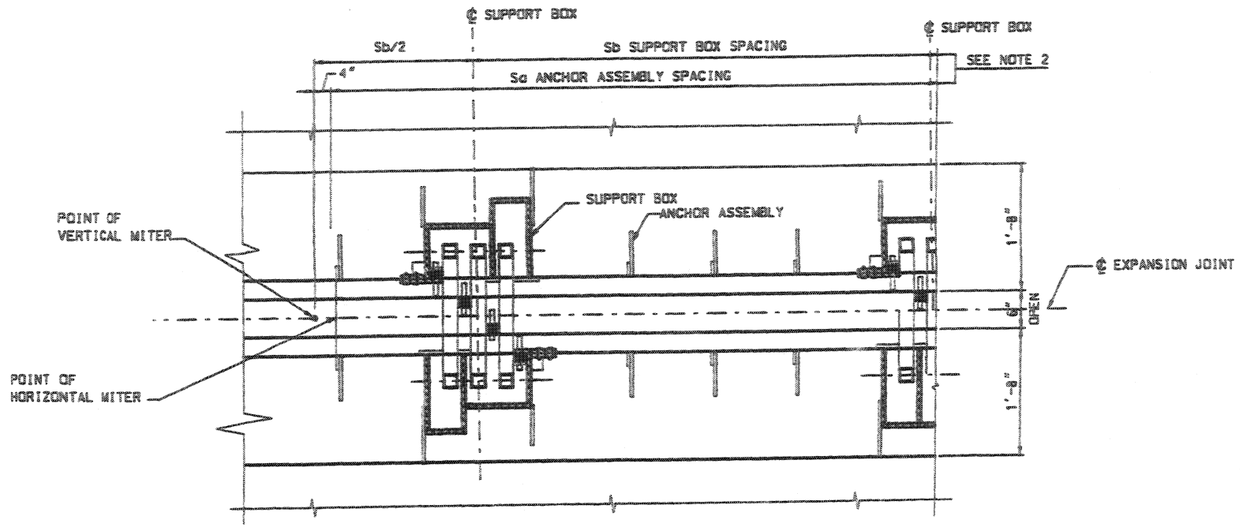

PARTIAL PLAN

EXPANSION JOINT NOTES

1. THE BASELINE TEMPERATURE FOR SETTING THE JOINT SHALL BE 68°F. JOINT DIMENSIONS "Wwb" "Wdsb" AND THE 6" CONCRETE OPENING SHALL BE ADJUSTED FOR STRUCTURE TEMPERATURES DIFFERENT THAN 68°F. REQUIRED ADJUSTMENT = (T - Tb) * Taf, WHERE "T" IS THE STRUCTURE TEMPERATURE. "Tb" IS THE BASELINE TEMPERATURE. AND "Taf" IS THE TEMPERATURE ADJUSTMENT FACTOR. Taf=.043"/"F
2. DIMENSIONS "Sa" AND "Sb" SHALL BE DESIGNED BY THE MANUFACTURER.
3. ELASTOMERIC SEALS SHALL BE CONTINUOUS WITH NO FIELD SPLICES. HOWEVER, FIELD SPLICES ARE ALLOWED FOR CENTER BEAM & EDGE ANGLE BEAM, PER MANUFACTURER'S RECOMMENDATION.
4. PLACE ELASTOMERIC SEALS BEFORE PLACING PARAPET CONCRETE.
5. ADJUST APPROACH SLAB AND SLEEPER REINFORCING STEEL IN BLOCKOUTS TO CLEAR JOINT ANCHORS AND SUPPORT BOXES. COLD FIELD BENDING IS ALLOWED.

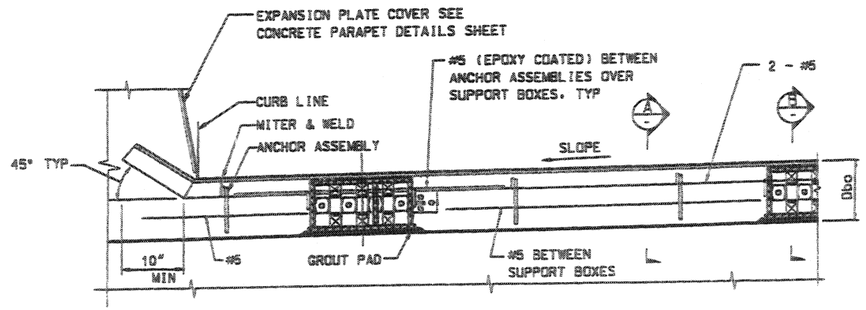

ELEVATION
LOOKING BACK AT STATION

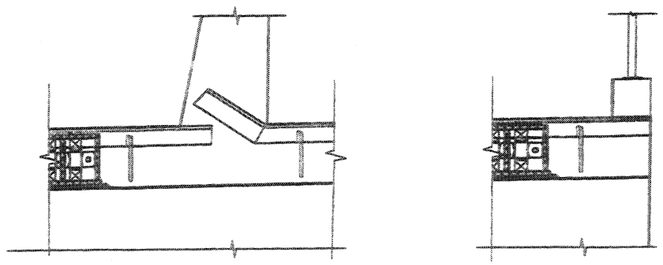

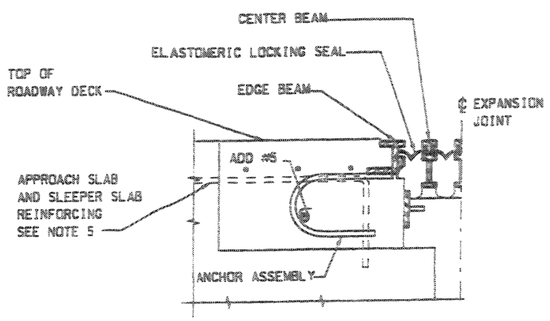

SECTION A

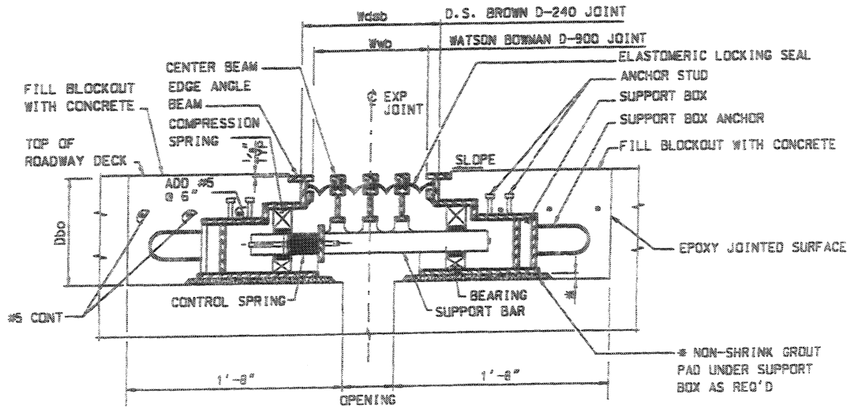

SECTION B

* ALTERNATE SUPPORT METHOD FOR SUPPORT BOX MAY BE USED PER MANUFACTURE'S RECOMMENDATION

MODULAR JOINT DESIGN TABLE

TYPE	Dbo	Wdsb	Wwb
D.S. BROWN D-240 JOINT	1'-2"	1'-0 1/4"	-
WATSON BOWMAN D-900 JOINT	11 1/2"	-	10 3/4"

TABLE OF MOVEMENT

TEMPERATURE °F	-30	17	64	92	120
OPENING (IN)	9.63	7.82	6	4.92	3.84

OPENING ADJUSTMENT = 0.039" / °F

RELEASE FOR CONSTRUCTION

NO.	DATE	REMARKS

MURRAY CITY CORPORATION
DEPARTMENT OF PUBLIC SERVICES — ENGINEERING DIVISION
4646 SO 500 W, MURRAY UT, 84123 - (801) 270-2400

DESIGN KTF 5/03 | DRAWN TAB 5/03 | CHECK DCO 9/03 | QUANT. KTF 5/03 | CHECK DCO 9/03 | CHECK DCO 9/03

APPROVAL RECOMM: _____ DATE _____ SENIOR DESIGN ENGR.
APPROVED: _____ DATE _____ DEPT ENGR DESIGN.

COTTONWOOD STREET
OVER UTA AND 5300 SOUTH
EXPANSION JOINT

PROJECT NUMBER * HPP-STP-2148(110)

SALT LAKE
COUNTY

C-923
ORG. NO.

SHT. 49 OF 54

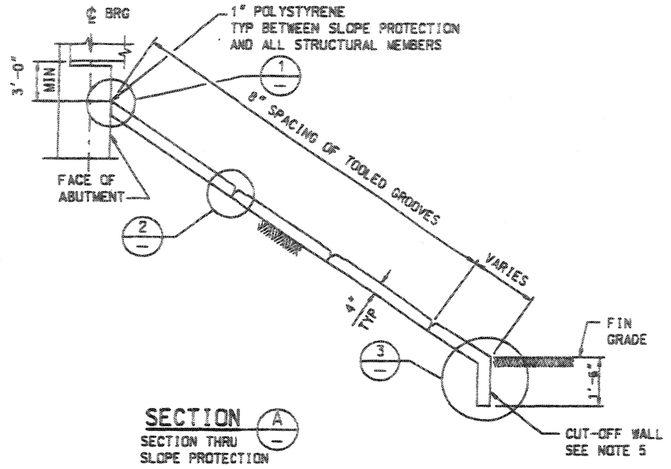

SECTION (A)
SECTION THRU
SLOPE PROTECTION

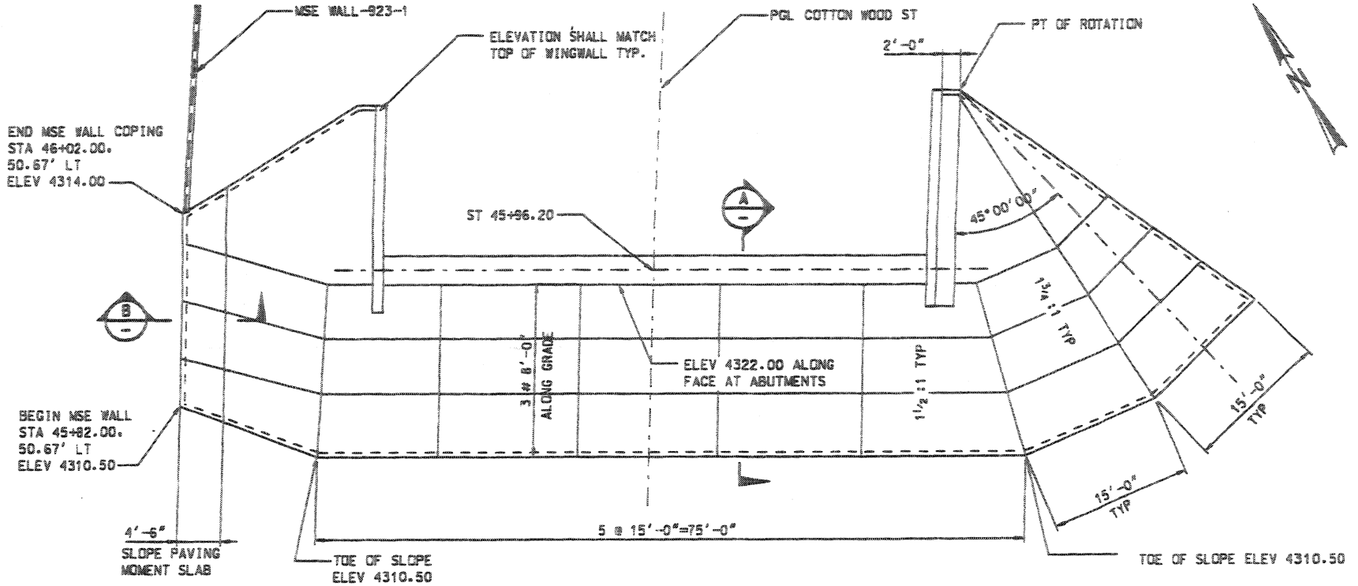

PLAN - SLOPE PROTECTION AT ABUTMENT 6

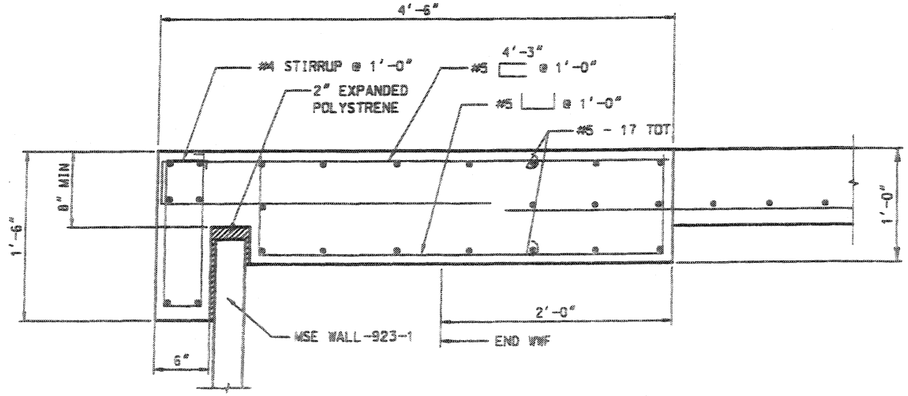

SECTION (B)
SLOPE PAVING
MOMENT SLAB

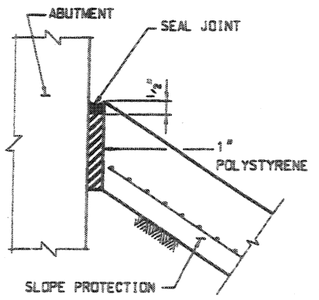

DETAIL (1)

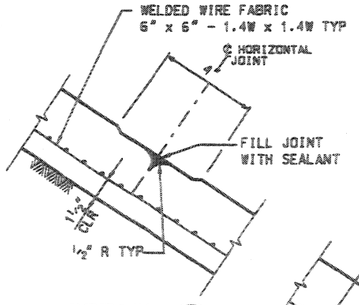

DETAIL (2)

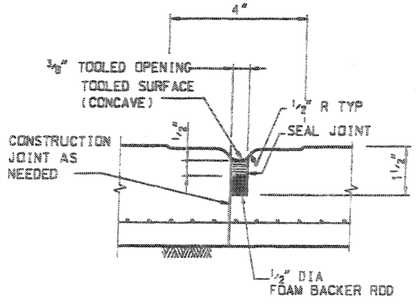

VERTICAL JOINT DETAIL

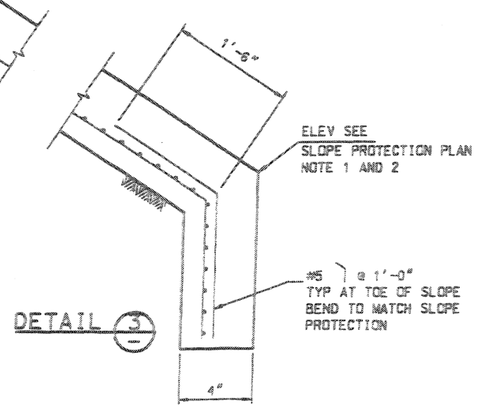

DETAIL (3)

SLOPE PROTECTION NOTES

1. ELEVATIONS AT TOE OF SLOPE ARE APPROXIMATE ONLY AND SHALL BE VERIFIED AT THE TIME OF CONSTRUCTION BY THE ENGINEER.
2. LOCATION OF THE TOE OF SLOPE IS APPROXIMATE ONLY AND SHALL BE MODIFIED TO MEET FIELD CONDITIONS.
3. PRIOR TO FINAL INSPECTION SEAL JOINTS BETWEEN THE CONCRETE SLOPE PROTECTION AND ALL STRUCTURAL MEMBERS.
4. USE CLASS A (AE) CONCRETE (f'c = 3 KSI) FOR ALL SLOPE PROTECTION.
5. CUT OFF WALL (1'-6"x 4" THICK) IS CONTINUOUS AROUND PERIMETER OF SLOPE PROTECTION EXCEPT WHERE ADJACENT TO STRUCTURAL ELEMENTS.
6. ALL STRUCTURAL STEEL SHALL BE GALVANIZED AFTER FABRICATION.
7. SEAL JOINTS IN SLOPE PROTECTION.

RELEASE FOR CONSTRUCTION

NO.	DATE	REMARKS

MURRAY CITY CORPORATION
DEPARTMENT OF PUBLIC SERVICES — ENGINEERING DIVISION
4646 SO 500 W. MURRAY UT, 84123 - (801) 270-2400

DESIGN KTF 5/03 CHECK DCO 9/03
DRAWN TAB 5/03 CHECK DCO 9/03
QUANT. KTF 5/03 CHECK DCO 9/03

APPROVAL RECOMMEND. — DATE — SENIOR DESIGN ENGR.
APPROVED — DATE — UDOT BRIDGE ENGR.

COTTONWOOD STREET
OVER UTA AND 5300 SOUTH
CONCRETE SLOPE PROTECTION
PROJECT NUMBER * HPP-STP-2148(110)

SALT LAKE COUNTY
C-923
DRG. NO.
SHT. 50 OF 54

REINFORCING STEEL SCHEDULE

FOOTINGS

BENT 1

MARK	SIZE NO.	NO. BARS	LENGTH	TOTAL LENGTH	SKETCH
F11	10	80	15'-8"	1253'-4"	
F12	9	144	15'-8"	2256'-0"	
F13	6	248	5'-5"	1343'-4"	3'-9", 8", 1'-0"

BENT 2 & 4

MARK	SIZE NO.	NO. BARS	LENGTH	TOTAL LENGTH	SKETCH
F21	10	148	35'-8"	5278'-8"	
F22	9	124	35'-8"	4422'-8"	
F23	9	216	23'-8"	5112'-0"	
F24	10	192	23'-8"	4544'-0"	
F25	6	1506	6'-11"	10402'-8"	5'-1 1/2", 8", 1'-0"

BENT 3

MARK	SIZE NO.	NO. BARS	LENGTH	TOTAL LENGTH	SKETCH
F31	10	92	22'-8"	2085'-4"	
F32	11	76	22'-8"	1722'-8"	
F33	8	140	14'-8"	2053'-4"	
F34	9	116	14'-8"	1701'-4"	
F35	6	468	6'-11"	3237'-0"	5'-3", 8", 1'-0"

BENT 5

MARK	SIZE NO.	NO. BARS	LENGTH	TOTAL LENGTH	SKETCH
F51	9	148	28'-8"	4242'-8"	
F52	10	204	28'-8"	5848'-0"	
F53	6	504	8'-11"	4494'-0"	7'-3", 8", 1'-0"

COLUMNS

BENT 1

MARK	SIZE NO.	NO. BARS	LENGTH	TOTAL LENGTH	SKETCH
C11	11	32	VARIES	875'-4"	25'-0 1/2", 25'-8", 2'-0"
C12	5	2	VARIES	2011'-0"	3 1/2", 3'-8", 23'-9 1/2", 24'-5"
C13	10	6	11'-11"	71'-6"	10'-1", 1'-10"
C14	6	8	6'-6"	52'-0"	
C15	6	40	6'-10"	273'-4"	11", 10", 1'-8"
C16	6	40	2'-7 1/2"	105'-0"	11 1/2", 8", 1'-0"

3'-6" MIN. LAP SPLICE

BENT 2

MARK	SIZE NO.	NO. BARS	LENGTH	TOTAL LENGTH	SKETCH
C17	6	16	3'-8"	58'-8"	3'-0", 8"
C21	11	96	VARIES	3684'-0"	36'-1 1/2", 36'-7 1/2", 2'-0"
C22	6	2	2278'-8"	4794'-0"	3 1/4", 5'-8", 36'-4 1/2", 34'-10 1/2"
C23	11	16	14'-10"	237'-4"	12'-10", 2'-0"
C24	9	12	9'-6"	114'-0"	
C25	6	56	10'-0"	560'-0"	11", 1'-2", 2'-7"
C26	6	112	3'-3 1/2"	368'-8"	1'-6 1/2", 8", 1'-0"
C27	6	24	4'-8"	112'-0"	4'-0", 8"

3'-6" MIN. LAP SPLICE

BENT 3

MARK	SIZE NO.	NO. BARS	LENGTH	TOTAL LENGTH	SKETCH
C31	11	96	VARIES	4112'-0"	39'-9", 41'-11", 2'-0"
C32	6	2	VARIES	5391'-0"	3 1/4", 5'-8", 38'-0", 40'-2"
C33	6	6	VARIES	40'-6"	8", 5'-2" MIN, 5'-8" MAX
C34	6	24	4'-8"	112'-0"	4'-0", 8"

3'-6" MIN. LAP SPLICE

COLUMNS

BENT 4

MARK	SIZE NO.	NO. BARS	LENGTH	TOTAL LENGTH	SKETCH
C21	11	46	VARIES	3472'-0"	35'-11", 36'-5", 2'-0"
C22	6	2	VARIES	4733'-0"	3 1/4", 5'-8", 34'-2", 34'-8"
C23	11	12	14'-10"	178'-0"	12'-10", 2'-0"
C24	9	12	9'-6"	114'-0"	
C25	6	56	9'-4"	522'-8"	11", 1'-2", 2'-11"
C26	6	112	2'-11 1/2"	331'-4"	1'-3 1/2", 8", 1'-0"
C27	6	24	4'-8"	112'-0"	4'-0", 8"

BENT 5

MARK	SIZE NO.	NO. BARS	LENGTH	TOTAL LENGTH	SKETCH
C51	11	80	64'-10"	5186'-8"	62'-10", 2'-0"
C52	7	1	5763'-4"	5763'-4"	3 1/4", 7'-8", 57'-1"
C53	6	40	7'-2"	286'-8"	6'-6", 8"
A61	9	9	60'-8"	546'-0"	
A62	6	9	60'-8"	546'-0"	
A63	6	61	7'-8"	467'-8"	
A64	6	61	7'-8"	467'-8"	
A65	6	114	VARIES	1182'-9"	9'-10" MIN, 10'-11" MAX, 1'-0"

RELEASE FOR CONSTRUCTION

NO.	DATE	REMARKS

MURRAY CITY CORPORATION
DEPARTMENT OF PUBLIC SERVICES — ENGINEERING DIVISION
4646 SO 500 W, MURRAY UT, 84123 - (801) 270-2400

DESIGN TAB 5/03 CHECK DCO 9/03
DRAWN TAB 5/03 CHECK DCO 9/03
QUANT. TAB 5/03 CHECK DCO 9/03

APPROVAL RECOMM. — SENIOR DESIGN ENGR. — DATE
APPROVED — UDOT BRIDGE ENGR. — DATE

COTTONWOOD STREET
OVER UTA AND 5300 SOUTH
REINFORCING SCHEDULE 1

PROJECT NUMBER * HPP-STP-2148(110

SALT LAKE COUNTY

C-923
ORG. NO.

SHT. 51 OF 54

REINFORCING STEEL SCHEDULE

FOOTING AND STEM WALL — ABUTMENT 6

MARK	SIZE NO.	NO. BARS	LENGTH	TOTAL LENGTH	SKETCH
A66	9	8	58'-8"	469'-4"	
A67	5	14	58'-8"	821'-4"	
A68	5	228	3'-3"	741'-0"	2'-2", 7", 6"
A69	5	57	6'-2"	351'-6"	2'-2", 2'-0", 1'-0"
A610	7	18	10'-9"	193'-6"	6'-9", 2', 2', 135°
A611	5	6	10'-2"	61'-0"	9'-2", 1'-0"

EAST WINGWALL — ABUTMENT 6

MARK	SIZE NO.	NO. BARS	LENGTH	TOTAL LENGTH	SKETCH
WE1	6	2	15'-8"	31'-4"	
WE2	5	4	VARIES	30'-2"	4'-11" MIN, 10'-2" MAX
WE3	6	16	VARIES	300'-0"	17'-8" MIN, 17'-10" MAX, 1'-0"
WE4	5	32	VARIES	269'-4"	2'-8" MIN, 14'-2" MAX
WE5	6	2	20'-7"	41'-2"	
W1	8	2	22'-8"	45'-4"	
W2	5	3	VARIES	66'-8"	21'-11" MIN, 22'-6" MAX
W3	7	4	VARIES	88'-10"	21'-11" MIN, 22'-6" MAX
W4	5	11	VARIES	143'-0"	4'-1" MIN, 21'-11" MAX
W5	7	16	VARIES	208'-0"	4'-1" MIN, 21'-11" MAX
W6	5	6	3'-11"	23'-6"	

WEST WINGWALL — ABUTMENT 6

MARK	SIZE NO.	NO. BARS	LENGTH	TOTAL LENGTH	SKETCH
WW1	6	2	16'-10"	33'-8"	
WW2	5	4	VARIES	32'-8"	5'-4" MIN, 11'-0" MAX
WW3	6	16	VARIES	318'-8"	18'-10" MIN, 19'-0" MAX, 1'-0"
WW4	5	32	VARIES	269'-4"	2'-8" MIN, 14'-2" MAX
WW5	6	2	22'-8"	45'-4"	
W1	8	2	22'-8"	45'-4"	
W2	5	3	VARIES	66'-9"	22'-0" MIN, 22'-6" MAX
W3	7	4	VARIES	89'-0"	22'-0" MIN, 22'-6" MAX
W4	5	11	VARIES	144'-5"	4'-3" MIN, 22'-0" MAX
W5	7	16	VARIES	210'-0"	4'-3" MIN, 22'-0" MAX
W6	5	6	3'-11"	23'-6"	

BENT CAP — BENT 1

MARK	SIZE NO.	NO. BARS	LENGTH	TOTAL LENGTH	SKETCH
B10	5	8	8'-2"	65'-4"	4'-2", 2'-0"
B11	9	11	55'-8	612'-4	53'-8", 1'-0"
B12	9	8	53'-8"	429'-4"	
B13	11	6	39'-6"	237'-0"	
B14	11	11	53'-8"	590'-4"	
B15	6	47	14'-10"	697'-2"	8", 4'-8", 4'-2"
B16	6	94	6'-4"	595'-4'	4'-8", 8", 1'-0"
B17	6	141	5'-10"	822'-6"	4'-2", 8", 1'-0"
B18	6	4	5'-10"	23'-4"	4'-2", 8", 1'-0"
B19	6	4	8'-8"	34'-8"	4'-8", 8", 3'-4"

BENT CAP — BENT 2

MARK	SIZE NO.	NO. BARS	LENGTH	TOTAL LENGTH	SKETCH
B20	5	6	10'-2"	61'-0"	6'-2", 2'-0", 2'-0"
B21	11	15	55'-8"	835'-0"	53'-8", 1'-0", 1'-0"
B22	11	24	53'-8"	1288'-0"	
B23	8	6	53'-8"	322'-0"	

BENT CAP — BENT 2

MARK	SIZE NO.	NO. BARS	LENGTH	TOTAL LENGTH	SKETCH
B24	8	15	54'-6"	817'-6"	2'-8½", 11'-1½", 31'-7"
B25	6	22	18'-10"	414'-4"	8", 5'-8", 8", 5'-8", 6'-2"
B26	6	110	7'-4"	806'-8"	4'-8", 8", 1'-0"
B27	6	88	7'-10"	689'-4"	6'-2", 8", 1'-0"
B28	6	44	VARIES	702'-2"	* VARIES 3'-0½" TO BY 5'-5" BY 1⅜", 8", 6'-2"
B29	6	220	VARIES	1297'-1"	44 SETS OF 5 VARIES 3'-0½" TO 5'-5" TO 1⅜", 8", 1'-0"
B210	6	152	7'-10"	1190'-8"	6'-2", 8", 1'-0"
B211	6	12	10'-5"	125'-0"	5'-8", 8", 4'-1"
B212	6	12	7'-10"	94'-0"	6'-2", 8", 1'-0"
B213	8	6	VARIES	254'-6"	VARIES 38'-8" TO 46'-2" BY 3'-9"

BENT CAP — BENT 3

MARK	SIZE NO.	NO. BARS	LENGTH	TOTAL LENGTH	SKETCH
B30	5	3	3'-11"	7'-10"	
B31	5	12	65'-10"	790'-0"	64'-8", 7", 7"
B32	5	6	66'-8"	400'-0"	64'-8", 1'-0", 1'-0"

RELEASE FOR CONSTRUCTION

NO.	DATE	REMARKS

MURRAY CITY CORPORATION
DEPARTMENT OF PUBLIC SERVICES — ENGINEERING DIVISION
4646 SO 500 W. MURRAY UT. 84123 - (801) 270-2400

	DESIGN	DRAWN	QUANT.	CHECK
	TAB 5/03	TAB 5/03	TAB 5/03	DCO 9/03
	CHECK DCO 9/03	CHECK DCO 9/03	CHECK DCO 9/03	

APPROVED: _____ DATE: _____ SENIOR DESIGN ENGR.
APPROVED: _____ DATE: _____ UDOT BRIDGE ENGR.

COTTONWOOD STREET
OVER UTA AND 5300 SOUTH
REINFORCING SCHEDULE 2
PROJECT NUMBER * HPP-STP-2148(1)0

SALT LAKE COUNTY
C-923
DRG. NO.

SHT. 32 OF 54

REINFORCING STEEL SCHEDULE

BENT CAP — BENT 3

MARK	SIZE NO.	NO. BARS	LENGTH	TOTAL LENGTH	SKETCH
B33	5	12	65'-10"	790'-0"	64'-8", 7", 7"
B34	5	73	16'-6"	1216'-8"	6", 6", 4'-8", 4'-8", 6'-2"
B35	5	511	7'-2"	3662'-2"	6'-2", 6", 6"
B36	5	290	5'-8"	1643'-4"	4'-8", 6", 6"
B37	6	408	13'-7"	5542'-0"	12'-7", 1'-0"
B38	5	264	5'-8"	1496'-0"	4'-8", 6", 6"
B310	5	4	7'-2"	28'-8"	6", 6'-2", 6"

BENT CAP — BENT 4

MARK	SIZE NO.	NO. BARS	LENGTH	TOTAL LENGTH	SKETCH
B20	5	6	10'-2"	61'-0"	6'-2", 2'-0", 2'-0"
B21	11	15	55'-8"	835'-0"	53'-8", 1'-0", 1'-0"
B22	11	24	53'-8"	1288'-0"	
B23	8	6	53'-8"	322'-0"	
B24	8	15	54'-6"	817'-6"	2'-8½", 11'-1½", 31'-7"
B25	6	22	18'-10"	414'-4"	8", 5'-8", 5'-8", 8", 6'-2"

BENT CAP — BENT 4

MARK	SIZE NO.	NO. BARS	LENGTH	TOTAL LENGTH	SKETCH
B26	6	110	7'-4"	806'-8"	5'-8", 8", 1'-0"
B27	6	88	7'-10"	689'-4"	6'-2", 8", 1'-0"
B28	6	44	VARIES	702'-2"	VARIES 3'-0½" TO 5'-5" BY 1⅜", 8", 8", 6'-2"
B29	6	220	VARIES	1297'-1"	44 SETS OF 5 VARIES 3'-0½" TO 5'-5" BY 1⅜", 8", 1'-0"
B210	6	152	7'-10"	1190'-8"	6'-2", 8", 1'-0"
B211	6	12	10'-5"	125'-0"	5'-8", 8", 4'-1"
B212	6	12	7'-10"	94'-0"	6'-2", 8", 1'-0"
B213	8	6	VARIES	254'-6"	VARIES 38'-8" TO 42'-6" BY 3'-9"

BENT CAP — BENT 5

MARK	SIZE NO.	NO. BARS	LENGTH	TOTAL LENGTH	SKETCH
B50	5	8	12'-2"	97'-4"	8'-2", 2'-0", 2'-0"
B51	11	20	55'-8"	1113'-4"	53'-8", 1'-0", 1'-0"
B52	11	20	51'-6"	1030'-0"	
B53	11	16	34'-0"	544'-0"	
B54	10	8	VARIES	253'-8"	2 SETS OF 4 VARIES FROM 18'-11" TO 44'-6" BY 6'-5"
B55	10	20	54'-9"	1095'-0"	5'-3", 5'-3", 22'-7", 8'-5", 22'-7"

BENT CAP — BENT 5

MARK	SIZE NO.	NO. BARS	LENGTH	TOTAL LENGTH	SKETCH
B56	6	36	VARIES	864'-0"	2 SETS OF 18 VARIES 4'-10" TO 9'-8" BY 3⅜", 8", 8", 8'-2"
B57	6	288	VARIES	2568'-0"	16 SETS OF 18 VARIES 4'-10 TO 9'-8" BY 3⅜", 8", 1'-0"
B58	6	142	9'-10"	1396'-4"	2 SETS OF 71, 8'-2", 8", 1'-0"
B59	6	12	15'-5"	185'-0"	9'-8", 5'-1"
B510	6	18	9'-10"	177'-0"	2 SETS OF 9, 8'-2", 8", 1'-0"

DIAPHRAGM — BENT 1

MARK	SIZE NO.	NO. BARS	LENGTH	TOTAL LENGTH	SKETCH
B511	10	8	53'-8"	429'-4"	
E11	6	10	53'-8"	536'-8"	
E12	9	14	53'-8"	751'-4"	
E13	5	54	8'-11"	481'-6"	7'-5½", 5½", 1'-0"
E14	5	54	7'-9"	418'-6"	3'-3", 3'-3", 1'-3"
E15	5	54	15'-4"	828'-0"	7'-4", 8", 3'-6", 3'-4", 6"
E16	5	54	4'-9½"	258'-9"	1'-0", 5½", 3'-4"
E17	5	54	3'-11	211'-6"	1'-0", 1'-0", 1'-11"
E18	5	162	4'-3½"	695'-3"	3'-4", 5½", 6"

RELEASE FOR CONSTRUCTION

NO.	DATE	REMARKS

MURRAY CITY CORPORATION
DEPARTMENT OF PUBLIC SERVICES — ENGINEERING DIVISION
4646 SO 500 W. MURRAY UT, 84123 - (801) 270-2400

DESIGN TAB 5/03	CHECK DCO 9/03
DRAWN TAB 5/03	CHECK DCO 9/03
QUANT. TAB 5/03	CHECK DCO 9/03

APPROVAL RECOMMENDED — SENIOR DESIGN ENGR. — DATE
APPROVED — UDOT BRIDGE ENGR. — DATE

COTTONWOOD STREET
OVER UTA AND 5300 SOUTH
REINFORCING SCHEDULE 3
PROJECT NUMBER * HPP-STP-2148(110)

SALT LAKE COUNTY
C-923
DRG. NO.

SHT. 53 OF 54

REINFORCING STEEL SCHEDULE

DIAPHRAGM — ABUTMENT 6 — BENT 3

MARK	SIZE NO.	NO. BARS	LENGTH	TOTAL LENGTH	SKETCH
D31	4	6	61'-8"	370'-0"	60'-8", 6"
D32	4	14	63'-0"	882'-0"	2'-4", 60'-8", FIELD BEND, 6"
D33	4	244	4'-6½"	1108'-2"	3'-8", 6", 4½"
D34	4	3	11'-11"	35'-9"	
E61	6	4	56'-4"	225'-4"	
E62	9	14	56'-4"	788'-8"	
E63	5	57	5'-0"	285'-0"	4'-0", 1'-0"
E64	5	57	6'-6"	370'-6"	3'-3", 3'-3"
E65	5	57	14'-4"	817'-0"	7'-4", 8", 3'-6", 2'-4", 6"
E66	5	57	3'-9½"	216'-1½"	1'-0", 5½", 2'-4"
E67	5	57	3'-11"	223'-3"	1'-0", 1'-0", 1'-11"
E68	5	171	3'-3½"	562'-10½"	2'-4", 5½", 6"

DECK

MARK	SIZE NO.	NO. BARS	LENGTH	TOTAL LENGTH	SKETCH
S1	5	2822	5'-0"	14110'-0"	10", 3", 7½", 1'-11"
S2	4	1411	3'-7"	5056'-1"	2'-3", 8", 8"
S3	5	148	VARIES	155400'-0"	1035'-11" MIN., 1066'-7" MAX., 2'-6" MIN. LAP SPLICE
S4	6	4096	58'-8"	240298'-8"	
S5	6	172	31'-6"	11835'-0"	

DECK

MARK	SIZE NO.	NO. BARS	LENGTH	TOTAL LENGTH	SKETCH
S6	6	172	125'-6"	11295'-0"	
S7	8	116	10'-0"	1160'-0"	
S8	4	1024	3'-3"	3328'-0"	4", 9½", 8"
S9	5	132	8'-4"	1100'-0"	2'-0", 2'-0", 135°, 1'-10", 1'-10", 8"
S10	5	24	11'-0"	264'-0"	
AS110	5	24	64'-1"	1538'-0"	58'-6", 1'-6½", 2'-6" LAP SPLICE WITH 2'-0" STAGGER
AS111	5	24	56'-2½"	1349'-0"	
AS112	5	57	23'-0"	1311'-0"	
AS113	9	113	23'-0"	2599'-0"	
AS114	9	16	24'-8"	394'-8"	
AS115	5	6	24'-8"	148'-0"	
AS117	5	52	3'-8"	190'-8"	

APPROACH SLAB — BENT 1

MARK	SIZE NO.	NO. BARS	LENGTH	TOTAL LENGTH	SKETCH
AS118	5	52	4'-7"	238'-0"	1'-5", 135°, 1'-7", 8", 3'-9", 10"
AS120	5	60	3'-1"	270'-0"	135°, 2'-0", 2'-5"
AS121	5	60	6'-0"	360'-0"	4'-0", 1'-6", 6"
AS122	5	3	56'-2½"	168'-7½"	

APPROACH SLAB — ABUTMENT 6

MARK	SIZE NO.	NO. BARS	LENGTH	TOTAL LENGTH	SKETCH
AS610	5	24	64'-1"	1538'-0"	58'-6", 6½", 1"
AS611	5	24	56'-6"	1356-0"	
AS612	5	60	24'-8"	1480'-0"	
AS613	9	113	24'-8"	2787'-4"	
AS614	5	4	7'-8"	30'-8"	
AS615	5	10	24'-8"	246'-8"	
AS617	5	36	4'-1"	147'-0"	

APPROACH SLAB — ABUTMENT 6

MARK	SIZE NO.	NO. BARS	LENGTH	TOTAL LENGTH	SKETCH
AS618	5	52	9'-0"	468'-0"	4'-3", 6"
AS619	5	12	3'-0"	108'-0"	1'-0", 8", 1'-4"
AS620	5	60	3'-1"	270'-0"	135°, 2'-0", 2'-5"
AS621	5	60	6'-0"	360'-0"	4'-0", 1'-6", 6"
AS622	5	3	58'-8"	176'-0"	

SLEEPER — BENT 1

MARK	SIZE NO.	NO. BARS	LENGTH	TOTAL LENGTH	SKETCH
AS11	4	116	7'-0"	812'-0"	5'-8", 8", 8"
AS12	4	116	3'-11½"	459'-2"	2'-7½", 8", 8"
AS13	6	10	56'-2½"	562'-1"	
AS14	6	4	4'-3"	17'-0"	3'-3", 1'-0"

SLEEPER — ABUTMENT 6

MARK	SIZE NO.	NO. BARS	LENGTH	TOTAL LENGTH	SKETCH
AS15	4	4	4'-7"	18'-4"	1'-4", 1'-7½", 1'-7½"
AS61	4	120	7'-0"	840'-0"	5'-8", 8", 8"
AS62	4	120	3'-11½"	475'-0"	2'-7½", 8", 8"
AS63	6	10	58'-8"	586'-8"	

NOTES:

1.) ALL DIMENSIONS ARE IN FEET AND INCHES UNLESS OTHERWISE SPECIFIED.

2.) REINFORCING STEEL DIMENSIONS ARE OUT-TO-OUT OF BAR UNLESS OTHERWISE NOTED.

3.) ALL BARS ARE COATED UNLESS OTHERWISE NOTED.

4.) SPLICES MAY BE OMITTED AT FABRICATOR'S OPTION. HOWEVER, IN SUCH CASE, FABRICATOR ASSUMES RESPONSIBILITY FOR FIT.

SUBTOTAL OF REINFORCING:

#4 BARS:	13,621 FT.	@ 0.668 lbs./ft.	=	9,099 lbs.
#5 BARS:	205,090 FT.	@ 1.043 lbs./ft.	=	213,909 lbs.
#6 BARS:	379,517 FT.	@ 1.502 lbs./ft.	=	570,035 lbs.
#7 BARS:	6,553 FT.	@ 2.044 lbs./ft.	=	13,394 lbs.
#8 BARS:	6,092 FT.	@ 2.670 lbs./ft.	=	16,266 lbs.
#9 BARS:	24,553 FT.	@ 3.400 lbs./ft.	=	83,480 lbs.
#10 BARS:	20,859 FT.	@ 4.303 lbs./ft.	=	89,756 lbs.
#11 BARS:	23,529 FT.	@ 5.313 lbs./ft.	=	125,010 lbs.
		TOTAL	=	1,121,060 lbs.

RELEASE FOR CONSTRUCTION

NO.	DATE	REMARKS

MURRAY CITY CORPORATION
DEPARTMENT OF PUBLIC SERVICES — ENGINEERING DIVISION
4646 SO 500 W. MURRAY UT, 84123 - (801) 270-2400

DESIGN TAB 5/03 CHECK DCD 9/03
DRAWN TAB 5/03 CHECK DCD 9/03
QUANT. TAB 5/03 CHECK DCD 9/03

APPROVAL RECOMM. — DATE — SENIOR DESIGN ENGR.
APPROVED — DATE — COST ESTIMATE ENGR.

COTTONWOOD STREET
OVER UTA AND 5300 SOUTH
REINFORCING SCHEDULE 4
PROJECT NUMBER * HPP-STP-2148(110)

SALT LAKE COUNTY
C-923
ORG. NO.

SHT. 54 OF 54

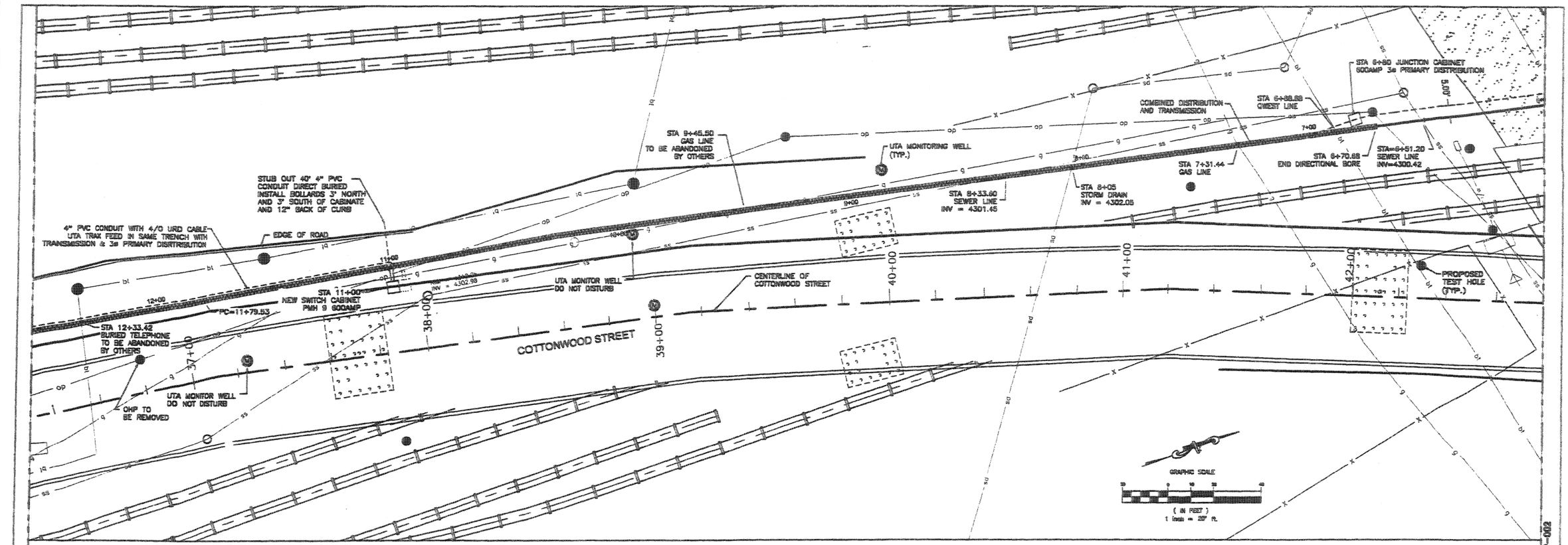

ELECTRICAL CONSULTANTS, INC.

NO	REVISION	DATE	BY	APP

MURRAY CITY CORPORATION
CITY POWER

ENGINEERING RECORD		DATE
DRAWN	FSA/OC	07/16/03
DESIGNED	DLM	
CHECKED	DLM	07/16/03
APPROVED		
DWG SCALE: 1"=20'	PLOT SCALE: 1=1	

COTTONWOOD STREET BRIDGE

138kV & 12kV POWER LINE RELOCATION

PLAN & PROFILE – UNDERGROUND ALIGNMENT 2

FILE NO : MCDP&P002-2 | MCP-003 OF 047 | REVISION NO : 3

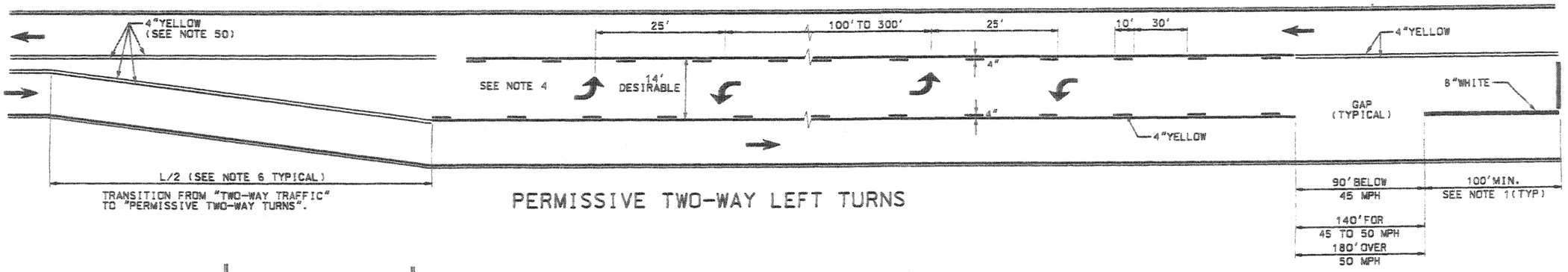

PERMISSIVE TWO-WAY LEFT TURNS

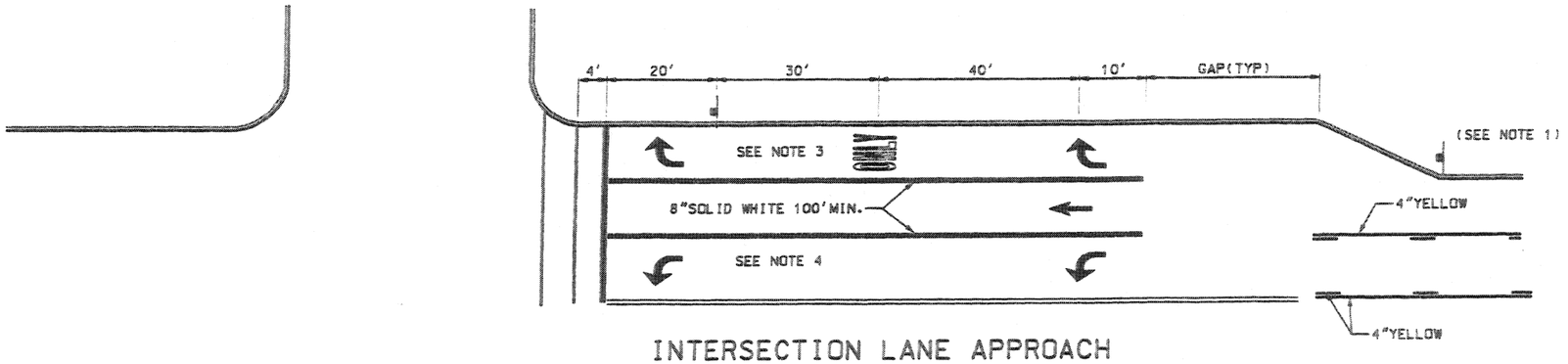

INTERSECTION LANE APPROACH

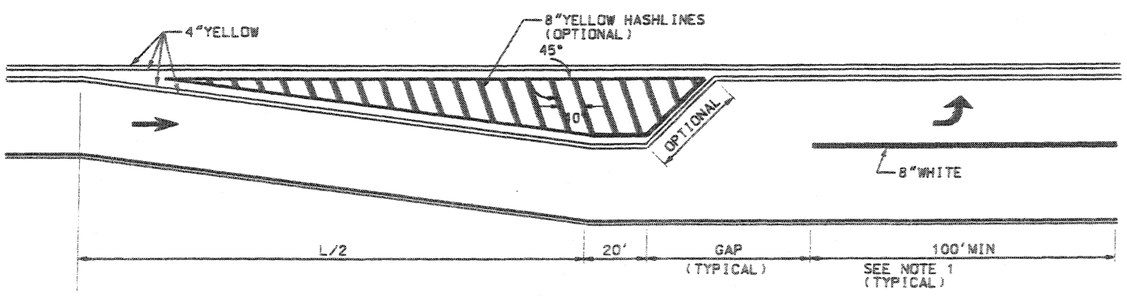

PAINTED LEFT TURN LANE

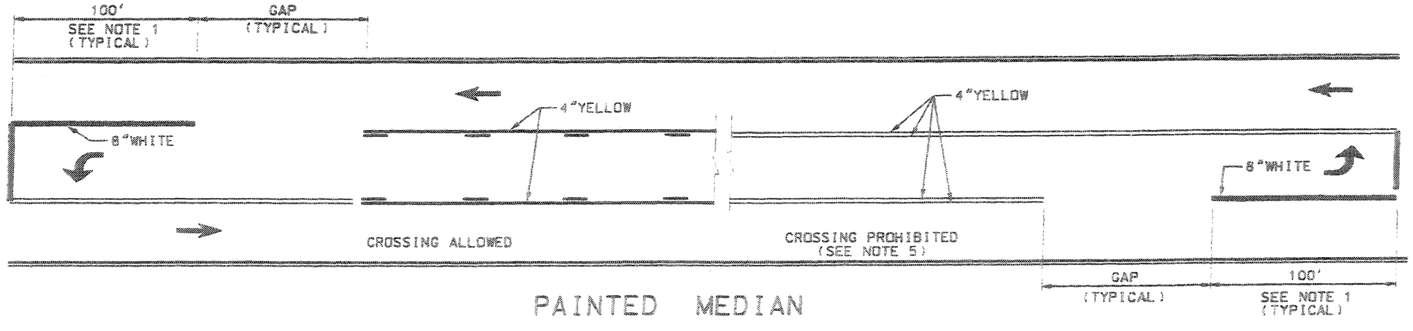

PAINTED MEDIAN

NOTES:

1. USE A CAPACITY ANALYSIS TO DETERMINE THE LENGTH OF STORAGE REQUIRED FOR TURN LANE. A MINIMUM LENGTH OF 100 FEET IS REQUIRED.
2. USE THE STANDARD ALPHABET FOR HIGHWAY SIGNS AND PAVEMENT MARKINGS FOR PAVEMENT MESSAGES.
3. USE PAVEMENT MARKINGS CONSISTING OF ARROWS, THE WORD "ONLY" IN LANE, AND THE STANDARD SIGN R3-7R WHEN THE LANE IS A MANDATORY MOVEMENT.
4. PAVEMENT MARKINGS ARE OPTIONAL FOR MANDATORY LEFT TURN LANES AND TWO-WAY LEFT TURN LANES.
5. CREATE A CROSSING PROHIBITED ISLAND OR MEDIAN BY PLACING TWO DOUBLE YELLOW LINES FOR EACH DIRECTION (4 SOLID YELLOW LINES TOTAL)
6. TAPER FORMULA: $L = SW$ FOR SPEEDS OF 45 MPH OR GRATER
   $L = WS^2/60$ FOR SPEEDS OF 40 MPH OR LESS.
7. FOR RAISED MEDIAN AND PLOWABLE END SECTION DETAILS SEE STD DWG GW 1

REVISIONS

NO.	DATE	APPR	REMARKS

UTAH DEPARTMENT OF TRANSPORTATION
STANDARD DRAWINGS FOR ROAD AND BRIDGE CONSTRUCTION
SALT LAKE CITY, UTAH

RECOMMENDED FOR APPROVAL — JULY 03,2002 DATE
CHAIRMAN STANDARDS COMMITTEE
APPROVED — JULY 03,2002 DATE
DEPUTY DIRECTOR

PAINTED MEDIAN & AUXILIARY LANE DETAILS

STANDARD DRAWING TITLE

STD DWG
ST 5

TYPE I

TYPE II

BARRICADES
NOTES 1, 2

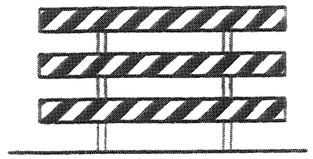

TYPE III
NOTE 2

ADVANCE WARNING ARROW PANELS
SEE NOTE 3

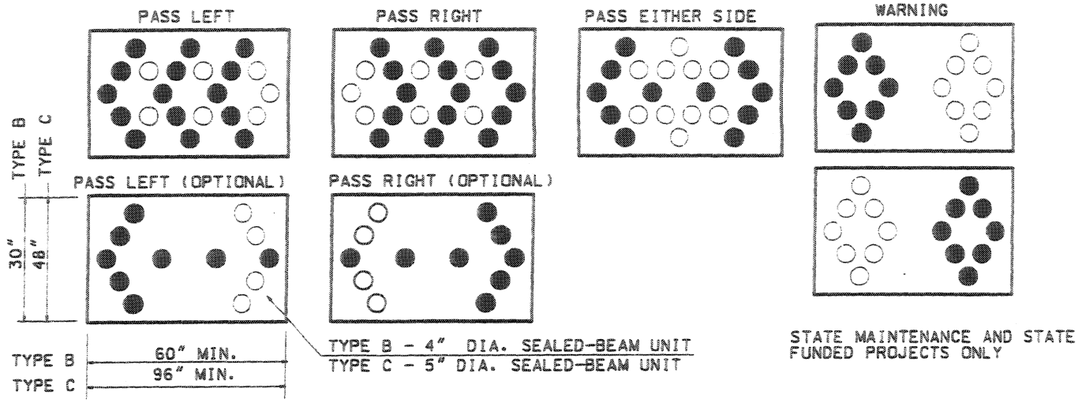

STATE MAINTENANCE AND STATE FUNDED PROJECTS ONLY

FEDERAL FUNDED PROJECTS ONLY.

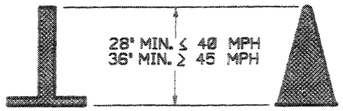

TUBULAR MARKERS
DAYLIGHT HOURS ONLY

CONES
DAYLIGHT HOURS ONLY

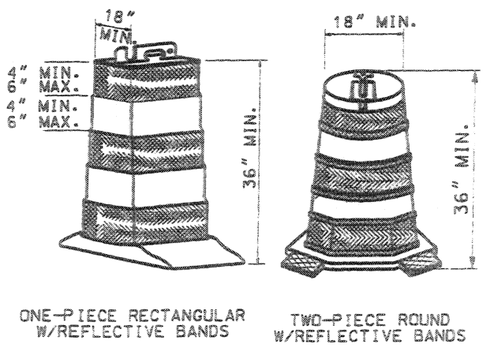

ONE-PIECE RECTANGULAR W/REFLECTIVE BANDS

TWO-PIECE ROUND W/REFLECTIVE BANDS

PLASTIC DRUMS
SEE NOTE 4

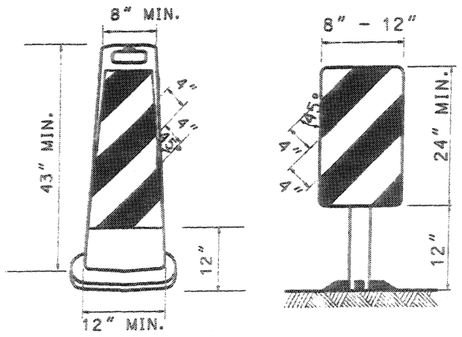

VERTICAL PANELS
SEE NOTE 1

NOTES:

1. A MINIMUM OF 270 SQUARE INCHES OF RETROREFLECTIVE MATERIAL PLACED A MINIMUM OF 12 INCHES ABOVE THE ROADWAY SURFACE IS REQUIRED ON BARRICADES AND VERTICAL PANELS WHEN USED ON THE INTERSTATE OR ROADWAYS WITH A POSTED SPEED OF GREATER THAN 45 MPH. PLACE BARRICADES AND VERTICAL PANELS IN SUCH A MANNER THAT THEY ARE VISIBLE TO APPROACHING TRAFFIC.
2. USE SANDBAGS WITH SAND OR OTHER COMPARABLE SOFT MATERIAL AS BALLAST. DO NOT PLACE BALLAST HIGHER THAN 12 INCHES ABOVE THE ROADWAY AND DO NOT COVER ANY REFLECTIVE AREA OF RAILS OR SIGNS.
3. PLACE THE BOTTOM EDGE OF THE ADVANCE WARNING ARROW PANELS A MINIMUM OF 7 FEET ABOVE THE ROADWAY SURFACE.
4. USE PLASTIC DRUMS AS LANE CLOSURE TAPER DEVICES FOR SPEEDS 50 MPH AND GREATER.

REVISIONS

NO.	DATE	APPR.	REMARKS

UTAH DEPARTMENT OF TRANSPORTATION
STANDARD DRAWINGS FOR ROAD AND BRIDGE CONSTRUCTION
SALT LAKE CITY, UTAH

RECOMMENDED FOR APPROVAL — JULY 03,2002 DATE
CHAIRMAN STANDARDS COMMITTEE
APPROVED — JULY 03,2002 DATE
DEPUTY DIRECTOR

CONSTRUCTION ZONE CHANNELIZATION DEVICES

STANDARD DRAWING TITLE

STD DWG
TC 1A

NOTES 1, 5

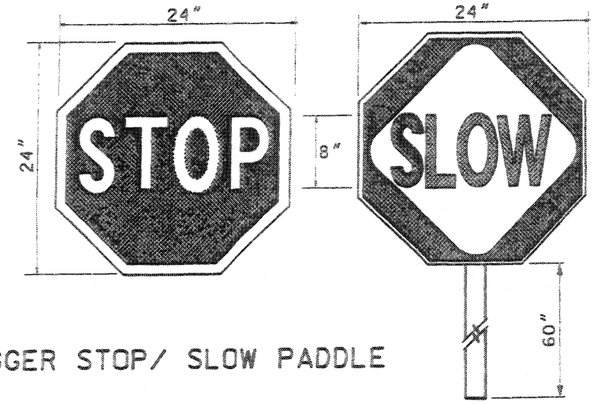

FLAGGER STOP/ SLOW PADDLE

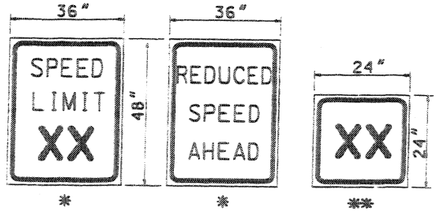

REDUCED SPEED SIGNING

* REGULATORY - BLACK/WHITE
** ADVISORY - BLACK/ORANGE
XX SPEED

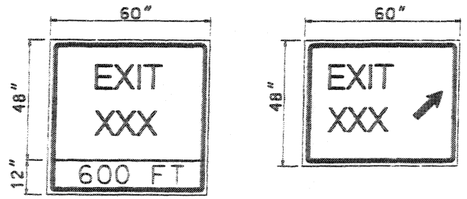

EXIT RAMP SIGNING

BLACK/ORANGE
XXX EXIT NUMBER

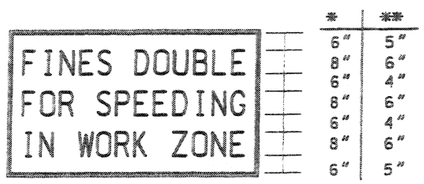

*	**
6"	5"
8"	6"
6"	4"
8"	6"
6"	4"
8"	6"
6"	5"

FINES DOUBLE SIGN
– LONG TERM APPLICATION

* 84" X 48" FREEWAY
** 60" X 36" CONVENTIONAL HIGHWAYS
USE SERIES "C" STANDARD HIGHWAYS ALPHABET
BLACK/ORANGE

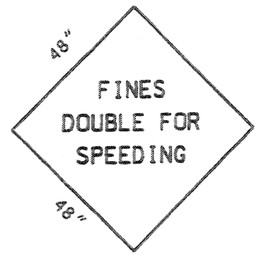

FINES DOUBLE SIGN
– SHORT TERM APPLICATION

USE 7" SERIES "C" STANDARD HIGHWAY ALPHABET
USE ON RAMPS AND SIDE STREET APPROACHES
BLACK/ORANGE

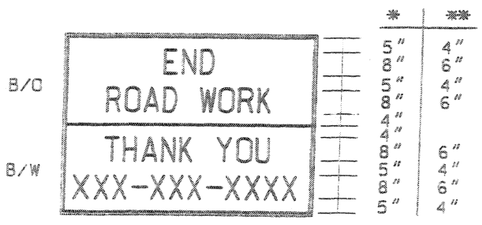

*	**
5"	4"
8"	6"
5"	4"
8"	6"
4"	
4"	
8"	6"
5"	4"
8"	6"
5"	4"

CONSTRUCTION ZONE
INFORMATION SIGN

* 84" X 60" FREEWAY
** 60" X 48" CONVENTIONAL HIGHWAYS
USE SERIES "C" STANDARD HIGHWAYS ALPHABET
XXX CONTRACTOR'S PHONE NUMBER

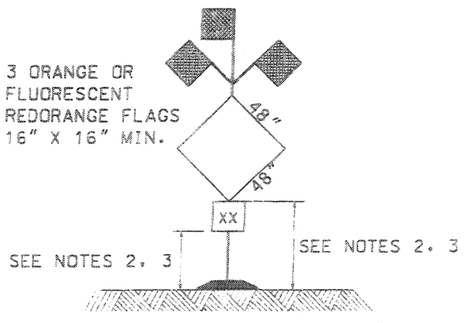

TYP. SIGN INSTALLATION
WITH FLAGS
SEE NOTES 4, 5

NOTES

1. CLOSE ROADWAYS WITH TYPE III BARRICADES. EXTEND THE BARRICADES ACROSS INTENDED ROAD CLOSURE A MINIMUM OF 3/4 OF THE ROADWAY STARTING FROM THE CENTER OF THE ROADWAY AND EXTENDING IN BOTH DIRECTIONS TOWARD THE SHOULDERS. PLACE A "ROAD CLOSED" SIGN (R11-2) OVER THE CENTER LINE AND THE APPROPRIATE "DETOUR" ARROW SIGNS (M4-10 L OR R) ON EACH SIDE OF THE "ROAD CLOSED" SIGN. DETOUR ARROWS ARE NOT REQUIRED IF DETOUR IS NOT AT ROAD CLOSURE.
2. SIGNS ON PORTABLE STANDS REQUIRE A 12 INCH MINIMUM MOUNTING HEIGHT.
3. SIGNS ON PORTABLE STANDS PLACED AMONG CHANNELIZING DEVICES REQUIRE A 36 INCH MINIMUM MOUNTING HEIGHT.
4. SIGNS USING POST TYPES P1,P2 OR P3 REQUIRE A MINIMUM 84 INCHES MOUNTING HEIGHT FROM ROADWAY SURFACE. REFER TO SN SERIES STANDARD DRAWINGS.
5. PLACE TWO ORANGE STRIPS OF REFLECTIVE SHEETING, 4 INCHES X 24 INCHES, VERTICALLY, 12 INCHES FROM THE RIGHT AND LEFT CORNERS ON THE BACK OF SIGNS USED WITH PORTABLE STANDS. USE THE SAME GRADE OF REFLECTIVE SHEETING AS USED ON THE FRONT OF THE SIGN.
6. USE SANDBAGS WITH SAND OR OTHER COMPARABLE SOFT MATERIAL AS BALLAST. DO NOT PLACE BALLAST HIGHER THAN 12 INCHES ABOVE THE ROADWAY AND DO NOT COVER ANY REFLECTIVE AREA OF RAILS OR SIGNS.
7. PLACE ADVISORY SPEED LIMIT SIGNS ONLY IN COMBINATION WITH AND BELOW A WARNING SIGN.

REVISIONS

NO.	DATE	APPR.	REMARKS

UTAH DEPARTMENT OF TRANSPORTATION
STANDARD DRAWINGS FOR ROAD AND BRIDGE CONSTRUCTION
SALT LAKE CITY, UTAH

RECOMMENDED FOR APPROVAL — JULY 03,2002 DATE
CHAIRMAN STANDARDS COMMITTEE
APPROVED — JULY 03,2002 DATE
DEPUTY DIRECTOR

STANDARD DRAWING TITLE
CONSTRUCTION ZONE SIGNING

STD DWG
TC 1B

HAZARD MITIGATION

1. USE CONSTRUCTION CLEAR ZONE DISTANCE IDENTIFIED IN TABLE 1 TO MITIGATE THE FOLLOWING HAZARDS.
   HAZARDS
   A. NON-WORKING EQUIPMENT OR VEHICLES
   B. STOCKPILED MATERIAL
   C. WORKING VEHICLES AND WORKERS (NON-FLAGGERS)
   D. OTHER OBJECTS AND FEATURES (IE: BRIDGE PARAPETS, BARRIER BLUNT ENDS, POLES)
   E. VERTICAL DROP-OFF LESS THAN 48 INCHES OR SLOPES STEEPER THAN 4:1
2. MITIGATE ALL OTHER HAZARDS OR DROP-OFFS GREATER THAN 48 INCHES WITHIN AASHTO CLEAR ZONE AS APPROVED BY THE REGION TRAFFIC ENGINEER.

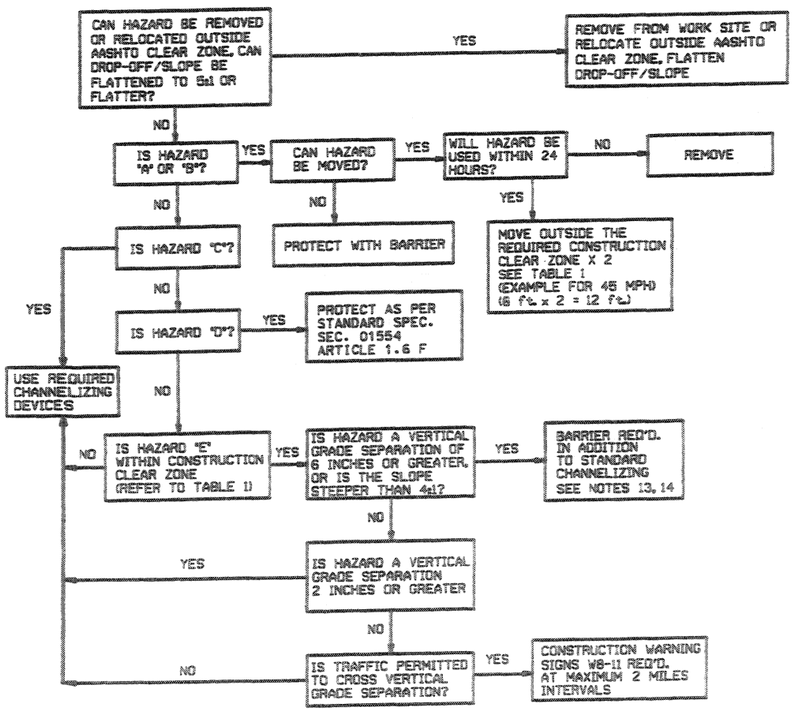

DETAIL AA

NOTES:

1. USE CURRENT EDITION OF UDOT STANDARDS AND MUTCD FOR TRAFFIC CONTROL.
2. SEE STD DWG TC 1A AND TC 1B FOR CONSTRUCTION ZONE SIGNING AND DEVICE REQUIREMENT.
3. COVER OR REMOVE NON-APPLICABLE SIGNING, BOTH EXISTING AND CONSTRUCTION SIGNS. REMOVE NON-APPLICABLE PAVEMENT MARKINGS.
4. REMOVE NON-APPLICABLE PORTABLE SIGNS OR MOVE BEYOND A DISTANCE TWICE THAT OF THE CONSTRUCTION CLEAR ZONE. (SEE TABLE 1 AND DETAIL AA).
5. REFER TO STANDARD SPECIFICATION 01554, ARTICLE 3.5A, FOR FLAGGING REQUIREMENT FOR OPERATING TRAFFIC SIGNALS.
6. USE A FULL LANE CLOSURE WHEN WORK ENCROACHES INTO A TRAFFIC LANE, UNLESS THE TRAFFIC LANE CAN BE RECREATED.
7. CLEAN AND RESTORE PAVEMENT MARKINGS AT THE END OF EACH DAY'S OPERATION, BOTH ON AND OFF THE PROJECT, THAT ARE OBSCURED BY WORK OPERATIONS.
8. LIMIT ADVISORY AND REGULATORY SPEED REDUCTION OF 10 MPH, WITH THE APPROVAL FROM THE ENGINEER. FOR REDUCTIONS EXCEEDING 10 MPH, OBTAIN APPROVAL FROM THE REGION TRAFFIC ENGINEER. USE SPEED REDUCTIONS ONLY DURING IMPACTED TIMES AND AREAS. RESTORE REGULATORY SPEED LIMIT AT LOCATIONS WHERE TRAFFIC IS NOT BEING IMPACTED BY CONSTRUCTION ACTIVITIES.
9. USE THE POSTED SPEED LIMIT PRIOR TO CONSTRUCTION TO COMPUTE THE SIGN SPACING, TAPER LENGTH, BUFFER ZONE, AND CONSTRUCTION CLEAR ZONE DISTANCE. USE THE POSTED SPEED LIMIT DURING CONSTRUCTION TO DETERMINE THE TANGENT SPACING FOR CHANNELIZING DEVICES.
10. USE PLASTIC DRUMS FOR LANE CLOSURE TAPER DEVICES FOR SPEEDS 50 MPH AND GREATER.
11. USE DOWNSTREAM TAPER FOR OPERATIONS LONGER THAN 3 DAYS.
12. PLACE ADVANCE WARNING ARROW PANEL IN THE FIRST 1/3 OF THE TAPER.
13. USE AN APPROVED CONSTRUCTION ZONE ATTENUATOR WITH TEMPORARY PRECAST CONCRETE BARRIER WHEN APPROACH ENDS ARE WITHIN AASHTO CLEAR ZONE. DO NOT USE A TRUCK MOUNTED ATTENUATOR FOR ANY PERIOD LONGER THAN 24 HOURS.
14. USE PROPER LENGTH OF NEED FOR TEMPORARY BARRIER AS PER THE REQUIREMENTS OF THE CURRENT EDITION OF THE ROADSIDE DESIGN GUIDE. USE POSTED SPEED LIMIT PRIOR TO THE CONSTRUCTION ZONE FOR THE DESIGN OF THE REQUIRED LENGTH OF NEED. USE TABLE 2 FOR THE CONSTRUCTION ZONE FLARE RATE REQUIREMENT FOR TEMPORARY BARRIER. APPROVAL FROM THE REGION TRAFFIC ENGINEER IS REQUIRED FOR MODIFICATION TO THE REQUIRED FLARE RATE.

TABLE 1
CONSTRUCTION CLEAR ZONE

MPH	feet
40 & LESS	3
45	6
50	6.5
55	7.5
60	8
65	8.5
70	9
75	10.5

TABLE 2
CONSTRUCTION ZONE FLARE RATES TEMPORARY BARRIER

MPH	FLARE
≥70	20:1
65	18:1
60	17:1
55	16:1
50	14:1
45	10:1
≤40	6:1

REVISIONS

NO.	DATE	APPR.	REMARKS

UTAH DEPARTMENT OF TRANSPORTATION
STANDARD DRAWINGS FOR ROAD AND BRIDGE CONSTRUCTION
SALT LAKE CITY, UTAH

RECOMMENDED FOR APPROVAL — JULY 03,2002 DATE — CHAIRMAN STANDARDS COMMITTEE
APPROVED — JULY 03,2002 DATE — DEPUTY DIRECTOR

STANDARD DRAWING TITLE
TRAFFIC CONTROL GENERAL

STD DWG
TC 2A

TAPER, BUFFER ZONE & SIGN SPACING CHART

	POSTED SPEED MPH(S)	MINIMUM TAPER LENGTH(L)	LENGTH OF BUFFER(BZ)	MINIMUM SIGN SPACING(SS)			ONE LANE TWO-WAY FLAGGING
		12'LANE CLOSURE	DESIRABLE	A	B	C	TAPER LENGTH
		feet	feet	feet	feet	feet	feet
NON INTER STATE	30 AND LOWER	180	100	100	100	100	50
	35	245	120	350	350	350	
	40	320	165				
	45	540	220	500	500	500	100
	50	600	280				
	55	660	335				
	60	720	415				
	65	780	485				
INTER STATE	65	780	485	1000	1500	2640	
	70	840	600				
	75	900	700				

1- TAPER FORMULAS

A) LANE TAPER LENGTH IN FEET

$L = SW \geq$ 45 MPH $L = \frac{WS^2}{60} \leq$ 40 MPH

1/3 L = FOR SHOULDER CLOSURE TAPER

1/2 L = FOR LANE SHIFT TAPER

WHERE L = TAPER LENGTH
W = WIDTH OF CLOSURE OR SHIFT
S = POSTED SPEED

2- CHANNELIZING DEVICES

A) USE A MINIMUM OF 1 DEVICE PER FOOT OF LANE CLOSURE, PLUS 1 ADDITIONAL DEVICE TO START.

B) ON TANGENT: S X 2 = SPACING UP TO 100 FEET MAXIMUM.

C) LENGTH OF BUFFER ZONE (BZ) IS THE DISTANCE FROM END OF LANE CLOSURE TAPER TO WORK AREA, OR ANY OBSTRUCTION PRIOR TO WORK AREA.

TRAFFIC CONTROL DEVICE LEGEND

- SIGN (PORTABLE OR FIXED)
- CHANNELIZING DEVICE (SEE STD DWG TC 1)
- PLASTIC DRUMS
- FLAGGING STATION
- ADVANCE WARNING ARROW PANEL
- BARRIER
- DIRECTION OF TRAFFIC
- TYPE III BARRICADE
- DIRECTION OF WORK VEHICLE

REDUCED SPEED WORK ZONE SIGNING

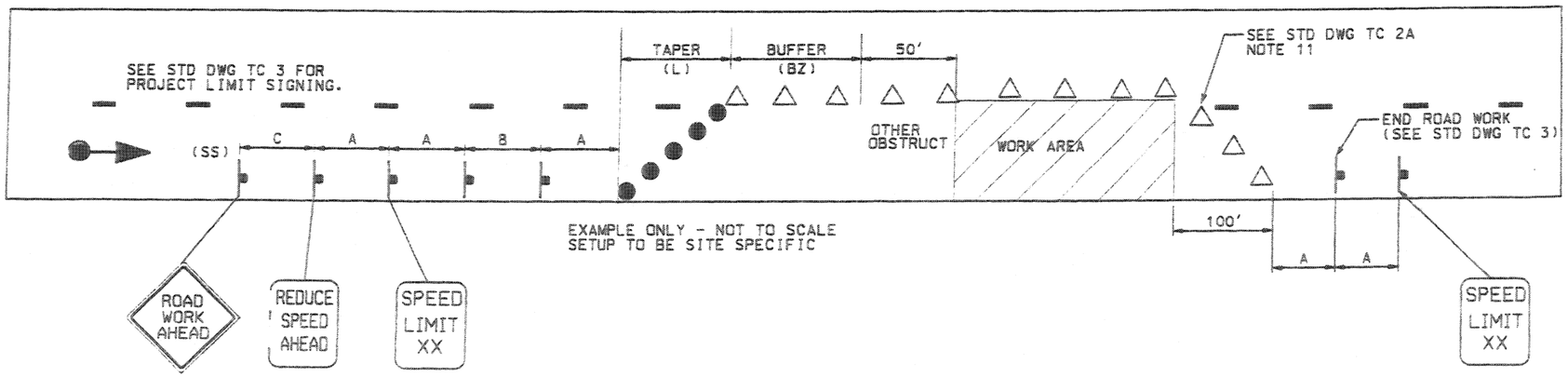

STANDARD WORK ZONE SIGNING

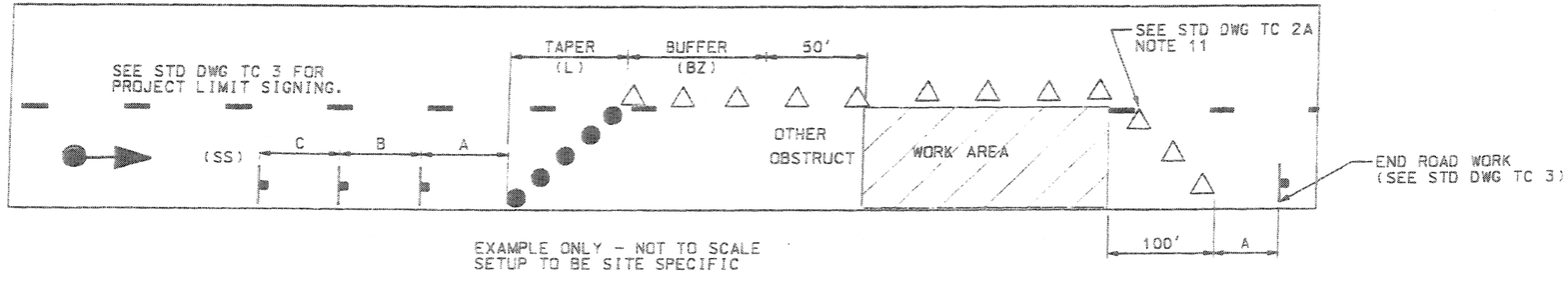

REVISIONS

NO.	DATE	APPR.	REMARKS

UTAH DEPARTMENT OF TRANSPORTATION
STANDARD DRAWINGS FOR ROAD AND BRIDGE CONSTRUCTION
SALT LAKE CITY, UTAH

RECOMMENDED FOR APPROVAL — JULY 03,2002 DATE
CHAIRMAN STANDARDS COMMITTEE APPROVED — JULY 03,2002 DATE
DEPUTY DIRECTOR

STANDARD DRAWING TITLE
TRAFFIC CONTROL GENERAL

STD DWG
TC 2B

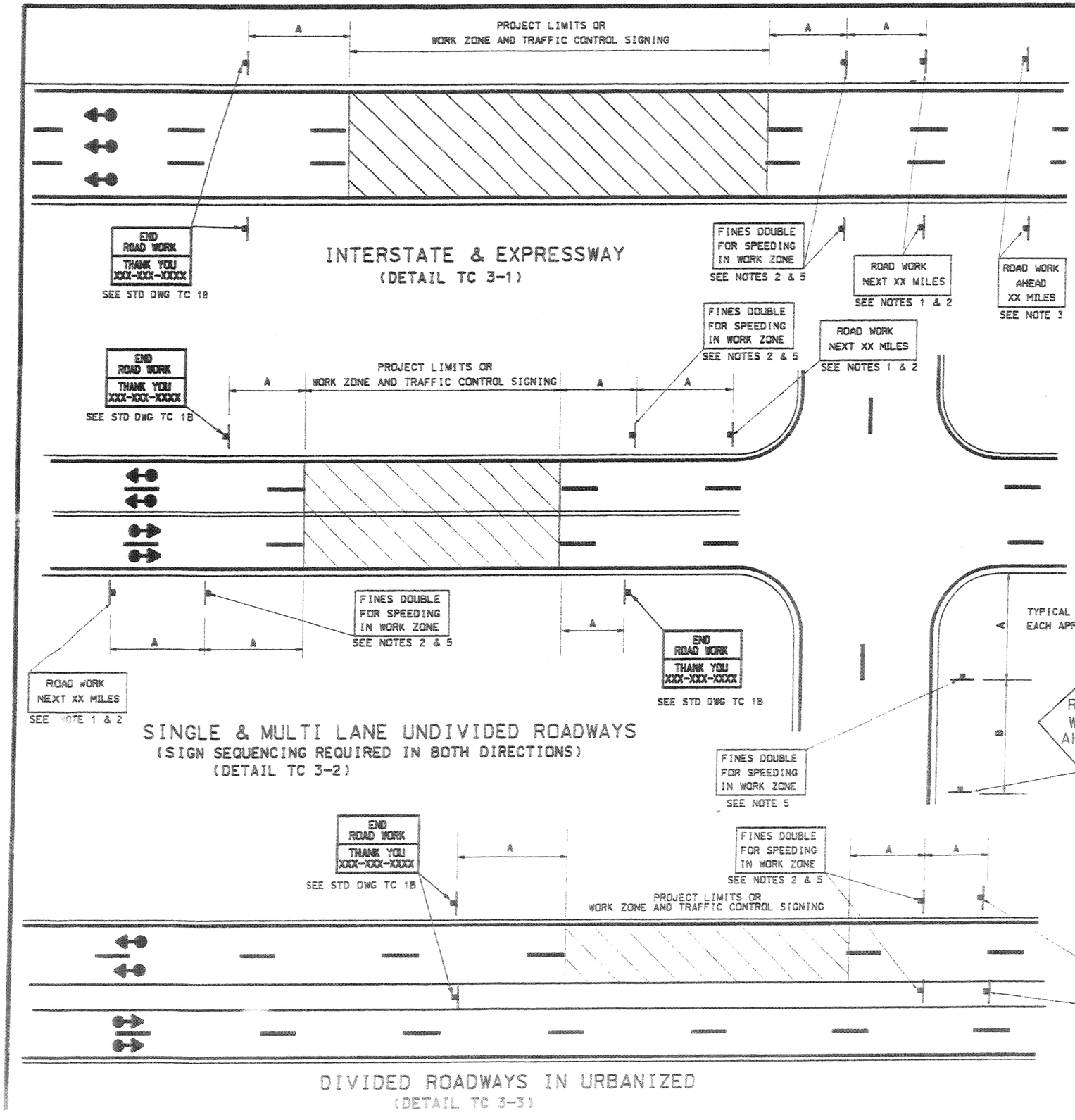

INTERSTATE & EXPRESSWAY
(DETAIL TC 3-1)

SINGLE & MULTI LANE UNDIVIDED ROADWAYS
(SIGN SEQUENCING REQUIRED IN BOTH DIRECTIONS)
(DETAIL TC 3-2)

DIVIDED ROADWAYS IN URBANIZED
(DETAIL TC 3-3)

NOTES:

1. USE "ROAD WORK NEXT __ MILES" SIGN G20-1, WHEN TRAFFIC CONTROL IS GREATER THAN 2 MILES IN LENGTH.
2. PLACE " ROAD WORK AHEAD" SIGN AHEAD OF THE "FINES DOUBLE FOR SPEEDING IN WORK ZONE" SIGN WHEN THE "ROAD WORK NEXT __ MILES" IS NOT USED.
3. PLACE "ROAD WORK AHEAD __ MILES" SIGN AT ROUTE SEPARATION POINT IF AN ALTERNATE ROUTE IS AVAILABLE AND SIGNIFICANT DELAYS ARE EXPECTED.
4. USE PROJECT LIMIT SIGNING IN BOTH DIRECTIONS IF TRAFFIC CONTROL AFFECTS TRAFFIC IN BOTH DIRECTIONS.
5. "FINES DOUBLE FOR SPEEDING IN WORK ZONE" SIGN IS OPTIONAL. SEE STD DWG TC 1B.
6. WHEN REDUCED SPEEDS AND/OR "FINES DOUBLE" OPTION IS USED, "FINES DOUBLE" SIGNING AND SPEED LIMIT SIGNING ARE REQUIRED AT ALL INTERCHANGES WITHIN THE PROJECT.
7. PLACE SIGNING ON RIGHT SHOULDER AND MEDIAN WHEN CONDITIONS PERMIT.
8. SEE STD DWG TC 2B FOR TAPER, BUFFER ZONE, AND SIGN SPACING CHART.

REVISIONS

NO.	DATE	APPR	REMARKS

UTAH DEPARTMENT OF TRANSPORTATION
STANDARD DRAWINGS FOR ROAD AND BRIDGE CONSTRUCTION
SALT LAKE CITY, UTAH

RECOMMENDED FOR APPROVAL — JULY 03,2002 DATE

CHAIRMAN STANDARDS COMMITTEE
APPROVED — JULY 03,2002 DATE

DEPUTY DIRECTOR

TRAFFIC CONTROL
PROJECT LIMIT SIGNING

STANDARD DRAWING TITLE

STD DWG
TC 3

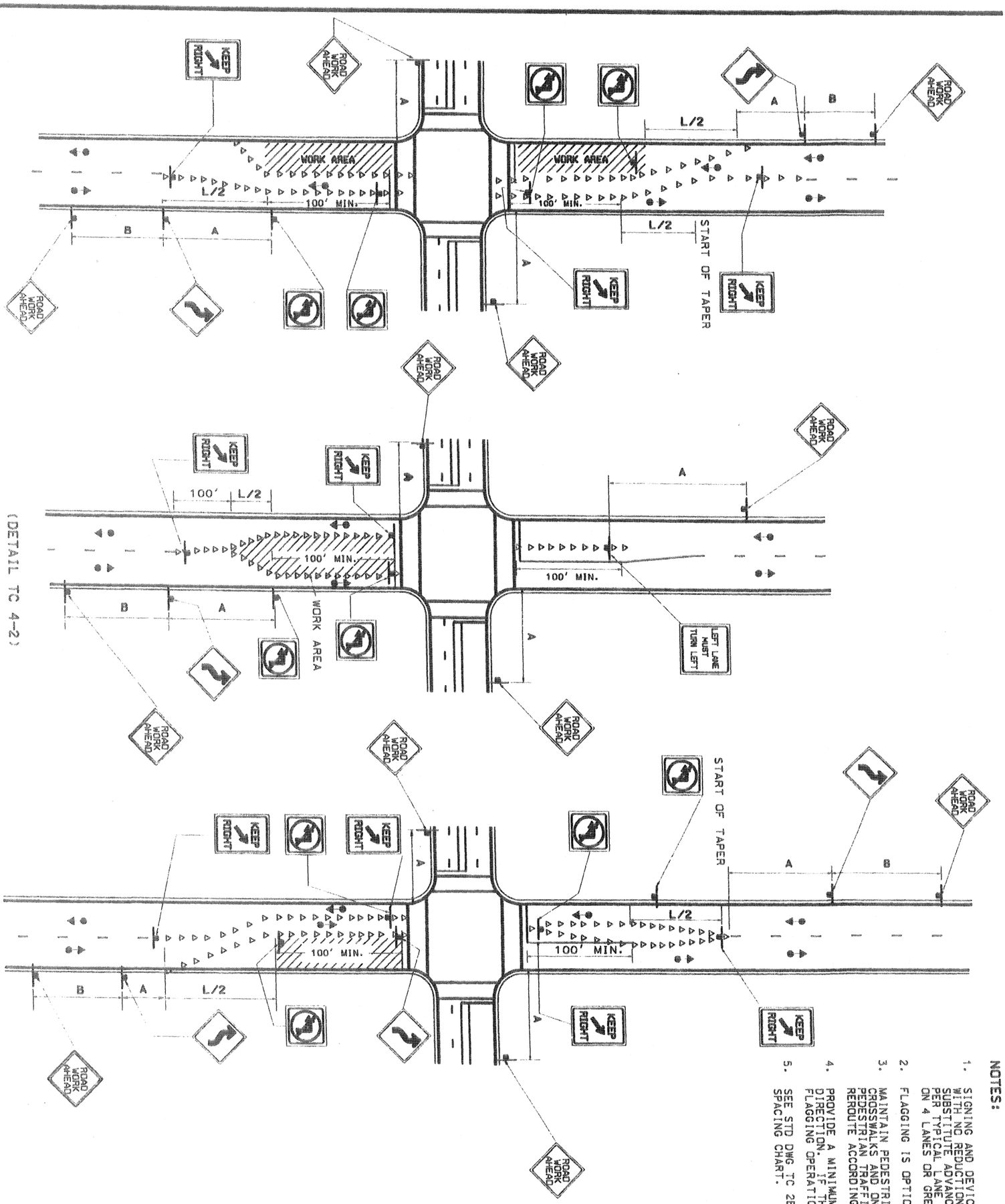

(DETAIL TC 4-1)

(DETAIL TC 4-2)

(DETAIL TC 4-3)

LANE SHIFT FOR URBAN INTERSECTIONS

NOTES:

1. SIGNING AND DEVICES SHOWN FOR 2 LANE ROADWAY WITH NO REDUCTION IN NUMBER OF LANES. SUBSTITUTE ADVANCE SIGNING AND DEVICES AS PER TYPICAL LANE CLOSURE FOR LANE REDUCTION ON 4 LANES OR GREATER SEE STD DWG TC 8 OR TC 5
2. FLAGGING IS OPTIONAL WITH LANE CLOSURE.
3. MAINTAIN PEDESTRIAN TRAFFIC AT EXISTING CROSSWALKS AND ON EXISTING SIDEWALKS. WHEN PEDESTRIAN TRAFFIC CANNOT BE MAINTAINED REROUTE ACCORDING TO STD DWG TC 6.
4. PROVIDE A MINIMUM 10' TRAFFIC LANE IN EACH DIRECTION. IF THIS CANNOT BE DONE USE A FLAGGING OPERATION AS PER STD DWG TC 14
5. SEE STD DWG TC 2B FOR TAPER, BUFFER, AND SIGN SPACING CHART.

STD DWG	STANDARD DRAWING TITLE	UTAH DEPARTMENT OF TRANSPORTATION	REVISIONS
TC 4	TRAFFIC CONTROL URBAN INTERSECTION WITH ROADWAYS UNDER 50 MPH	STANDARD DRAWINGS FOR ROAD AND BRIDGE CONSTRUCTION SALT LAKE CITY, UTAH	NO. DATE APPR REMARKS
		RECOMMENDED FOR APPROVAL — JULY 03,2002 DATE	
		CHAIRMAN STANDARDS COMMITTEE APPROVED — JULY 03,2002 DATE	
		DEPUTY DIRECTOR	

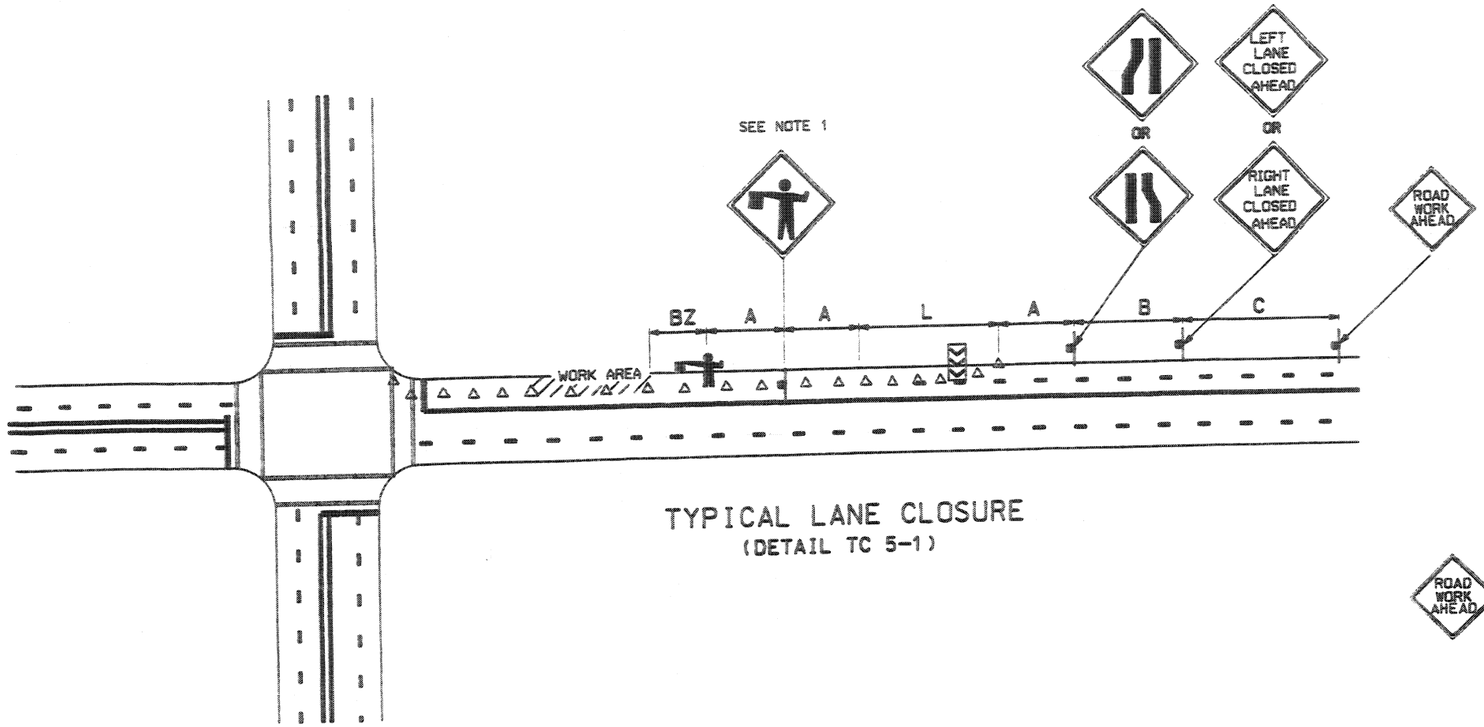

TYPICAL LANE CLOSURE
(DETAIL TC 5-1)

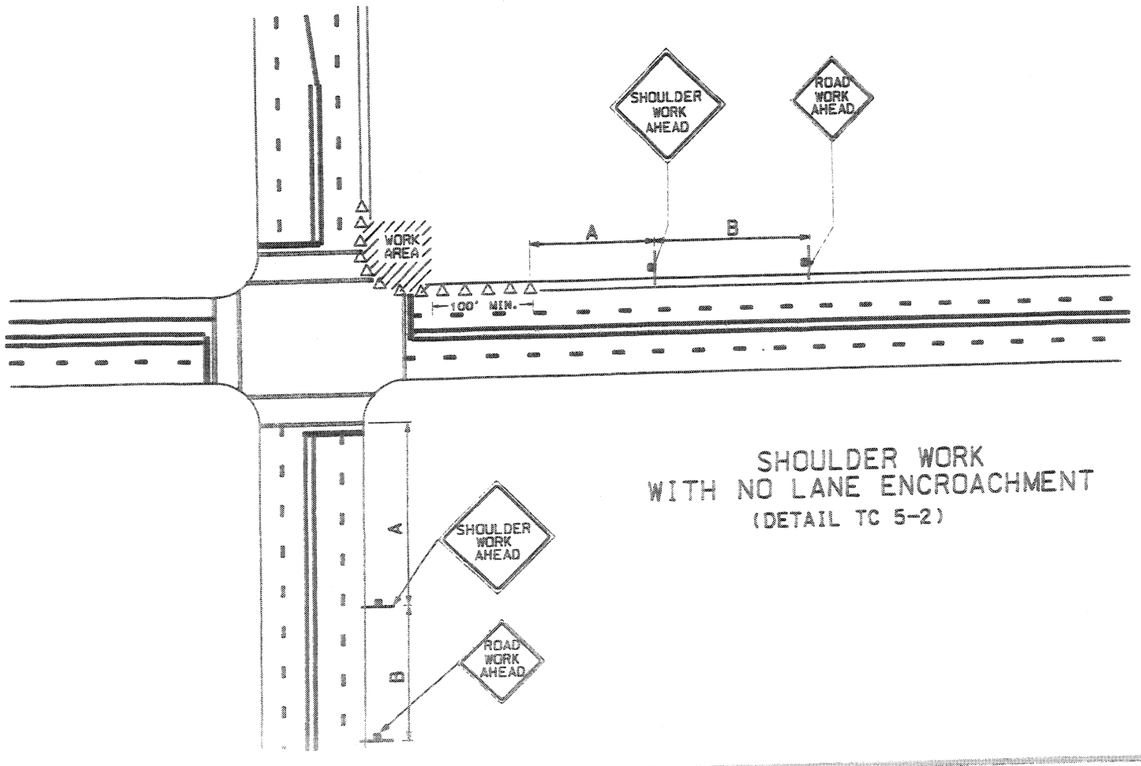

SHOULDER WORK
WITH NO LANE ENCROACHMENT
(DETAIL TC 5-2)

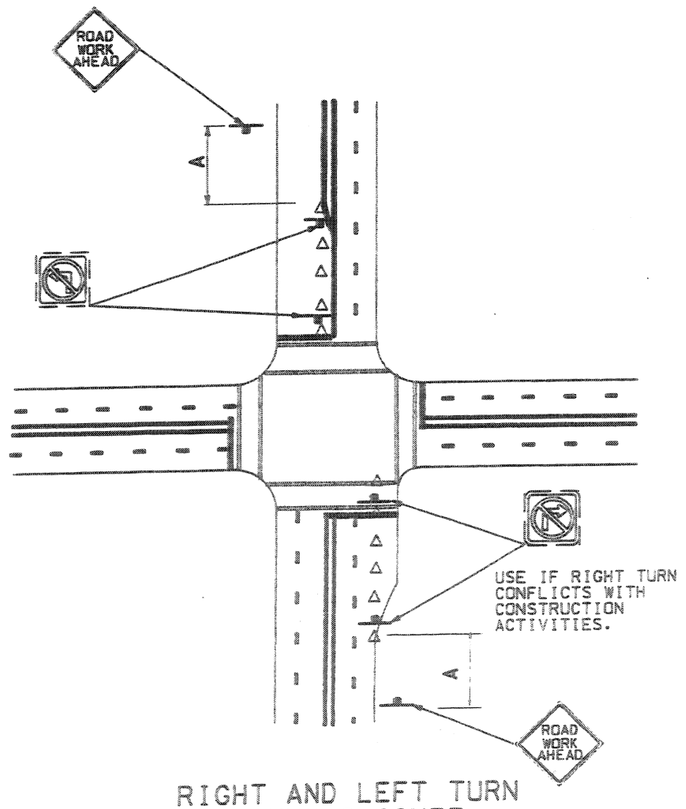

RIGHT AND LEFT TURN
LANES CLOSURE
(DETAIL TC 5-3)

NOTES:

1. FLAGGING IS OPTIONAL WITH LANE CLOSURE.
2. MAINTAIN PEDESTRIAN TRAFFIC AT EXISTING CROSSWALKS AND ON EXISTING SIDEWALKS. WHEN PEDESTRIAN TRAFFIC CANNOT BE MAINTAINED REROUTE ACCORDING TO STD DWG TC 6.
3. PROVIDE A MINIMUM 10' TRAFFIC LANE IN EACH DIRECTION. IF THIS CANNOT BE DONE USE A FLAGGING OPERATION AS PER STD DWG TC 14.
4. SEE STD DWG TC 2B FOR TAPER, BUFFER, AND SIGN SPACING CHART.

REVISIONS				
NO.	DATE	APPR	REMARKS	

UTAH DEPARTMENT OF TRANSPORTATION
STANDARD DRAWINGS FOR ROAD AND BRIDGE CONSTRUCTION
SALT LAKE CITY, UTAH

RECOMMENDED FOR APPROVAL — JULY 03,2002 DATE

CHAIRMAN STANDARDS COMMITTEE

APPROVED — JULY 03,2002 DATE

DEPUTY DIRECTOR

TRAFFIC CONTROL
URBAN INTERSECTION
WITH ROADWAY UNDER
50 MPH

STANDARD DRAWING TITLE

STD DWG
TC 5

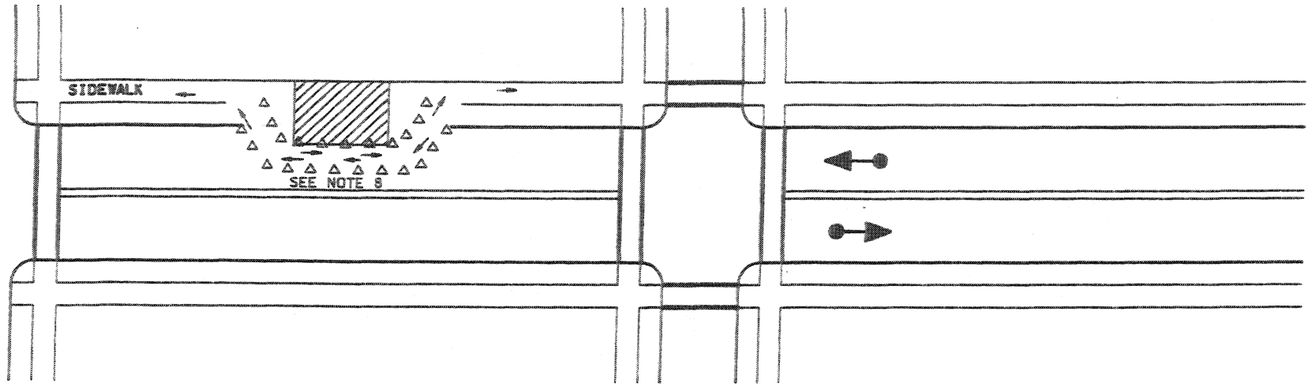

TEMPORARY WALKWAY
(DETAIL TC 6-1)
SEE NOTE 1

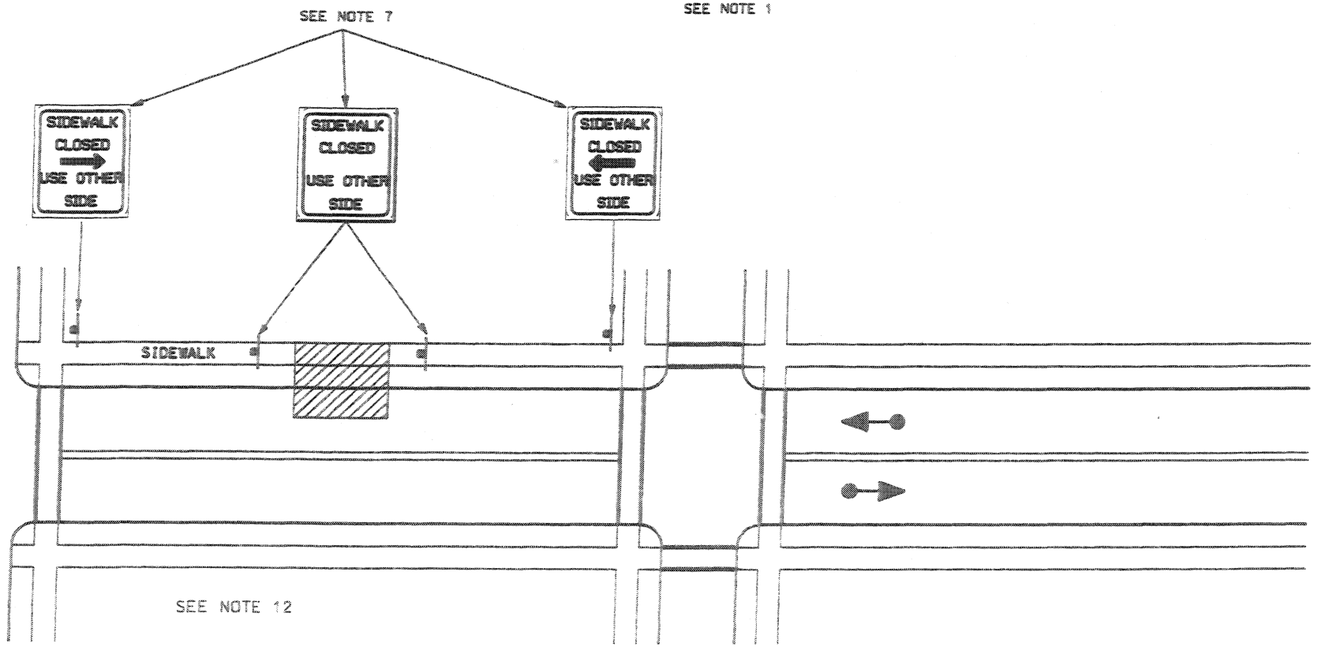

ALTERNATE ROUTE
(DETAIL TC 6-2)
SEE NOTE 1

NOTES:

1. ONLY THE TRAFFIC CONTROL DEVICES CONTROLLING PEDESTRIAN FLOWS ARE SHOWN. OTHER DEVICES ARE NEEDED TO CONTROL TRAFFIC ON THE STREET. USE LANE CLOSURE SIGNING OR ROAD NARROWS SIGNS, AS NEEDED.
2. PROVIDE A TEMPORARY WALKWAY AROUND CONSTRUCTION AREA IF WALKWAY IS CLOSED TO PEDESTRIANS. IF WALKWAY CANNOT BE PROVIDED DIRECT PEDESTRIANS TO ALTERNATE ROUTES. (SEE DETAIL TC 6-1)
3. CONSTRUCT WALKWAY A MINIMUM OF 48" WIDE AND COVER WHEN POTENTIAL OF FALLING MATERIAL EXIST.
4. CONSTRUCT WALKWAY WITH A WOOD FLOOR OR PAVED SURFACE SO THAT IT IS TRAVERSABLE BY A WHEELCHAIR.
5. WHEN SIDEWALKS EXIST ON BOTH SIDES OF STREET COMPLETE WORK ON ONE SIDE AND REOPEN PRIOR TO STARTING WORK ON THE OTHER SIDE.
6. MOUNT SIGNS 6' MINIMUM HEIGHT.
7. USE A SIGN 24" X 36" MINIMUM. SIGN LEGEND TO BE 4" MINIMUM. SERIES "C" WITH AN ARROW 4" X 12".
8. USE CHANNELIZING DEVICES SPACED 10' ON CENTER AND CONNECTED TO EACH OTHER WITH AN ORANGE, RED, OR YELLOW POLYVINYL RIBBON OR STREAMER 4" OR GREATER IN WIDTH.
9. USE A 20' CORNER RADIUS TO DEVELOP A TEMPORARY WALKWAY AROUND A CORNER.
10. DIRECT PEDESTRIANS TO AN INTERSECTION OR MARKED CROSSWALK AS AN ALTERNATE ROUTE WHEN POSSIBLE.
11. CONSULT REGION TRAFFIC ENGINEER WHEN SCHOOL ROUTING PLANS ARE AFFECTED.
12. DO NOT DIRECT PEDESTRIANS TO OPPOSITE SIDE IF SIDEWALK DOES NOT EXIST.

REVISIONS

NO.	DATE	APPR	REMARKS

UTAH DEPARTMENT OF TRANSPORTATION
STANDARD DRAWINGS FOR ROAD AND BRIDGE CONSTRUCTION
SALT LAKE CITY, UTAH

RECOMMENDED FOR APPROVAL — JULY 03,2002 DATE

CHAIRMAN STANDARDS COMMITTEE
APPROVED — JULY 03,2002 DATE

DEPUTY DIRECTOR

STANDARD DRAWING TITLE
TRAFFIC CONTROL
PEDESTRIAN ROUTING

STD DWG
TC 6

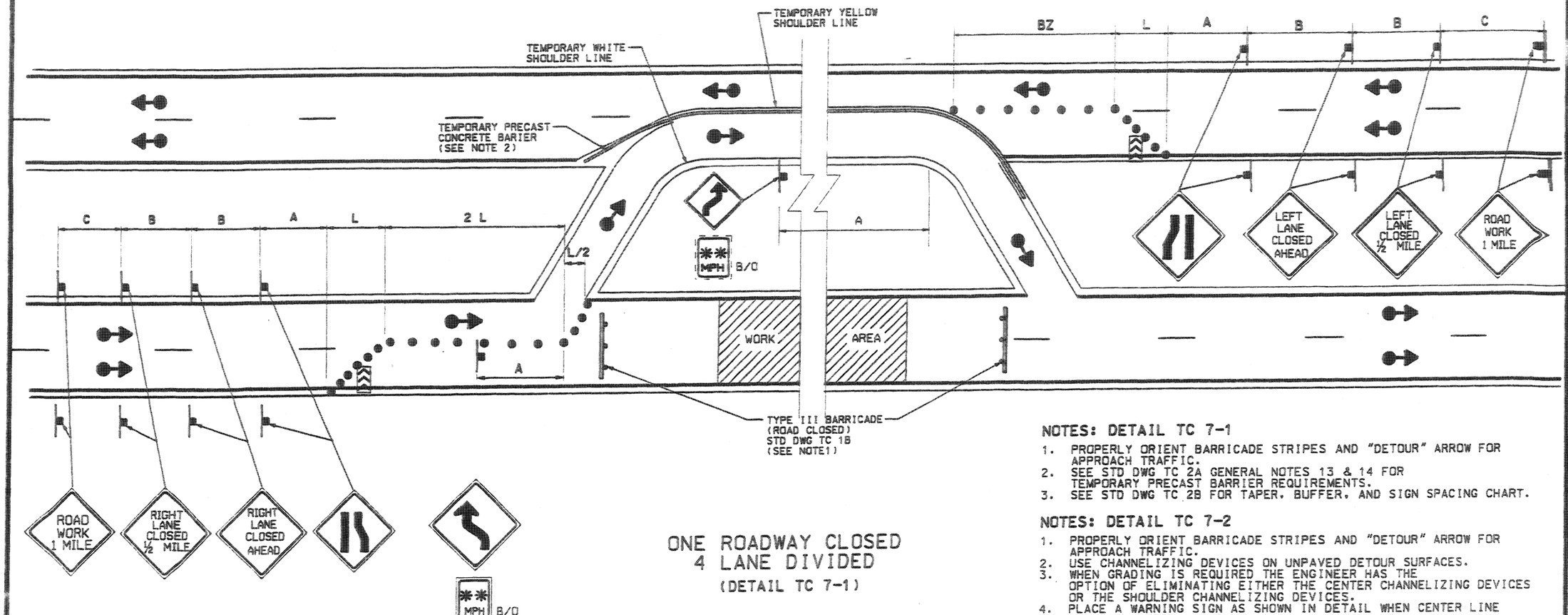

ONE ROADWAY CLOSED
4 LANE DIVIDED
(DETAIL TC 7-1)

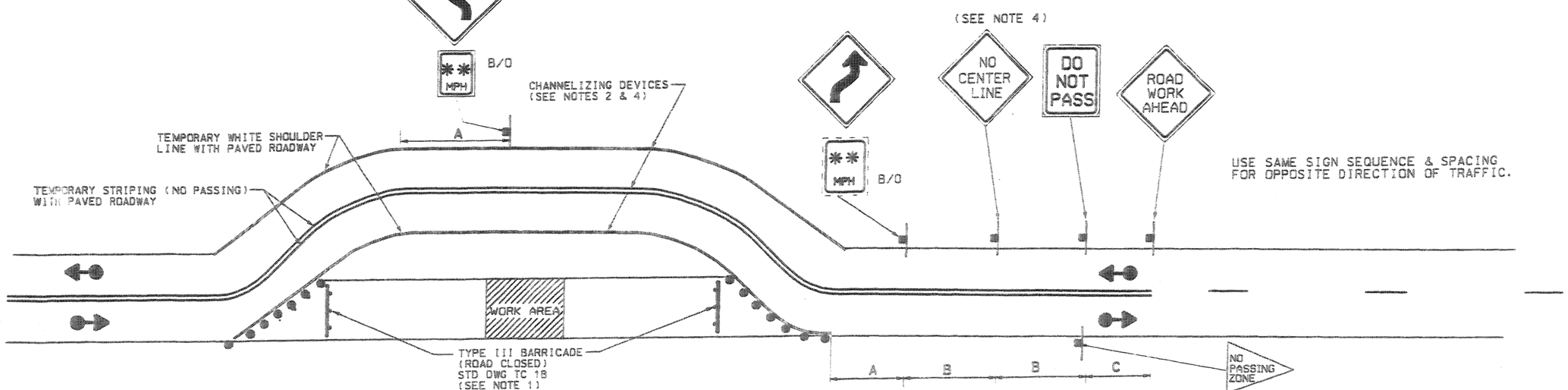

ROADWAY CLOSED (DETOUR)
2 LANE, 2 WAY TRAFFIC
(DETAIL TC 7-2)

NOTES: DETAIL TC 7-1

1. PROPERLY ORIENT BARRICADE STRIPES AND "DETOUR" ARROW FOR APPROACH TRAFFIC.
2. SEE STD DWG TC 2A GENERAL NOTES 13 & 14 FOR TEMPORARY PRECAST BARRIER REQUIREMENTS.
3. SEE STD DWG TC 2B FOR TAPER, BUFFER, AND SIGN SPACING CHART.

NOTES: DETAIL TC 7-2

1. PROPERLY ORIENT BARRICADE STRIPES AND "DETOUR" ARROW FOR APPROACH TRAFFIC.
2. USE CHANNELIZING DEVICES ON UNPAVED DETOUR SURFACES.
3. WHEN GRADING IS REQUIRED THE ENGINEER HAS THE OPTION OF ELIMINATING EITHER THE CENTER CHANNELIZING DEVICES OR THE SHOULDER CHANNELIZING DEVICES.
4. PLACE A WARNING SIGN AS SHOWN IN DETAIL WHEN CENTER LINE IS ELIMINATED.
5. SEE STD DWG TC 2B FOR TAPER, BUFFER, AND SIGN SPACING CHART.

REVISIONS

NO.	DATE	APPR.	REMARKS

UTAH DEPARTMENT OF TRANSPORTATION
STANDARD DRAWINGS FOR ROAD AND BRIDGE CONSTRUCTION
SALT LAKE CITY, UTAH

RECOMMENDED FOR APPROVAL — JULY 03,2002 DATE

CHAIRMAN STANDARDS COMMITTEE APPROVED — JULY 03,2002 DATE

DEPUTY DIRECTOR

TRAFFIC CONTROL
ROAD CLOSED, DETOUR

STANDARD DRAWING TITLE

STD DWG
TC 7

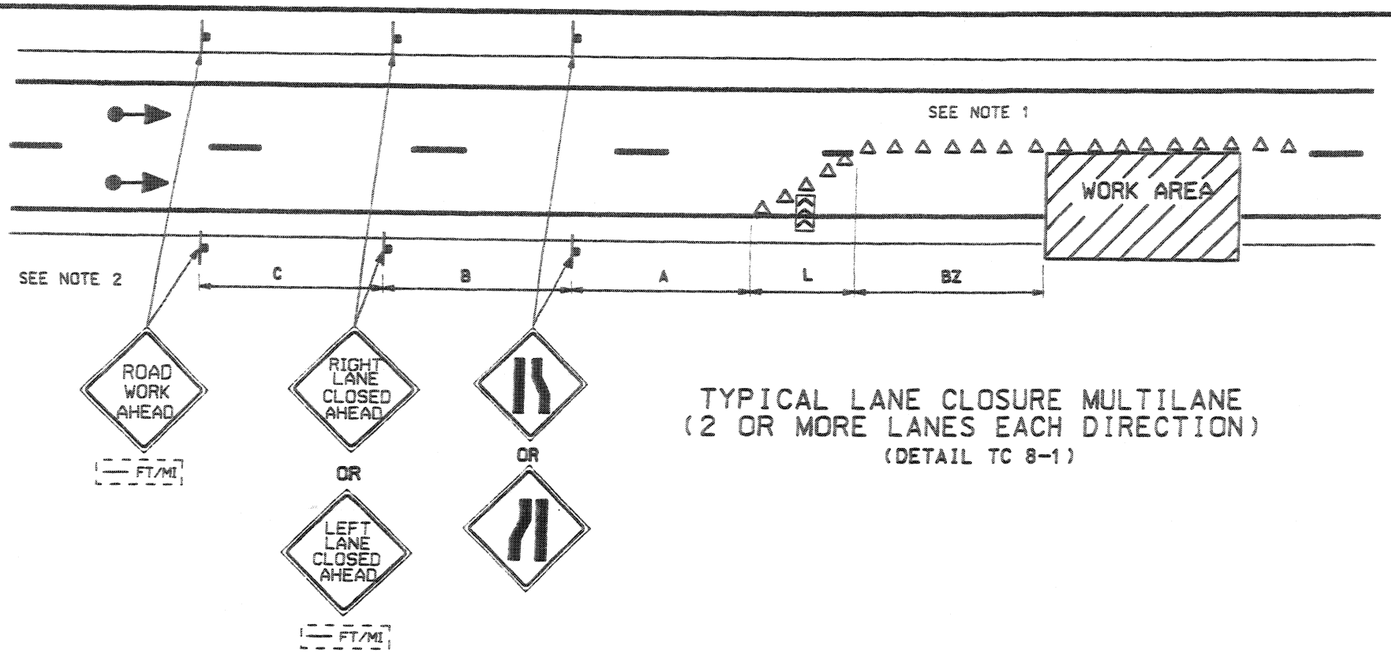

TYPICAL LANE CLOSURE MULTILANE
(2 OR MORE LANES EACH DIRECTION)
(DETAIL TC 8-1)

NOTES: DETAIL TC 8-1

1. USE PLASTIC DRUMS FOR ALL CHANNELIZING DEVICES FOR SPEEDS 50 MPH AND GREATER.
2. PLACE SIGNS IN MEDIAN/LEFT SHOULDER WHEN CONDITIONS PERMIT.
3. SEE STD DWG TC 2B FOR TAPER, BUFFER ZONE, AND SIGN SPACING CHART.

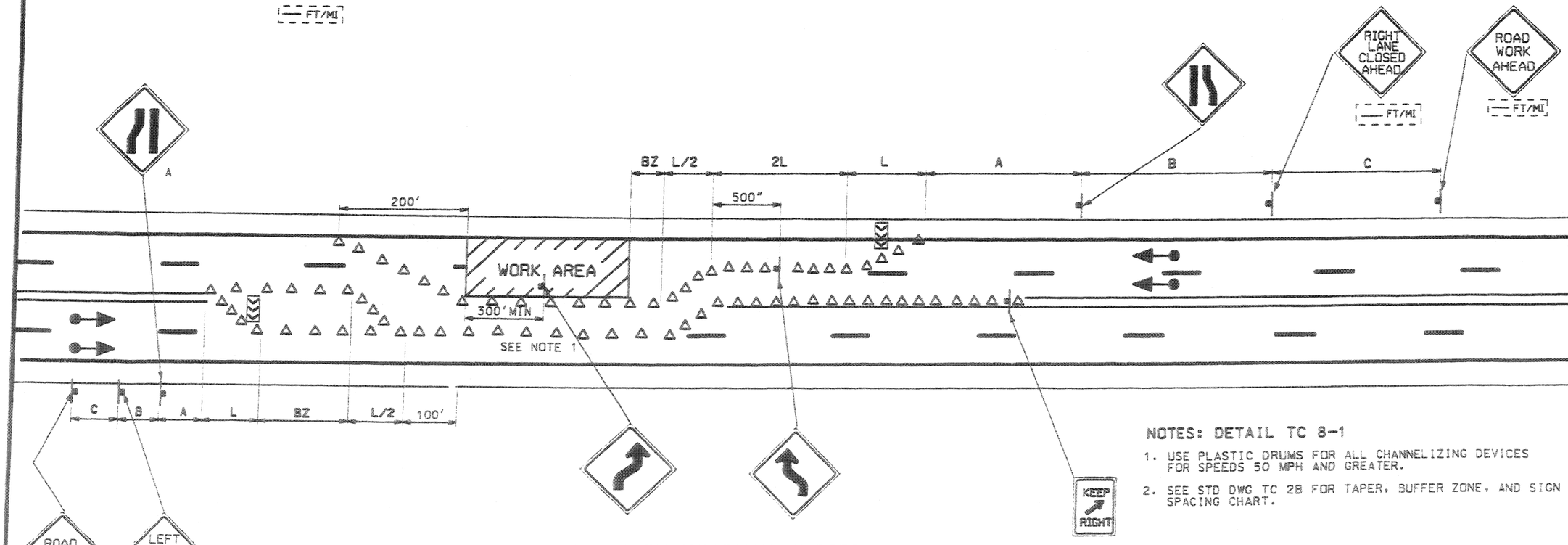

HALF OF ROADWAY CLOSED
4 LANE UNDIVIDED
(DETAIL TC 8-2)

NOTES: DETAIL TC 8-1

1. USE PLASTIC DRUMS FOR ALL CHANNELIZING DEVICES FOR SPEEDS 50 MPH AND GREATER.
2. SEE STD DWG TC 2B FOR TAPER, BUFFER ZONE, AND SIGN SPACING CHART.

REVISIONS

NO.	DATE	APPR	REMARKS

UTAH DEPARTMENT OF TRANSPORTATION
STANDARD DRAWINGS FOR ROAD AND BRIDGE CONSTRUCTION
SALT LAKE CITY, UTAH

RECOMMENDED FOR APPROVAL — JULY 03 2002 DATE

CHAIRMAN STANDARDS COMMITTEE APPROVED — JULY 03 2002 DATE

DEPUTY DIRECTOR

STANDARD DRAWING TITLE

TRAFFIC CONTROL LANE CLOSURE

STD DWG
TC 8

NOTES:

1. USE A FLAGGER AT ALL INTERSECTING ROADWAYS. REFER TO STANDARD SPECIFICATION 01554, ARTICLE 3.5 A. FOR REQUIREMENT AT OPERATING TRAFFIC SIGNALS.
2. PROVIDE FLAGGING IF TURNING TRAFFIC CONFLICTS WITH ONE WAY TRAFFIC.
3. PROVIDE A DETOUR WHEN ROAD CLOSURE EXCEEDS 24 HOURS.
4. SEE STD DWG TC 2B FOR TAPER, BUFFER ZONE, AND SIGN SPACING CHART.

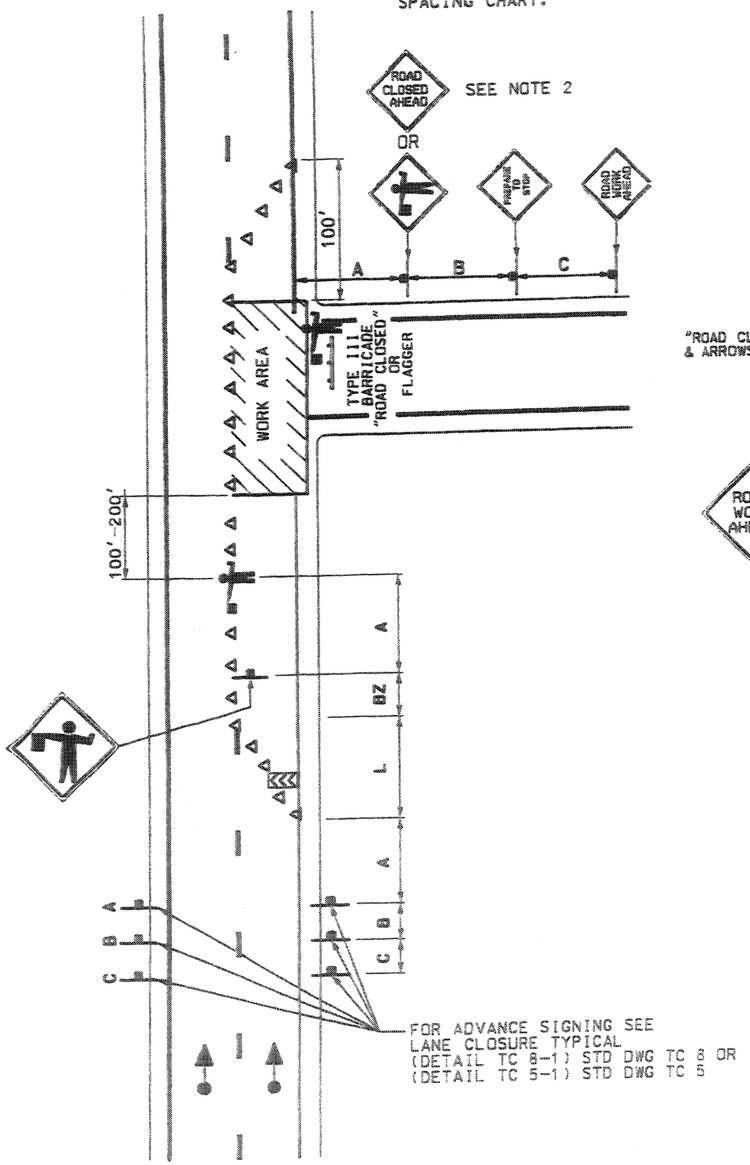

FLAGGING OPERATION - ONE WAY WITH POTENTIAL ENCROACHMENT BY WORK VEHICLE

(DETAIL TC 14-1)

USE SAME SIGN SEQUENCE, SPACING, & FLAGGER FOR OPPOSITE DIRECTION OF TRAFFIC.

"ROAD CLOSED" BARRICADE & ARROWS AS PER STD DWG TC 18

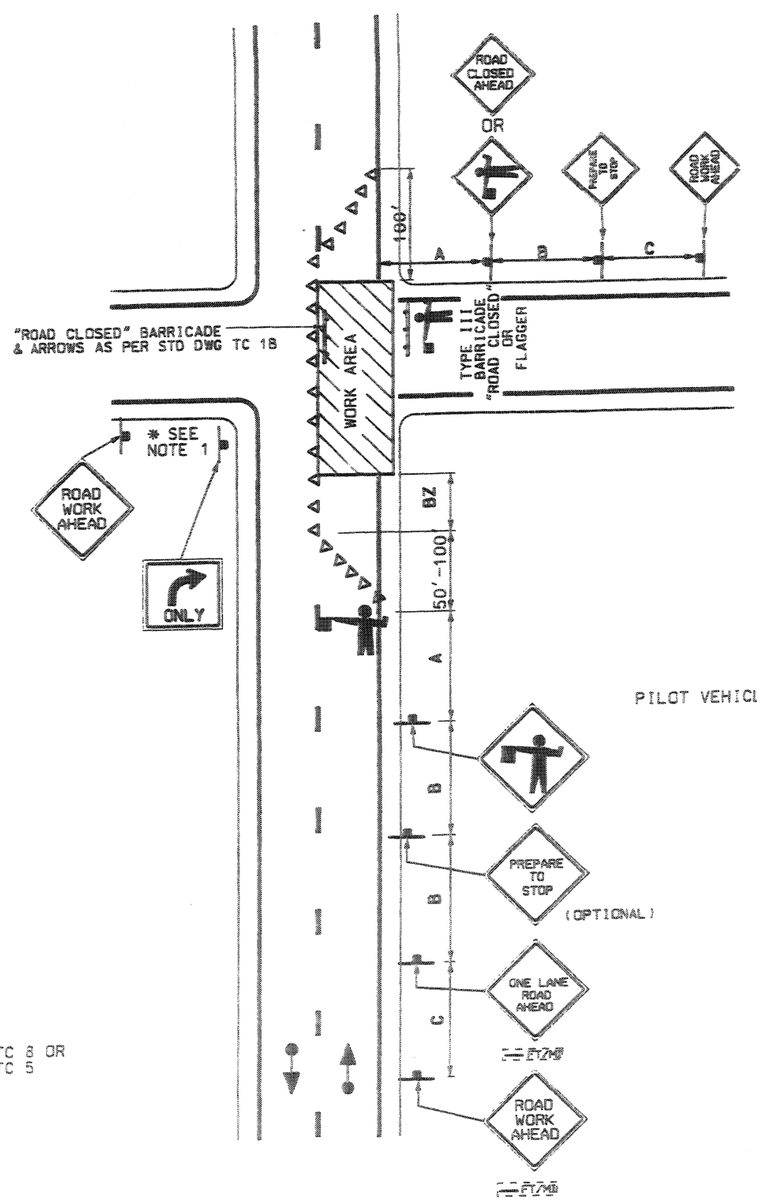

FLAGGING OPERATION - TWO WAY WITH ONE LANE CLOSED

(DETAIL TC 14-2)

USE SAME SIGN SEQUENCE, SPACING, & FLAGGER FOR OPPOSITE DIRECTION OF TRAFFIC.

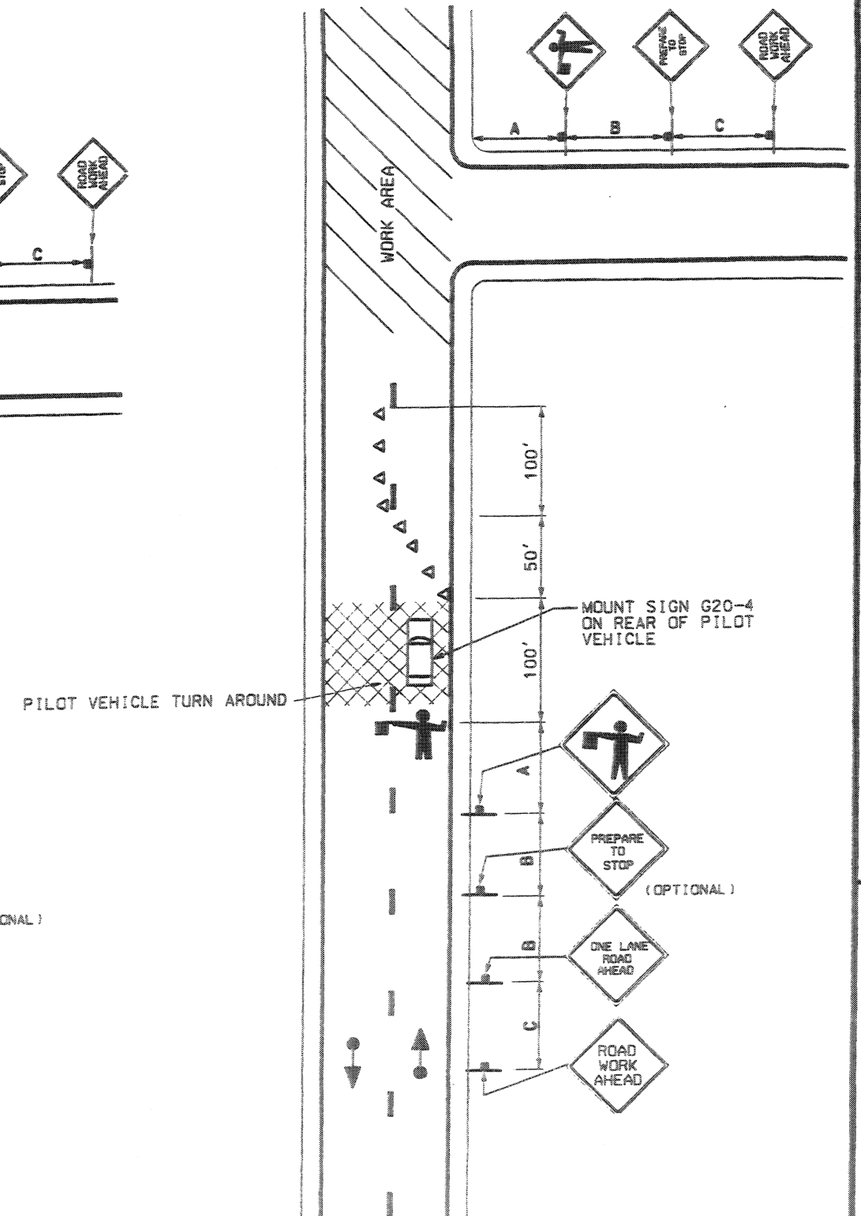

FLAGGING OPERATIONS WITH USE OF PILOT VEHICLE

(DETAIL TC 14-3)

REVISIONS

NO.	DATE	APPR.	REMARKS

UTAH DEPARTMENT OF TRANSPORTATION

STANDARD DRAWINGS FOR ROAD AND BRIDGE CONSTRUCTION

SALT LAKE CITY, UTAH

RECOMMENDED FOR APPROVAL — JULY 03,2002 DATE

CHAIRMAN STANDARDS COMMITTEE

APPROVED — JULY 03,2002 DATE

DEPUTY DIRECTOR

STANDARD DRAWING TITLE

TRAFFIC CONTROL FLAGGING OPERATION

STD DWG TC 14

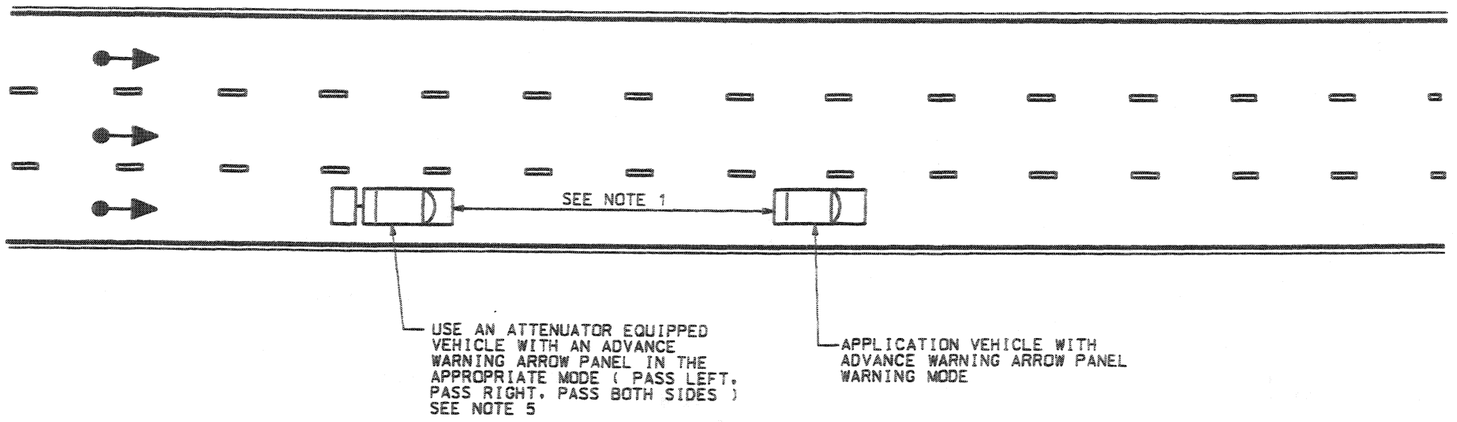

MULTILANE
LANE LINES & SHOULDER
(DETAIL TC 16-1)

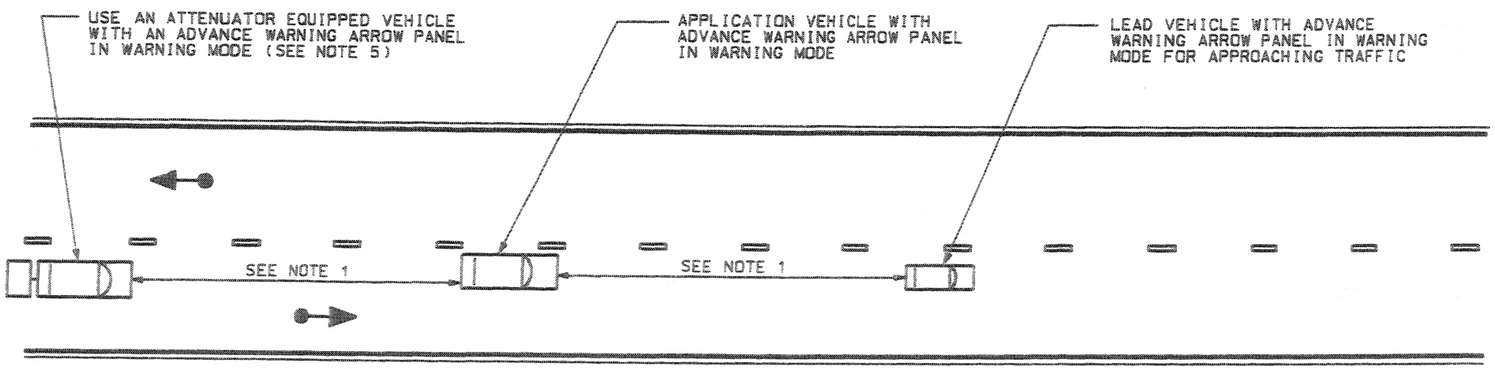

TWO LANE-TWO WAY
CENTER & SHOULDER
(DETAIL TC 16-2)

NOTES:

1. DO NOT EXCEED 300' SPACING BETWEEN THE APPLICATING TRUCK AND THE FOLLOW OR LEAD VEHICLE.
2. NO STATIC SIGNS ARE REQUIRED WITH THESE OPERATIONS.
3. ALL EQUIPMENT TO HAVE ROTARY STROBE LIGHTS AND EMERGENCY FLASHERS IN OPERATION.
4. USE TYPE B ADVANCED WARNING ARROW PANEL. SEE STD DWG TC 1A.
5. USE NCHRP-350 APPROVED TRUCK MOUNTED ATTENUATOR (TMA) MEETING THE REQUIREMENTS FOR THE POSTED SPEED LIMIT.

   TL-2 RATED SYSTEM FOR SPEEDS 45 ≤ MPH.
   TL-3 RATED SYSTEM FOR SPEEDS 50 ≥ MPH.

REVISIONS

NO.	DATE	APPR.	REMARKS

UTAH DEPARTMENT OF TRANSPORTATION
STANDARD DRAWINGS FOR ROAD AND BRIDGE CONSTRUCTION
SALT LAKE CITY, UTAH

RECOMMENDED FOR APPROVAL — JULY 03,2002 DATE
CHAIRMAN STANDARDS COMMITTEE APPROVED — JULY 03,2002 DATE
DEPUTY DIRECTOR

STANDARD DRAWING TITLE
TRAFFIC CONTROL
PAVEMENT MARKING

STD DWG
TC 16

NOTE:
1. SEE STD DWG TC 28 FOR TAPER, BUFFER, AND SIGN SPACING CHART.

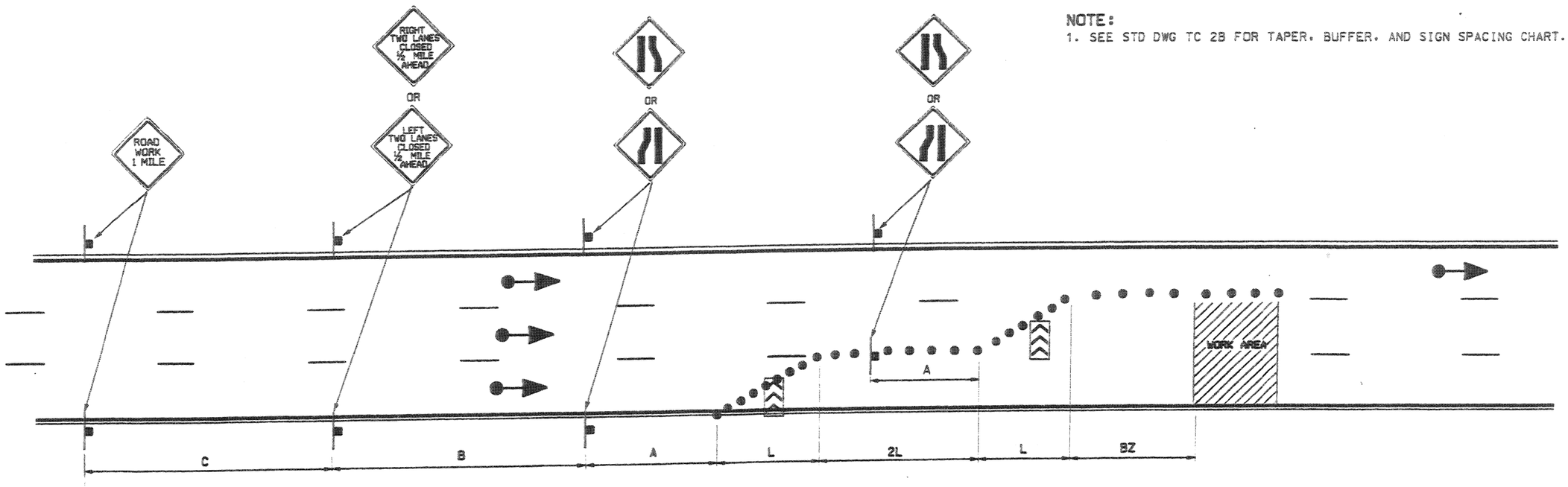

TWO LANES CLOSURE
(DETAIL TC 9-1)

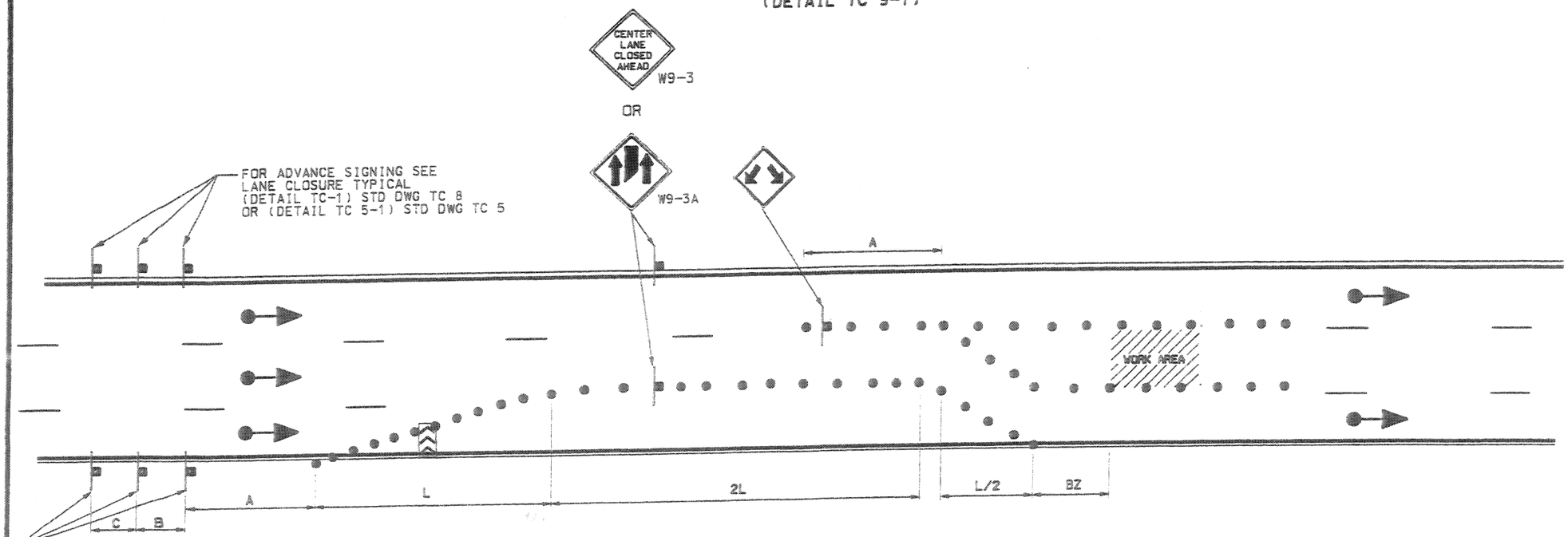

CENTER LANE CLOSURE
(DETAIL TC 9-2)

REVISIONS

NO.	DATE	APPR.	REMARKS

UTAH DEPARTMENT OF TRANSPORTATION
STANDARD DRAWINGS FOR ROAD AND BRIDGE CONSTRUCTION
SALT LAKE CITY, UTAH

RECOMMENDED FOR APPROVAL — JULY 03,2002 DATE

CHAIRMAN STANDARDS COMMITTEE
APPROVED — JULY 03,2002 DATE

DEPUTY DIRECTOR

STANDARD DRAWING TITLE
TRAFFIC CONTROL
MULTILANE CLOSURE

STD DWG
TC 9