UTAH
DEPARTMENT OF TRANSPORTATION

SEE SHEET 1A FOR INDEX TO PLAN

SHEET NO. 1

U.S. Standard Units
(Inch-Pound Units)

PLANS OF PROPOSED STATE ROAD
STATE PROJECT
*SP-15-1(20)13
WASHINGTON INTERCHANGE AT RP 13

NEW INTERCHANGE CONSTRUCTION
WASHINGTON COUNTY
LENGTH 1.270 MILES
R.P. 12.73 TO R.P. 14.00

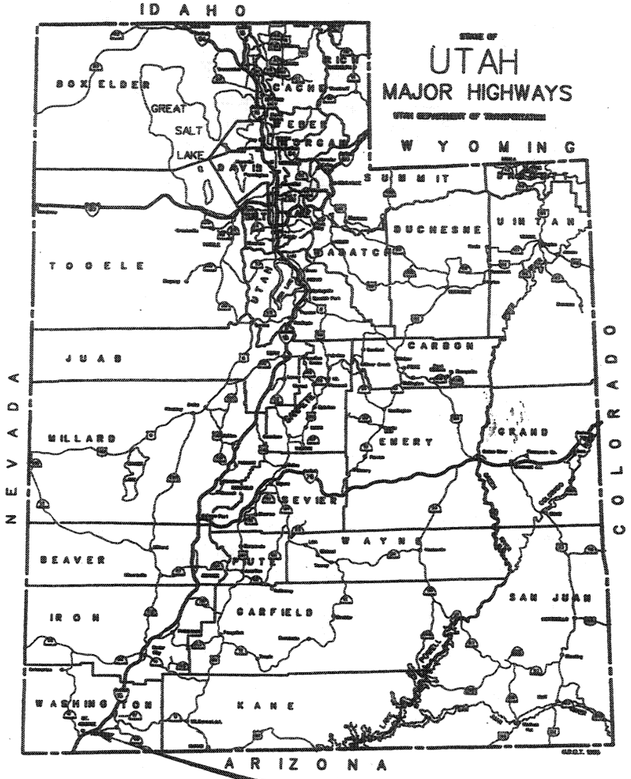

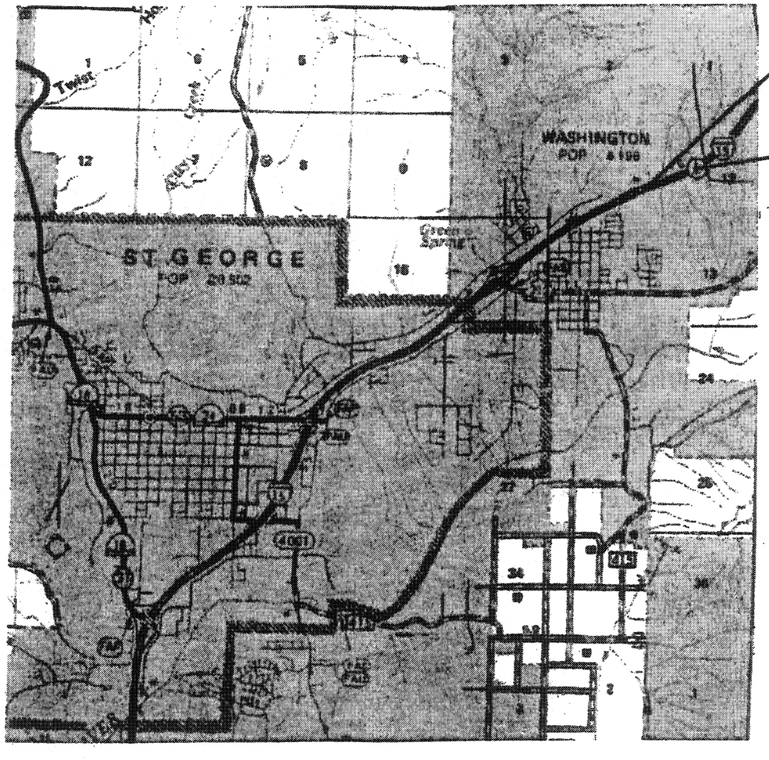

STA. 284+50.00
BEG. PROJECT
*SP-15-1(20)13
R.P. 12.73

STA. 351+80.54
END PROJECT
*SP-15-1(20)13
R.P. 14.00

T. 42 S. R. 15 W.
SEC. 11 & 12
S.L.B. & M.

UTAH DEPARTMENT OF TRANSPORTATION

APPROVED FOR
USE BY UDOT _____ 2003

_____
REGION FOUR DIRECTOR

24-NOV-2003 DGN: File:\NVProjects\2528.02\Sheets_Files\Roadway_Design\2528_title.dgn

INDEX TO SHEETS

SHEET NO.	DESCRIPTION
1	TITLE SHEET
1A	INDEX TO SHEETS
1B & 1C	STANDARD DRAWING INDEX SHEETS
1D	STORM WATER POLLUTION PREVENTION PLAN
TS-1 to TS-11	TYPICAL SECTION SHEETS
DT-1 to DT-10	DETAIL SHEETS
SM-1 to SM-11	SUMMARY SHEETS
RD-1 to RD-9	ROADWAY PLAN SHEETS
RP-1 to RP-5	PROFILE SHEETS
DR-1 to DR-9	DRAINAGE SHEETS
SS-1 to SS-9	SIGNING & STRIPING SHEETS
LS-1 to LS-12	LANDSCAPE SHEETS
IR-1 to IR-8	IRRIGATION SHEETS
LT-1 to LT-5	LIGHTING SHEETS

INDEX TO SHEETS

SHEET NO.	DESCRIPTION
SG-1 to SG-2	SIGNAL SHEETS
RW-1 to RW-9	RIGHT OF WAY SHEETS
SD-1	SOIL DATA SHEET

STRUCTURAL DRAWINGS

STRUCTURE NO.	DESCRIPTION	NO. OF SHEETS
C-922	I-15 OVERPASS STRUCTURE	30
H-2008	72" DIA. PIPE HEADWALL	2
H-2009	54" DIA. PIPE HEADWALL	2
E-2519	10' X 8' BOX CULVERT	5
E1E-1330	10' X 8' BOX CULVERT	4
E1E-1331	10' X 8' BOX CULVERT	10
E-1330	FOR INFORMATION ONLY	2
E-1331	FOR INFORMATION ONLY	2

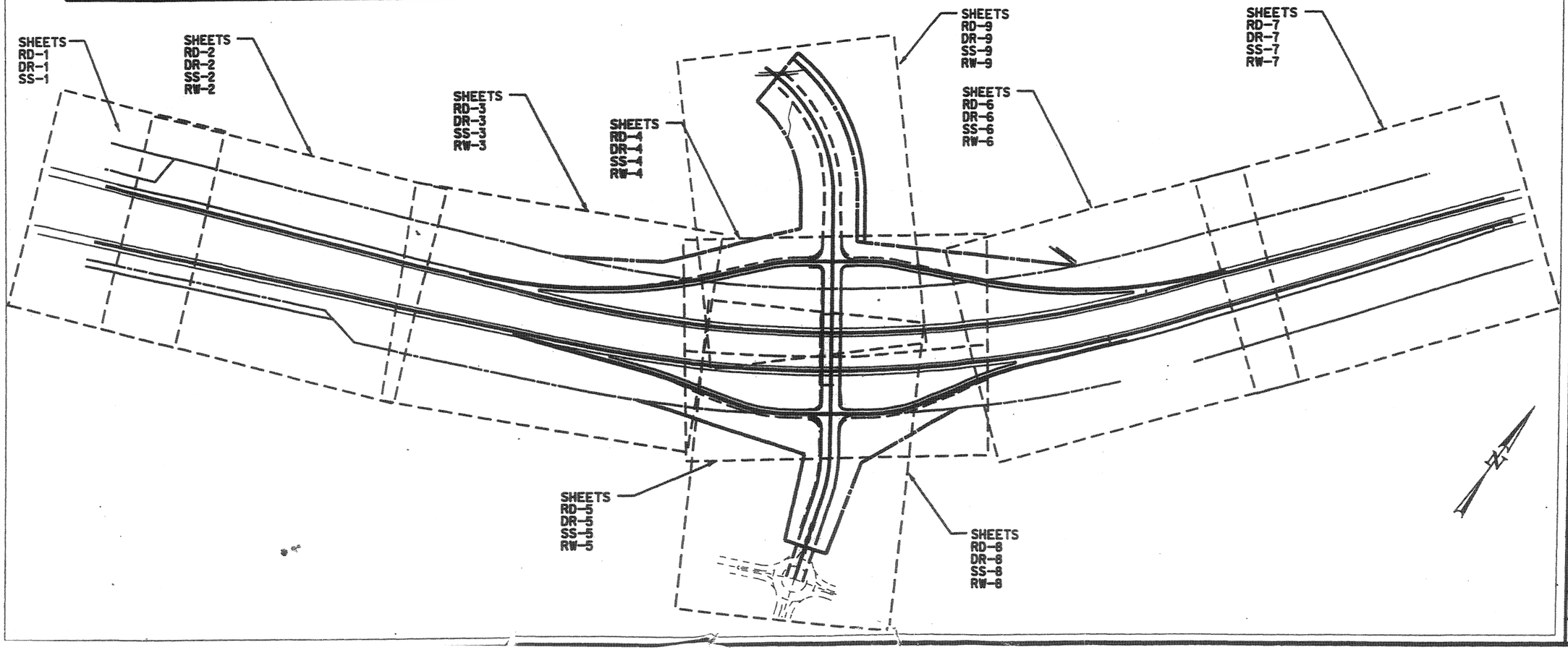

UTAH DEPARTMENT OF TRANSPORTATION
REGION 4 — RICHFIELD, UTAH
ROADWAY DESIGN

WASHINGTON INTERCHANGE @ RP 13

INDEX TO SHEETS

PROJECT NUMBER #SP-15-1(20)13

WASHINGTON COUNTY

SHEET NO. 1-A

NO.	DATE	REVISIONS	REMARKS
		ORIGINAL SUBMISSION FOR AUTHORIZATION	
		REVISED PER COMMENTS RECEIVED	

DESIGN S.HO 5/02 CHECK CGM 5/02
DRAWN S.HO 5/02 CHECK CGM 5/02
QUANT. S.HO 5/02 CHECK CGM 5/02

REVIEW
DATE CGM 1/03
BY CGM 1/03

APPROVAL RECOMMENDED: DATE — PROJECT DESIGN ENGINEER
APPROVED FOR UDOT BY UDOT: DATE — PRECONSTRUCTION ENGINEER

UTAH DEPARTMENT OF TRANSPORTATION

STANDARD DRAWINGS FOR ROAD AND BRIDGE CONSTRUCTION

	DWG. NO.	DESCRIPTION	DATE
		Advanced Traffic Management System (AT)	
X	AT 1	LEGEND SHEET	07-03-02
	AT 2	RAMP METER DETAILS	07-03-02
	AT 3	RAMP METER SIGN PANEL	07-03-02
	AT 4	TYPICAL RAMP METER SIGNAL HEAD MOUNTING	07-03-02
	AT 5	LOOP INSTALLATION	07-03-02
X	AT 6	CONDUIT DETAILS	07-03-02
X	AT 7	POLYMER-CONCRETE JUNCTION BOX DETAILS	07-03-02
X	AT 8	ATMS CABINET W/120V DISCONNECT	07-03-02
	AT 9	ATMS CAB WITH STEPDOWN TRANSFORMER	07-03-02
	AT 10	DOMED CCTV DETAILS	07-03-02
	AT 11	CCTV POLE DETAIL	07-03-02
	AT 12	CCTV POLE FOUNDATION FOR DEDICATED CCTV POLE	07-03-02
	AT 13	120V VMS CAB FOUNDATION DETAILS	07-03-02
	AT 14	WEIGHT IN MOTION PIEZO DETAIL	07-03-02
		Barriers (BA)	
X	BA 1A	PRECAST CONCRETE FULL BARRIER STANDARD SECTION	07-03-02
X	BA 1B	PRECAST CONCRETE FULL BARRIER STANDARD SECTION	07-03-02
	BA 2	PRECAST CONCRETE HALF BARRIER STANDARD SECTION	07-03-02
	BA 3	CAST IN PLACE CONSTANT SLOPE BARRIER	07-03-02
X	BA 4	BEAM GUARDRAIL HARDWARE	07-03-02
X	BA 4A	GUARDRAIL TRANSITION	07-03-02
X	BA 4B	BEAM GUARDRAIL INSTALLATIONS	07-03-02
	BA 5	TRAFFIC CONTROL CABLE	07-03-02
		Catch Basins and Cleanouts (CB)	
	CB 1	STANDARD CATCH BASIN	07-03-02
X	CB 2	CURB INLET CATCH BASIN	07-03-02
	CB 3	STANDARD TRANSITION CONCRETE LINED DITCH TO PIPE OR DIVERSION BOX	07-03-02
	CB 4	SOLID COVER FOR STD DWG DB 1 MS-18 LOADING	07-03-02
	CB 5	STANDARD SCREW GATE AND FRAME	07-03-02
	CB 6A	STANDARD DROP INLET DETAILS GENERAL NOTES AND INSTALLATION DETAIL	07-03-02
	CB 6B	STANDARD CATCH BASIN AND CLEANOUT BOX DROP INLET TYPE "A" DETAIL	07-03-02
	CB 6C	STANDARD CATCH BASIN AND CLEANOUT BOX DROP INLET TYPE "B" DETAILS	07-03-02
X	CB 6D	STANDARD CATCH BASIN AND CLEANOUT BOX DROP INLET TYPE "C" DETAILS	07-03-02
	CB 6E	STANDARD CATCH BASIN AND CLEANOUT BOX DROP INLET WITH ATTACHED APRON DETAILS	07-03-02
	CB 6F	STANDARD CATCH BASIN AND CLEANOUT BOX DROP INLET WITH ATTACHED APRON DETAILS	07-03-02
	CB 6G	STANDARD CATCH BASIN AND CLEANOUT BOX DROP INLET TYPE "D" DETAILS	07-03-02
	CB 6H	STANDARD CATCH BASIN AND CLEANOUT BOX DROP INLET TYPE "D" TABLES	07-03-02
	CB 7	STANDARD CURB AND GUTTER DROP INLET	07-03-02
	CB 8A	DOUBLE CATCH BASIN	07-03-02
	CB 8B	DOUBLE CATCH BASIN	07-03-02

	DWG. NO.	DESCRIPTION	DATE
	CB 9A	STANDARD CATCH BASIN AND CLEANOUT BOX SITUATION & LAYOUT	07-03-02
	CB 9B	STANDARD CATCH BASIN AND CLEANOUT BOX SECTION DETAILS	07-03-02
	CB 9C	STANDARD CATCH BASIN AND CLEANOUT BOX SCHEDULE OF INSTALLATION 18" TO 42" RCP 12" TO 48" CMP	07-03-02
	CB 9D	STANDARD CATCH BASIN AND CLEANOUT BOX SCHEDULE OF INSTALLATION 48" TO 66" RCP 60" TO 78"CPM	07-03-02
X	CB 10A	STANDARD CATCH BASIN AND CLEANOUT BOX SITUATION & LAYOUT	07-03-02
X	CB 10B	STANDARD CATCH BASIN AND CLEANOUT BOX SECTION DETAILS	07-03-02
X	CB 10C	STANDARD CATCH BASIN AND CLEANOUT BOX SCHEDULE OF INSTALLATION 42" TO 60" RCP 48" TO 72" CMP	07-03-02
		Crash Cushions (CC)	
X	CC 1	CRASH CUSHION MARKINGS	07-03-02
	CC 2	CRASH CUSHION DRAINAGE DETAILS GUIDELINE A	07-03-02
X	CC 3	CRASH CUSHION DRAINAGE DETAILS GUIDELINE B	07-03-02
X	CC 4	DETAIL FOR PLACEMENT CRASH CUSHIONS TYPE A, B & D	07-03-02
	CC 5	GRADING & PLACEMENT DETAIL CRASH CUSHION TYPE C	07-03-02
	CC 6	CRASH CUSHION TYPE E SAND BARREL DETAILS	07-03-02
X	CC 7	GRADING & INSTALLATION DETAILS CRASH CUSHIONS TYPE F, TYPE G	07-03-02
	CC 8	GRADING & INSTALLATION DETAIL CRASH CUSHION TYPE H	07-03-02
		Diversion Boxes (DB)	
	DB 1A	STANDARD DIVERSION BOX/COVER PLATE/GRATING FOR 18"DIA. OR 24"DIA.PIPE	07-03-02
	DB 1B	STANDARD DIVERSION BOX HINGED LID DETAIL FOR 18" DIA OR 24" DIA.PIPE	07-03-02
	DB 1C	STANDARD DIVERSION BOX BICYCLE-SAFE GRATING DETAILS FOR 18"DIA. OR 24"DIA.PIPE	07-03-02
	DB 1D	STANDARD DIVERSION BOX THREE GATE BOX SECTIONS FOR 18"DIA. OR 24"DIA.PIPE	07-03-02
	DB 1E	STANDARD DIVERSION BOX THREE GATE BOX SECTIONS FOR 18"DIA. OR 24"DIA.PIPE	07-03-02
	DB 1F	STANDARD DIVERSION BOX THREE GATE BOX SECTIONS FOR 18"DIA. OR 24"DIA.PIPE	07-03-02
	DB 2A	STANDARD DIVERSION BOX W/INTERCHANGEABLE WALLS, BOTTOM SLAB, WALLS AND APRON DETAIL	07-03-02
	DB 2B	STANDARD DIVERSION BOX W/INTERCHANGEABLE WALLS, QUANTITIES SCHEDULE	07-03-02
	DB 2C	STANDARD DIVERSION BOX W/INTERCHANGEABLE WALLS, HAND SLIDE GATE DETAILS	07-03-02
	DB 2D	STANDARD DIVERSION BOX TYPE "G" HAND SLIDE GATE DETAILS	07-03-02
	DB 2E	STANDARD DIVERSION BOX HINGED LID (SOLID COVER PLATE) TYPE "A" DETAILS TYPE I PLAN	07-03-02
	DB 2F	STANDARD DIVERSION BOX HINGED LID (SOLID COVER PLATE) TYPE "A" DETAILS TYPE II PLAN	07-03-02
	DB 2G	STANDARD DIVERSION BOX HINGED LID SOLID COVER TYPE "B"DETAILS	07-03-02
	DB 2H	STANDARD DIVERSION BOX HINGED LID SOLID COVER TYPE "B" & "C"DETAILS	07-03-02
	DB 3A	STANDARD DIVERSION BOX WITH MANHOLE COVER SITUATION & LAYOUT	07-03-02
	DB 3B	STANDARD DIVERSION BOX WITH MANHOLE COVER UP TO 42" RCP AND UP TO 54" CMP	07-03-02
	DB 3C	STANDARD DIVERSION BOX WITH MANHOLE COVER 48"TO 72" RCP AND 60"TO 84" CMP	07-03-02

	DWG. NO.	DESCRIPTION	DATE
		Drainage (DG)	
X	DG 1	FILL HEIGHT FOR METAL PIPE (STEEL)	07-03-02
X	DG 2	FILL HEIGHT FOR METAL PIPE (ALUMINUM)	07-03-02
X	DG 3	MAXIMUM FILL HEIGHT AND END SECTIONS FOR HDPE AND PVC PIPES	07-03-02
X	DG 4	PIPE CULVERTS MINIMUM COVER	07-03-02
X	DG 5	PLASTIC PIPE, METAL PIPE OR PIPE ARCH CULVERT BEDDING	07-03-02
X	DG 6	PRECAST CONCRETE PIPE CULVERT	07-03-02
X	DG 7	GASKETTED JOINTS OR COUPLINGS BANDS FOR C.M.P.	07-03-02
X	DG 8	METAL CULVERT END SECTION	07-03-02
X	DG 9	MISCELLANEOUS PIPE DETAILS	07-03-02
		Environmental Controls (EN)	
X	EN 1	TEMPORARY EROSION CONTROL (CHECK DAMS)	07-03-02
X	EN 2	TEMPORARY EROSION CONTROL (SILT FENCE)	07-03-02
	EN 3	TEMPORARY EROSION CONTROL (SLOPE DRAIN AND TEMPORARY BERM)	07-03-02
	EN 4	TEMPORARY EROSION CONTROL (DROP INLET BARRIERS)	07-03-02
	EN 5	TEMPORARY EROSION CONTROL (SEDIMENT TRAP AND CURB INLET BARRIER)	07-03-02
		Fence and Gates (FG)	
	FG 1A	RIGHT OF WAY FENCE AND GATES (WOOD POST)	07-03-02
	FG 1B	RIGHT OF WAY FENCE AND GATES (WOOD POST)	07-03-02
X	FG 2A	RIGHT OF WAY FENCE AND GATES (METAL POST)	07-03-02
X	FG 2B	RIGHT OF WAY FENCE AND GATES (METAL POST)	07-03-02
X	FG 3	SWING GATES TYPE 1 FOR GATES LESS THAN 17'	07-03-02
	FG 4	DEER GATES	07-03-02
	FG 5	SWING GATES TYPE II FOR GATES WIDER THAN 17'	07-03-02
	FG 6	CHAIN LINK FENCE	07-03-02

X MARKED BOXES INDICATE DRAWINGS APPLICABLE TO THIS PROJECT

REVISIONS

NO.	DATE	APPR.	REMARKS
1			

UTAH DEPARTMENT OF TRANSPORTATION
STANDARD DRAWINGS FOR ROAD AND BRIDGE CONSTRUCTION
SALT LAKE CITY, UTAH

REVIEWED AND CHECKED — JULY 03,2002 DATE

CHECKED AND APPROVAL — JULY 03,2002 DATE

STANDARD ENGINEER

STANDARD DRAWING INDEX SHEET

STANDARD DRAWING TITLE

STD DWG 1-B

UTAH DEPARTMENT OF TRANSPORTATION
STANDARD DRAWINGS FOR ROAD AND BRIDGE CONSTRUCTION

	DWG. NO.	DESCRIPTION	DATE
		Grates, Frames and Trash Racks (GF)	
	GF 1	MANHOLE FRAME AND GRATED COVER	07-03-02
	GF 2	MANHOLE FRAME AND SOLID COVER	07-03-02
X	GF 3	RECTANGULAR GRATE & FRAME	07-03-02
	GF 4	DIRECTIONAL FLOW GRATE & FRAME	07-03-02
	GF 5	SOLID COVER & FRAME	07-03-02
X	GF 6	MANHOLE STEPS	07-03-02
	GF 7	STANDARD SCREW GATE & FRAME	07-03-02
	GF 8	2' x 2' GATE AND FRAME	07-03-02
	GF 9	28" x 24" DIRECTIONAL FLOW GRATE AND FRAME	07-03-02
	GF 10	STANDARD TRASH RACKS 90° ANGLE X-ING L	07-03-02
	GF 11	STANDARD TRASH RACKS	07-03-02
	GF 12	STANDARD TRASH RACKS	07-03-02
		General Road Work (GW)	
	GW 1	RAISED MEDIAN AND PLOWABLE END SECTION	07-03-02
X	GW 2	CONCRETE CURB AND GUTTER	07-03-02
X	GW 3	CONCRETE CURB AND GUTTER DETAILS	07-03-02
X	GW 4	CONCRETE DRIVEWAYS AND SIDEWALKS	07-03-02
X	GW 5	PEDESTRIAN ACCESS	07-03-02
X	GW 6	RIGHT OF WAY MARKER	07-03-02
	GW 7	NEWSPAPER AND MAILBOX STOP LAYOUT	07-03-02
	GW 8	NEWSPAPER AND MAILBOX SUPPORT HARDWARE	07-03-02
X	GW 9	DELINEATION HARDWARE	07-03-02
X	GW 10	DELINEATION APPLICATION	07-03-02
		Paving (PV)	
	PV 1	JOINTS FOR HIGHWAYS WITH CONCRETE TRAFFIC LANES AND SHOULDERS	07-03-02
X	PV 2	PAVEMENT/APPROACH SLAB DETAILS	07-03-02
	PV 3	CONCRETE PAVEMENT DETAILS FOR URBAN AND INTERSTATE	07-03-02
	PV 4	CONCRETE PAVEMENT DETAILS FOR URBAN AND INTERSTATE	07-03-02
	PV 5	URBAN CONCRETE PAVEMENT DETAILS	07-03-02
	PV 6	RUMBLE STRIPS	07-03-02
	PV 7	RUMBLE STRIPS -TYPICAL APPLICATION	07-03-02
		Signals (SL)	
	SL 1	TRAFFIC SIGNALS MAST ARM POLE AND LUMINAIRE EXTENSION	07-03-02
	SL 2	TRAFFIC SIGNALS MAST ARM DETAIL 25' THRU 65'	07-03-02
	SL 3	UNDERGROUND SERVICE PEDESTAL DETAIL	07-03-02
	SL 4	TRAFFIC SIGNALS MAST ARM POLE FOUNDATION	07-03-02
	SL 5	BREAKAWAY POST MOUNTED TRAFFIC SIGNAL POLE	07-03-02
	SL 6	POWER SOURCE DETAILS	07-03-02
	SL 7	SPAN WIRE SIGNAL POLE DETAIL	07-03-02
	SL 8	SIGNAL HEAD DETAILS	07-03-02
	SL 9	PEDESTRIAN SIGNAL ASSEMBLY	07-03-02
	SL 10	CONTROLLER BASE DETAIL	07-03-02
	SL 11	TRAFFIC SIGNALS LOOP DETECTOR DETAIL	07-03-02
X	SL 12	JUNCTION BOX DETAILS	07-03-02
	SL 13	TRAFFIC COUNTING LOOP DETECTOR DETAIL	07-03-02
X	SL 14	LIGHT POLE BREAKAWAY BASE	07-03-02
X	SL 15	LUMINARIE BREAKAWAY BASE DETAIL	07-03-02
	SL 16	SINGLE TRANSFORMER SUBSTATION DETAILS	07-03-02
X	SL 17	LIGHT POLE ANCHOR BASE	07-03-02
X	SL 18	LIGHT POLE FOUNDATION EXTENSION	07-03-02
		Signs (SN)	
	SN 1	BRIDGE LOAD LIMITS SIGNS	07-03-02
	SN 2	FLASHING SCHOOL SIGN	07-03-02
	SN 3	OVERHEAD SCHOOL FLASHER	07-03-02
	SN 4	FLASHING STOP SIGN	07-03-02
X	SN 5	TYPICAL INSTALLATION FOR MILEPOST SIGNS	07-03-02
	SN 6	NOT USED	07-03-02
X	SN 7	PLACEMENT OF GROUND MOUNTED SIGNS	07-03-02
X	SN 8	GROUND MOUNTED TIMBER SIGN POST (P1)	07-03-02
X	SN 9	GROUND MOUNTED TUBULAR STEEL SIGN POST (P2)	07-03-02
X	SN 10	GROUND MOUNTED SQUARE STEEL SIGN POST (P3)	07-03-02
X	SN 11	SLIPBASE GROUND MOUNTED TUBULAR STEEL SIGN POST (P-4)	07-03-02
X	SN 12A	GROUND MOUNTED SIGN INSTALLATION DETAILS	07-03-02
X	SN 12B	GROUND MOUNTED SIGN INSTALLATION DETAILS	07-03-02
X	SN 12C	GROUND MOUNTED SIGN INSTALLATION DETAILS	07-03-02
		Striping (ST)	
X	ST 1	OBJECT MARKERS "T" INTERSECTION & PAVEMENT TRANSITION GUIDANCE	07-03-02
X	ST 2	FREEWAY TURN AROUND MARKINGS	07-03-02
X	ST 3	TYPICAL PAVEMENT MARKINGS	07-03-02
X	ST 4	CROSSWALKS, PARKING AND INTERSECTION APPROACHES	07-03-02
X	ST 5	PAINTED MEDIAN & AUXILIARY LANE DETAILS	07-03-02
	ST 6	PASSING/CLIMBING LANES TRAFFIC CONTROL	07-03-02
	ST 7	PAVEMENT MARKINGS AND SIGNS AT RAILROAD CROSSING	07-03-02
	ST 8	PLOWABLE PAVEMENT MARKERS	07-03-02
	SW 1A	WELDED END GUARD UNIT	07-03-02
	SW 1B	PRECAST CONCRETE CATTLE GUARD	07-03-02
	SW 2	NOISE WALL PLACEMENT AREA	07-03-02
	SW 3A	PRECAST CONCRETE NOISE WALL 1 OF 2	07-03-02
	SW 3B	PRECAST CONCRETE NOISE WALL 2 OF 2	07-03-02
	SW 4A	PRECAST CONCRETE RETAINING/NOISE WALL 1 OF 2	07-03-02
	SW 4B	PRECAST CONCRETE RETAINING/NOISE WALL 2 OF 2	07-03-02
		Traffic Control (TC)	
X	TC 1A	CONSTRUCTION ZONE CHANNELIZATION DEVICES	07-03-02
X	TC 1B	CONSTRUCTION ZONE SIGNING	07-03-02
X	TC 2A	TRAFFIC CONTROL GENERAL	07-03-02
X	TC 2B	TRAFFIC CONTROL GENERAL	07-03-02
X	TC 3	TRAFFIC CONTROL PROJECT LIMIT SIGNING	07-03-02
X	TC 4	TRAFFIC CONTROL URBAN INTERSECTION WITH ROADWAYS UNDER 50 MPH	07-03-02
X	TC 5	TRAFFIC CONTROL URBAN INTERSECTION WITH ROADWAYS UNDER 50 MPH	07-03-02
X	TC 6	TRAFFIC CONTROL PEDESTRIAN ROUTING	07-03-02
X	TC 7	TRAFFIC CONTROL ROAD CLOSURE, DETOUR	07-03-02
X	TC 8	TRAFFIC CONTROL LANE CLOSURE	07-03-02
X	TC 9	TRAFFIC CONTROL MULTILANE CLOSURE	07-03-02
X	TC 10	TRAFFIC CONTROL EXPRESSWAY AND FREEWAY CROSSOVER/ TURN AROUND	07-03-02
X	TC 11	TRAFFIC CONTROL EXIT RAMP GORE	07-03-02
X	TC 12	TRAFFIC CONTROL ENTRANCE RAMP GORE	07-03-02
X	TC 13	TRAFFIC CONTROL SHOULDER-HAUL ROAD	07-03-02
X	TC 14	TRAFFIC CONTROL FLAGGING OPERATION	07-03-02
X	TC 15	TRAFFIC CONTROL 2 LANE / 2 WAY SEAL COAT WITH COVER MATERIAL	07-03-02
X	TC 16	TRAFFIC CONTROL PAVEMENT MARKING	07-03-02

☒ MARKED BOXES INDICATE DRAWINGS APPLICABLE TO THIS PROJECT

REVISIONS

NO.	DATE	APPR.	REMARKS

UTAH DEPARTMENT OF TRANSPORTATION
STANDARD DRAWINGS FOR ROAD AND BRIDGE CONSTRUCTION
SALT LAKE CITY, UTAH

RECOMMENDED FOR APPROVAL — JULY 03,2002 DATE

CHAIRMAN STANDARDS COMMITTEE APPROVED — JULY 03,2002 DATE

DEPUTY DIRECTOR

STANDARD DRAWING INDEX SHEET

STANDARD DRAWING TITLE

STD DWG
1-C

UDOT – STORM WATER POLLUTION PREVENTION PLAN

1. SITE DESCRIPTION

PROJECT LIMITS:

R.P. 12.78 TO R.P. 14.00

PROJECT DESCRIPTION:

NEW INTERCHANGE CONSTRUCTION

MAJOR SOIL DISTURBING ACTIVITIES:

(CHECK THE FOLLOWING AS THEY APPLY)

- [X] CLEAR AND GRUBBING
- [X] EXCAVATION
- [X] GRADING
- [X] PLACEMENT OF FILL
- [X] CUT AND FILL
- [ ] OTHERS

TOTAL PROJECT AREA: 104.81 ACRES

TOTAL AREA TO BE DISTURBED: 41.63 ACRES

WEIGHTED RUNOFF COEFFICIENT (AFTER CONSTRUCTION): C = 0.35

EXISTING CONDITION OF SOIL & VEGETATIVE COVER AND % OF VEGETATION COVER:

10% TREES, 20% SHRUBS, 10% GRASS, & 60% BARE GROUND.

NAME OF RECEIVING WATERS:

GRAPE VINE WASH, VIRGIN RIVER

2. CONTROLS:

2a. EROSION AND SEDIMENT

• STABILIZATION PRACTICES:	STD. SPEC. NO.
[X] TEMPORARY OR PERMANENT SEEDING	02922
[ ] TURF SODDING	02922
[X] PLANTING	02931, 02932
[X] MULCHING	02911
[X] EROSION CONTROL BLANKETS	02376
[ ] VEGETATIVE BUFFER STRIPS	
[ ] PRESERVATION OF TREES	
[ ] ROUGHENED SURFACE GRADING PRACTICES	02912

• STRUCTURAL PRACTICES:	STD.DWG. NO.	STD.SPEC. NO.	DET.SHT. NO.
[X] SILT FENCES	EN 2	01571	
[ ] STRAW OR HAY BALE BARRIERS	EN 1	01571	
[ ] TEMPORARY BERMS	EN 3	01571	
[ ] TEMPORARY SLOPE DRAINS	EN 3	01571	
[ ] BRUSH BARRIERS			
[ ] DRAINAGE SWALES/DITCHES		02318	
[ ] CHANNEL LINERS		02376	
[X] RIPRAP		02372	DT5.DT6
[X] CHECK DAMS	EN 1	01571	
[ ] SEDIMENT TRAPS	EN 5	01571	
[ ] TEMP. OR PERMANENT SEDIMENT BASINS		01571	
[ ] PIPE INLET PROTECTION			
[ ] PIPE OUTLET PROTECTION		02373	
[ ] DROP-INLET BARRIERS	EN 4	01571	
[ ] CURB INLET BARRIERS	EN 5	01571	
[ ] CURBS AND GUTTERS			
[ ] OFF-SITE VEHICLE TRACKING CONTROL			

• WILL CONSTRUCTION OR PLACEMENT OF EROSION CONTROL STRUCTURES IMPACT REGULATED WETLANDS ?
YES [ ] NO [X]

THE PLACEMENT OF EROSION CONTROL STRUCTURES ARE INCLUDED IN THE TOTAL PROJECT WETLAND IMPACTS AND HAVE BEEN PERMITTED THROUGH THE army CORPS OF ENGINEERS.

2b. STORM WATER MANAGEMENT:

HANDLE STORM WATER RUNOFF DURING AND AFTER CONSTRUCTION BY DITCHES, CHANNELS, AND DROP INLETS INTO CROSS CULVERTS OR STORM DRAIN AS DESIGNED. INCLUDE MITIGATION MEASURES WHERE APPLICABLE.

2c. OTHER CONTROLS:

- **WASTE MATERIALS AND DISPOSAL:**
  COMPLY WITH SECTION 00725 ARTICLE "FINAL CLEANUP" SECTION 01455 ARTICLE "FINISHING LOCAL MATERIAL SOURCE SITES", AND SECTION 00820
- **OFFSITE VEHICLE TRACKING AND DUST CONTROL:**
  COMPLY WITH SECTION 01572
- **HAZARDOUS WASTE (INCLUDING SPILL REPORTING):**
  COMPLY WITH SECTION 01355 AND SECTION 00820
- **SANITARY WASTE:**
  COMPLY WITH SECTION 00820

2d. APPROVED STATE OR LOCAL PLANS:

THIS STORM WATER POLLUTION PREVENTION PLAN HAS BEEN DEVELOPED IN ACCORDANCE WITH THE PROVISIONS OF THE MEMORANDUM OF UNDERSTANDING (MOU) BETWEEN THE UDOT AND THE UTAH DEPARTMENT OF ENVIRONMENTAL QUALITY AND THE BEST MANAGEMENT PRACTICE (BMP) PLANS AND HAS BEEN APPROVED BY THE UTAH DIVISION OF WATER QUALITY.

3. MAINTENANCE:

COMPLY WITH SECTION 00725 ARTICLE "FINAL CLEANUP" SECTION 00727 ARTICLE "MAINTAINING THE WORK DURING CONSTRUCTION" AND SECTION 01571 ARTICLE "INSTALLATION"

ACCOMPLISH NECESSARY MAINTENANCE OF CONTROL MEASURES TO PROVIDE CONTINUED EFFECTIVENESS. SCHEDULE AND ACCOMPLISH MAINTENANCE EFFORTS AFTER EACH STORM EVENT AND PRIOR TO ANTICIPATED STORM EVENTS.

4. INSPECTION:

COMPLY WITH SECTION 00727 ARTICLE "INSPECTION OF WORK". INSPECT BY QUALIFIED PERSONNEL. DISTURBED AREAS, STORAGE AREAS, EROSION/SEDIMENT CONTROL MEASURES AND CONSTRUCTION ACCESS LOCATIONS:

- AT LEAST ONCE EVERY FOURTEEN DAYS FOR SITES NOT FINALLY STABILIZED.
- PRIOR TO ANTICIPATED STORM EVENTS THAT COULD RESULT IN SUBSTANTIAL RUNOFF.
- WITHIN 24 HOURS AFTER A STORM THAT RESULTS IN 0.5 INCH OF RUNOFF OR GREATER.
- AT LEAST ONCE A MONTH, WHEN RUNOFF IS UNLIKELY OR WHERE SITES HAVE BEEN STABILIZED.

PREPARE A REPORT FOR EACH INSPECTION. INCLUDE THE SCOPE OF THE INSPECTION, DATE, NAMES OF INSPECTORS, MAJOR OBSERVATIONS, FAILED CONTROLS AND ACTIONS TAKEN.

RETAIN COPIES OF INSPECTION REPORTS. THE SWPPP, THE NOI AND OTHER RECORDS FOR 3 YEARS FOLLOWING.

5. NON-STORM WATER DISCHARGES:

COMPLY WITH APPROPRIATE SECTIONS.

6. KEEPING PLANS CURRENT:

AMEND THIS STORM WATER POLLUTION PREVENTION PLAN WHENEVER:

1. THERE IS A CHANGE IN DESIGN, CONSTRUCTION, OPERATION OR MAINTENANCE THAT HAS A SUBSTANTIAL EFFECT ON THE DISCHARGE OF POLLUTANTS TO THE WATERS OF THE STATE.
2. INSPECTIONS OR INVESTIGATIONS BY OFFICIALS INDICATE THAT THE PLAN IS INEFFECTIVE IN ELIMINATING, MINIMIZING OR CONTROLLING THE DISCHARGE OF POLLUTANTS ASSOCIATED WITH CONSTRUCTION ACTIVITY.
3. THERE IS A NEW CONTRACTOR OR SUBCONTRACTOR THAT IMPLEMENTS A MEASURE OF THE STORM WATER POLLUTION PREVENTION PLAN.

GENERAL NOTES:

1. IMPLEMENT STORM WATER POLLUTION PREVENTION PLAN IN ACCORDANCE WITH UDOT'S CURRENT STANDARD SPECIFICATIONS FOR ROAD AND BRIDGE CONSTRUCTION, WITH SPECIAL EMPHASIS ON SECTIONS 01355, 01571, 01574 AND STANDARD DRAWING SHEETS EN 1 – EN 5
2. COMPLY WITH THE REQUIREMENTS OF THIS STORM WATER POLLUTION PREVENTION PLAN FOR ANY ADDITIONAL CONSTRUCTION ACTIVITIES PERFORMED WITHIN THE PROJECT LIMITS NOT COVERED UNDER THE CONTRACT.

NO.	DATE	REVISIONS	BY
1	05/09/02	CORRECTED SPELLING NOTES 2A,4 AND 6	FRW
2	06/15/02	REVISED TO U.S. STANDARD UNITS (INCH-POUND UNITS)	FRW

DESIGN JRB 10/03 CHECK SJO 10/03 REVIEW
DRAWN JRB 10/03 CHECK SJO 10/03 DATE
QUANT. JRB 10/03 CHECK SJO 10/03 BY

UTAH DEPARTMENT OF TRANSPORTATION
REGION 4 — RICHFIELD, UTAH
ROADWAY DESIGN

WASHINGTON INTERCHANGE @ RP 13
STORM WATER POLLUTION PREVENTION PLAN

PROJECT NUMBER *SP-15-1(20)13

WASHINGTON COUNTY

SHEET NO. 1-D

APPROVAL RECOMM. DATE PROJECT DESIGN ENGINEER
APPROVED DATE PRECONSTRUCTION ENGINEER

ORIGINAL SUBMISSION FOR AUTHORIZATION

DESIGN MAPS REV. BY CORR. BY AFFECTED PANELS REQUEST BY REMARKS

DGN File:N:\Projects\2520_02\Sheet_Files\Roadway_Design\Stormwater_Plans\S_Standard.dgn
24-NOV-2003

TYPICAL SECTION 1

I-15 SOUTHBOUND EXISTING
STA 284+50.00 TO STA 350+45.24
DESIGN SPEED 75 MPH
CLEAR ZONE = 30'

SOUTH BOUND TYPICAL SECTION TRANSITIONS

ALIGNMENT	FROM STATION & TYPICAL SECTION	TO STATION AND TYPICAL SECTION
SB I-15	STA 285+00.00 TYPICAL SECTION 1	STA 288+00.00 TYPICAL SECTION 3
"A" LINE	STA 10+00.00 TYPICAL SECTION 3	STA 12+69.53 TYPICAL SECTION 4
"A" LINE	STA 17+85.00 TYPICAL SECTION 6	STA 20+85.00 TYPICAL SECTION 7
"A" LINE	STA 30+50.00 TYPICAL SECTION 7	STA 32+00.00 TYPICAL SECTION 6
"A" LINE	STA 41+60.98 TYPICAL SECTION 4	STA 45+32.36 TYPICAL SECTION 1

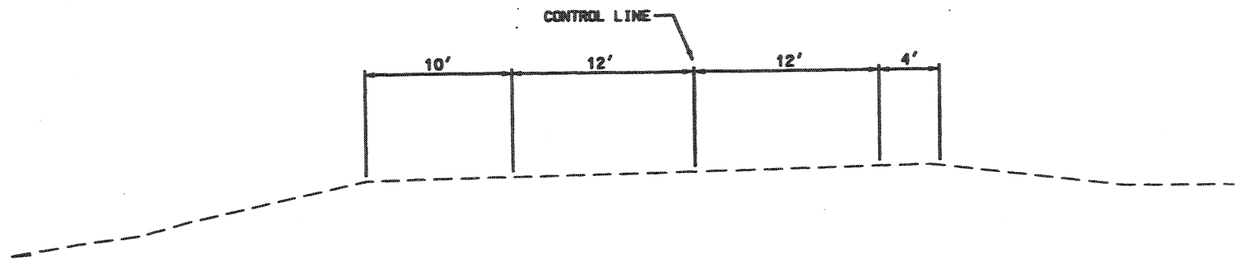

TYPICAL SECTION 2

I-15 NORTHBOUND EXISTING
STA 285+01.64 TO STA 351+80.54
DESIGN SPEED 75 MPH
CLEAR ZONE = 30'

NORTH BOUND TYPICAL SECTION TRANSITIONS

ALIGNMENT	FROM STATION & TYPICAL SECTION	TO STATION AND TYPICAL SECTION
"B" LINE	STA 10+00.00 TYPICAL SECTION 2	STA 13+64.94 TYPICAL SECTION 8
"B" LINE	STA 18+00.00 TYPICAL SECTION 10	STA 19+50.00 TYPICAL SECTION 11
"B" LINE	STA 34+19.47 TYPICAL SECTION 8	STA 39+55.86 TYPICAL SECTION 12
NB I-15	STA 347+50.00 TYPICAL SECTION 12	STA 351+00.00 TYPICAL SECTION 2

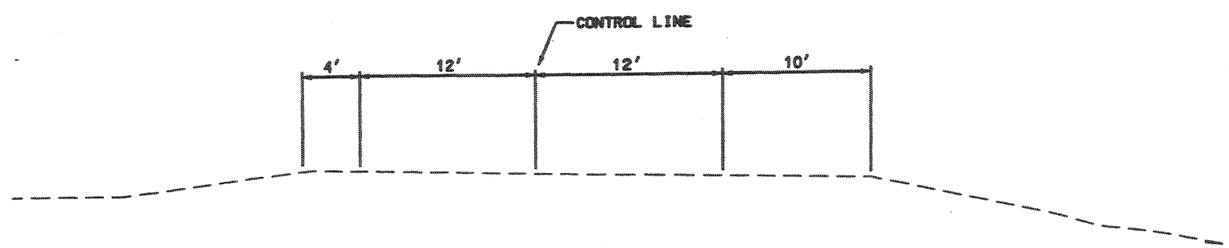

UTAH DEPARTMENT OF TRANSPORTATION
REGION 4 — RICHFIELD, UTAH
ROADWAY DESIGN

DESIGN SJO 5/02 CHECK CGW 7/03 REVIEW
DRAWN SJO 5/02 CHECK CGW 7/03 DATE
QUANT. SJO 5/02 CHECK CGW 7/03 BY

APPROVAL RECOMM. — PROJECT DESIGN ENGINEER — DATE
APPROVED FOR USE BY UDOT — PRECONSTRUCTION ENGINEER — DATE

NO. DATE | DESIGN REV. BY | MAPS CORR. BY | PARCELS APPROVED | REQUEST BY | REMARKS
ORIGINAL SUBMISSION FOR AUTHORIZATION
REVISIONS

WASHINGTON INTERCHANGE @ RP 13
TYPICAL SECTION SHEET
PROJECT NUMBER #SP-15-1(120)13
WASHINGTON COUNTY
SHEET NO. TS-1

4-NOV-2003 DGN Files\NVP-projects\2628.82\Sheet_Files\Roadway_Design\ts-1.dgn

TYPICAL SECTION 3

I-15 SOUTHBOUND
STA 288+00.00 TO STA 301+90.56
DESIGN SPEED 75 MPH
CLEAR ZONE = 30'

TYPICAL SECTION TRANSITIONS	BEGIN TAPER	END TAPER
TYPICAL SECTION 1 TO TYPICAL SECTION 3	STA 285+00.00	STA 288+00.00
TYPICAL SECTION 3 TO TYPICAL SECTION 4	STA 301+90.56 (10+00 "A" Line)	STA 12+69.53 "A" LINE

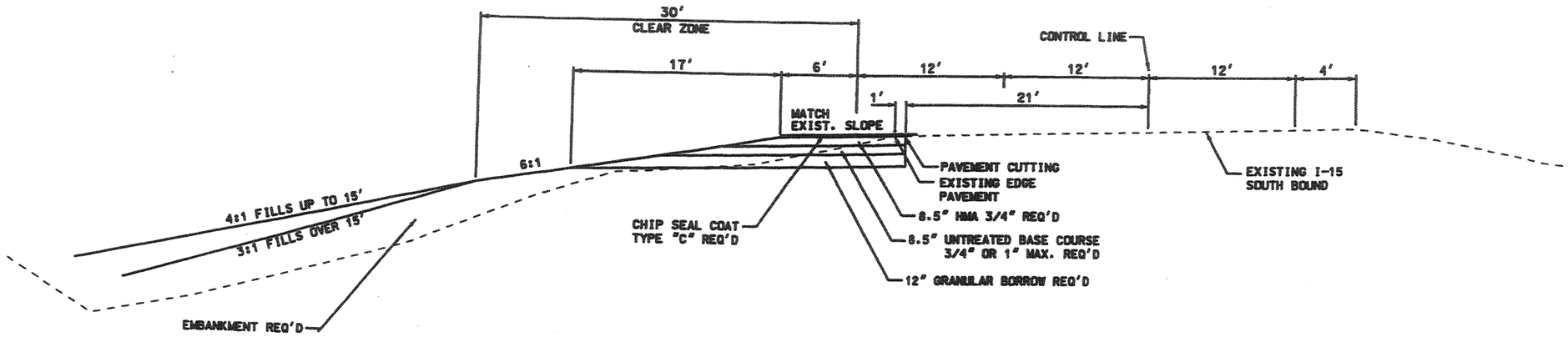

FILL SECTIONS

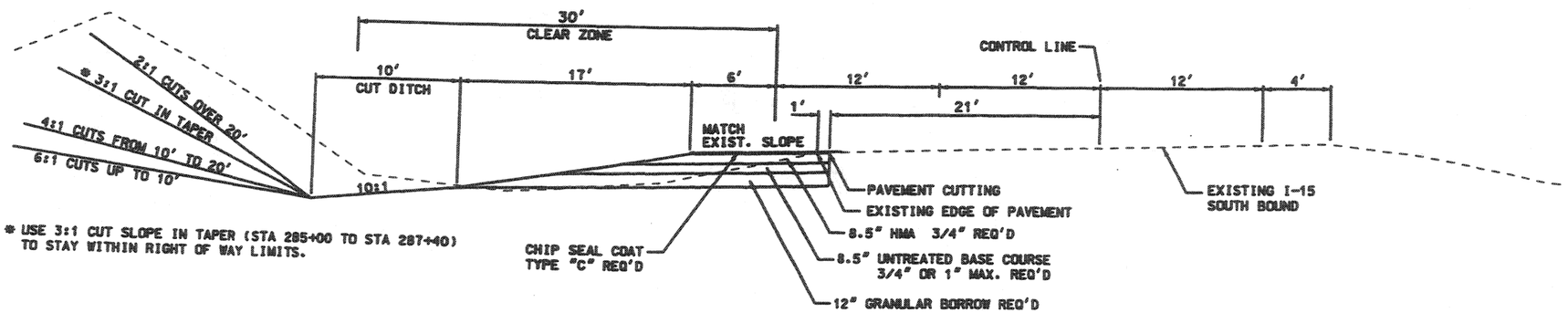

* USE 3:1 CUT SLOPE IN TAPER (STA 285+00 TO STA 287+40) TO STAY WITHIN RIGHT OF WAY LIMITS.

CUT SECTIONS

NOTES:

1. SEE PROFILE SHEETS FOR SUPERELEVATION
2. SEE SHEET DT-1 FOR CUT AND FILL SLOPE DETAILS
3. CHIP SEAL COAT SHALL OVERLAP EXISTING PAVEMENT 1 FT MIN.
4. PLACE TOPSOIL, SEED, AND MULCH ON ALL BARE SOIL AREAS (EXCEPT UNTREATED BASE LAYER).

DGN: File:\NAP-Projects\2528.82\Sheet_Files\Roadway_Design\TS-2.dgn
24-NOV-2003

REVISIONS

NO.	DATE	DESIGN REVISION	MAPS, CORR, RT APPLICATION	PARCELS REQUEST BY	REMARKS
					ORIGINAL SUBMISSION FOR AUTHORIZATION

UTAH DEPARTMENT OF TRANSPORTATION
REGION 4 — RICHFIELD, UTAH
ROADWAY DESIGN

	DESIGN	DRAWN	QUANT.
CHECK	SJO 5/02	SJO 5/02	SJO 5/02
CHECK	CGM 7/03	CGM 7/03	CGM 7/03
CHECK	CGM 7/03	CGM 7/03	CGM 7/03

APPROVAL RECOMM. — DATE — PROJECT DESIGN ENGINEER
APPROVED BY UDOT — DATE — PRECONSTRUCTION ENGINEER

WASHINGTON INTERCHANGE @ RP 13
TYPICAL SECTION SHEET
PROJECT NUMBER #SP-15-1(20)113
WASHINGTON COUNTY
SHEET NO. TS-2

TYPICAL SECTION 4

"A" LINE (SOUTHBOUND RAMPS)
STA 12+69.53 TO STA 13+29.00 &
STA 41+03.00 TO STA 41+60.98
DESIGN SPEED 75 MPH
CLEAR ZONE - 30'

TYPICAL SECTION TRANSITIONS	BEGIN TAPER	END TAPER
TYPICAL SECTION 3 TO TYPICAL SECTION 4	STA 10+00.00	STA 12+69.53
TYPICAL SECTION 4 TO TYPICAL SECTION 1	STA 41+60.98	STA 45+32.36

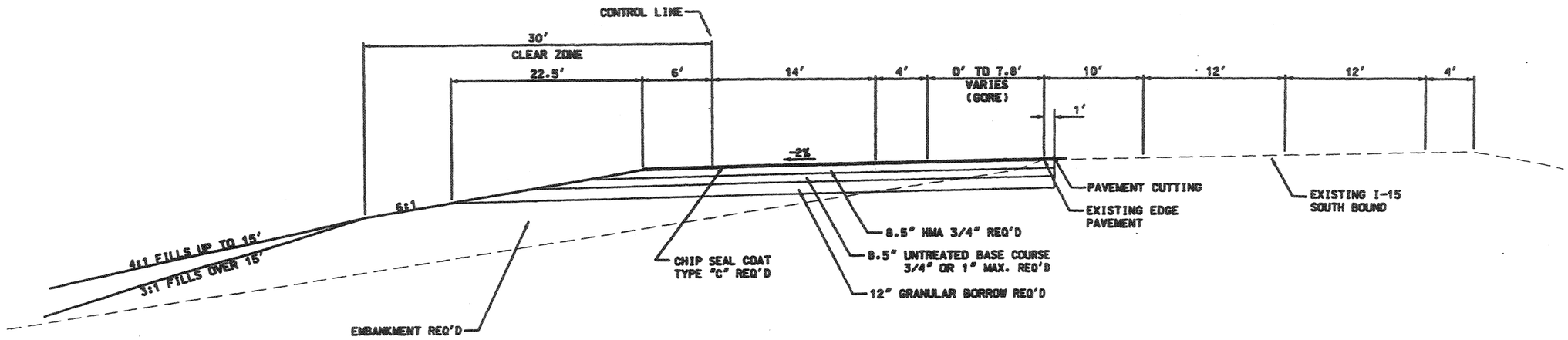

FILL SECTIONS

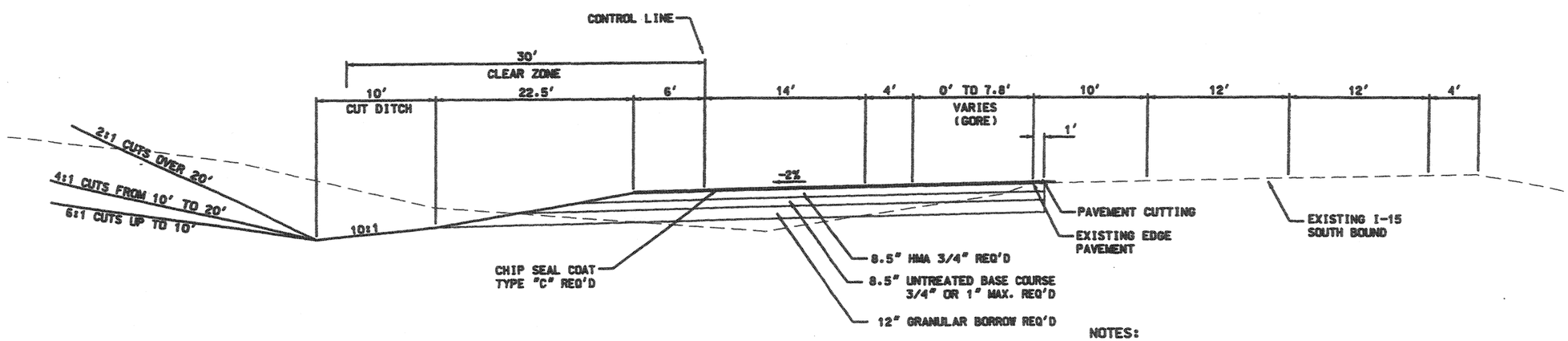

CUT SECTIONS

NOTES:

1. SEE PROFILE SHEETS FOR SUPERELEVATION
2. SEE SHEET DT-1 FOR CUT AND FILL SLOPE DETAILS
3. CHIP SEAL COAT SHALL OVERLAP EXISTING PAVEMENT 1 FT MIN.
4. PLACE TOPSOIL, SEED, AND MULCH ON ALL BARE SOIL AREAS (EXCEPT UNTREATED BASE LAYER).

REVISIONS

NO.	DATE	REMARKS
		ORIGINAL SUBMISSION FOR AUTHORIZATION
	DATE	

UTAH DEPARTMENT OF TRANSPORTATION
REGION 4 — RICHFIELD, UTAH
ROADWAY DESIGN

APPROVAL RECOMMENDED: DATE — PROJECT DESIGN ENGINEER
APPROVED FOR USE BY UDOT: DATE — PRECONSTRUCTION ENGINEER

DESIGN SJO 5/02	CHECK CGW 7/03	REVIEW	
DRAWN SJO 5/02	CHECK CGW 7/03	DATE	
QUANT. SJO 5/02	CHECK CGW 7/03	BY	

WASHINGTON INTERCHANGE @ RP 13
TYPICAL SECTION SHEET
PROJECT NUMBER #SP-15-1(20)13
WASHINGTON COUNTY
SHEET NO. TS-3

DGN: F:\as-built\Projects\2922.60\Sheet_Files\Roadway_Design\ts-3.dgn
DW: 2003

TYPICAL SECTION 5

"A" LINE (SOUTHBOUND RAMPS)
STA 13+29.00 TO STA 14+75.00 &
STA 39+62.00 TO STA 41+03.00
DESIGN SPEED 75 MPH
CLEAR ZONE - 30'

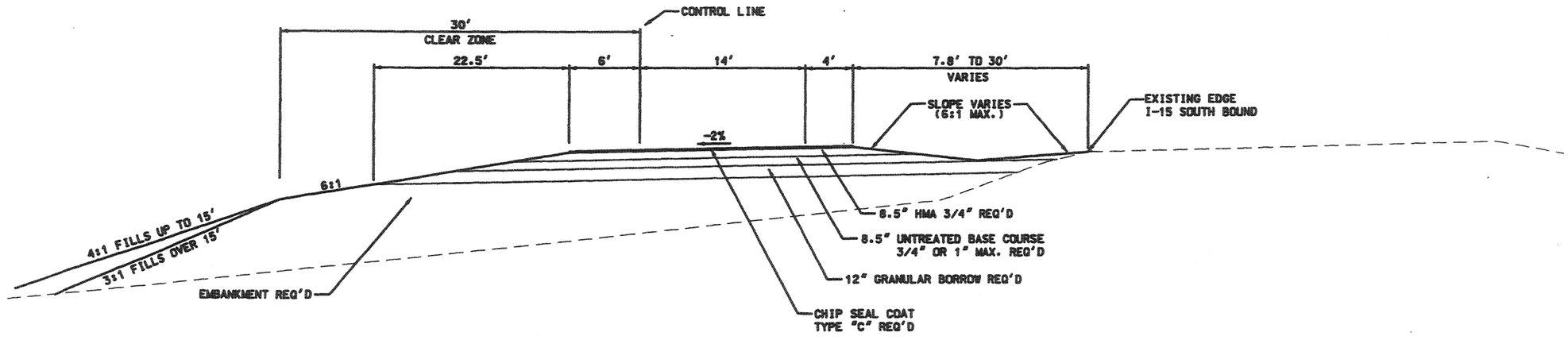

FILL SECTIONS

CUT SECTIONS
STA 13+29.00 TO STA 14+75.00 - LT & RT
STA 39+62.00 TO STA 41+03.00 - RT

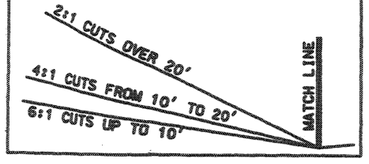

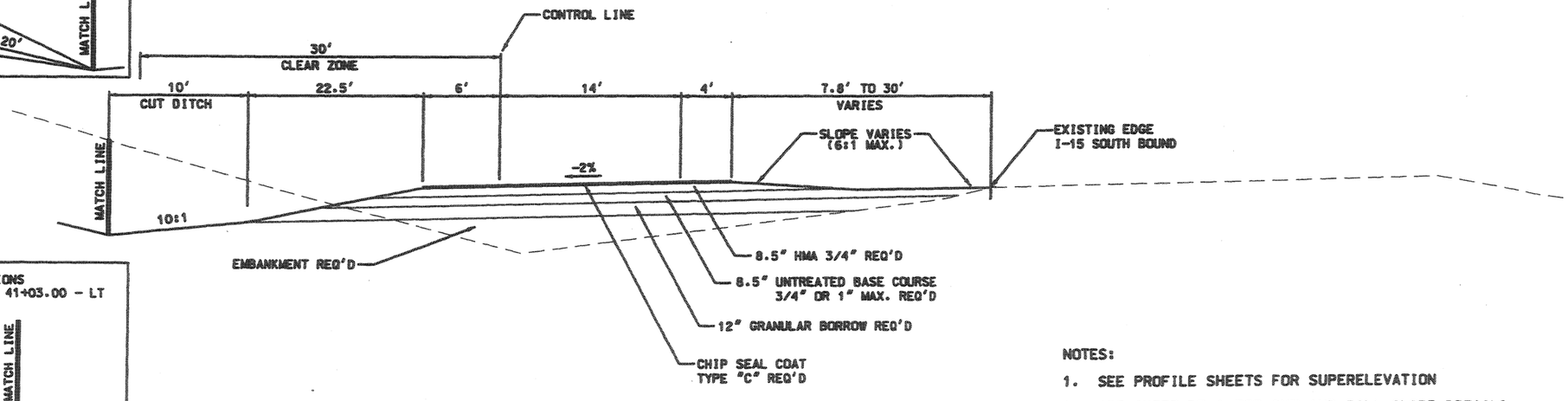

CUT SECTIONS
STA 39+62.00 TO STA 41+03.00 - LT

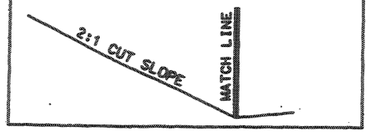

CUT SECTIONS

NOTES:

1. SEE PROFILE SHEETS FOR SUPERELEVATION
2. SEE SHEET DT-1 FOR CUT AND FILL SLOPE DETAILS
3. PLACE TOPSOIL, SEED, AND MULCH ON ALL BARE SOIL AREAS (EXCEPT UNTREATED BASE LAYER).

NO.	DATE	DESIGN REV. BY	MAPS CORR. BY	PARCELS AFFECTED	REQUEST BY	REMARKS
	DATE	ORIGINAL SUBMISSION FOR AUTHORIZATION				

REVISIONS

UTAH DEPARTMENT OF TRANSPORTATION
REGION 4 — RICHFIELD, UTAH
ROADWAY DESIGN

DESIGN SJO 5/02	CHECK CGW 7/03	REVIEW	
DRAWN SJO 5/02	CHECK CGW 7/03	DATE	
QUANT. SJO 5/02	CHECK CGW 7/03	BY	

APPROVAL RECOMM. — DATE — PROJECT DESIGN ENGINEER
APPROVED FOR USE BY UDOT — DATE — PRECONSTRUCTION ENGINEER

WASHINGTON INTERCHANGE @ RP 13

TYPICAL SECTION SHEET

PROJECT NUMBER #SP-15-1(20)13

WASHINGTON COUNTY

SHEET NO. TS-4

D:\DGN Files\NProjects\2928.02\Sheet Files\Roadway Design\ts-4.dgn
2:1-HDY 2003

TYPICAL SECTION 6

"A" LINE (SOUTHBOUND RAMPS)
STA 14+75.00 TO STA 17+85.00 &
STA 32+00.00 TO STA 39+62.00
DESIGN SPEED 45 MPH
CLEAR ZONE - 20'

TYPICAL SECTION TRANSITIONS	BEGIN TAPER	END TAPER
TYPICAL SECTION 6 TO TYPICAL SECTION 7	STA 17+85.00	STA 20+85.00
TYPICAL SECTION 7 TO TYPICAL SECTION 6	STA 30+50.00	STA 32+00.00

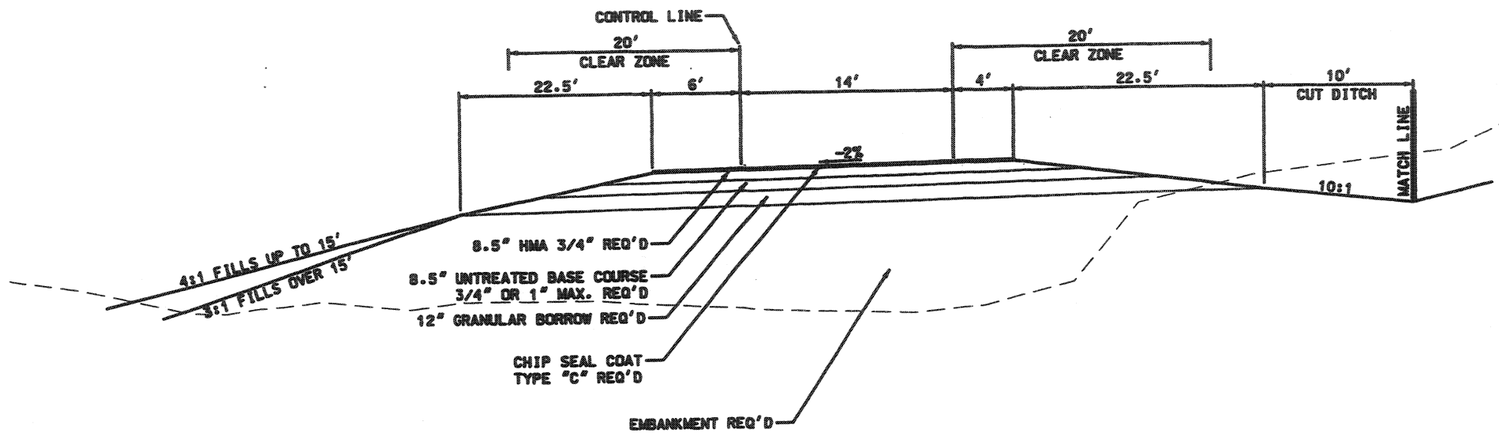

CUT SECTIONS
STA 32+00.00 TO STA 39+62.00 - LT

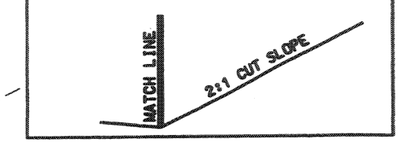

CUT SECTIONS
STA 14+75.00 TO STA 17+85.00 - LT & RT
STA 32+00.00 TO STA 39+62.00 - RT

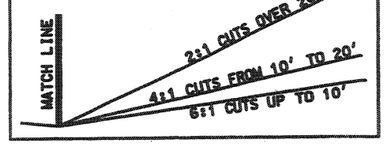

TYPICAL SECTION 7

"A" LINE (SOUTHBOUND RAMPS)
STA 20+85.00 TO STA 26+46.15 &
STA 27+30.15 TO STA 30+50.00
DESIGN SPEED 45 MPH
CLEAR ZONE - 20'

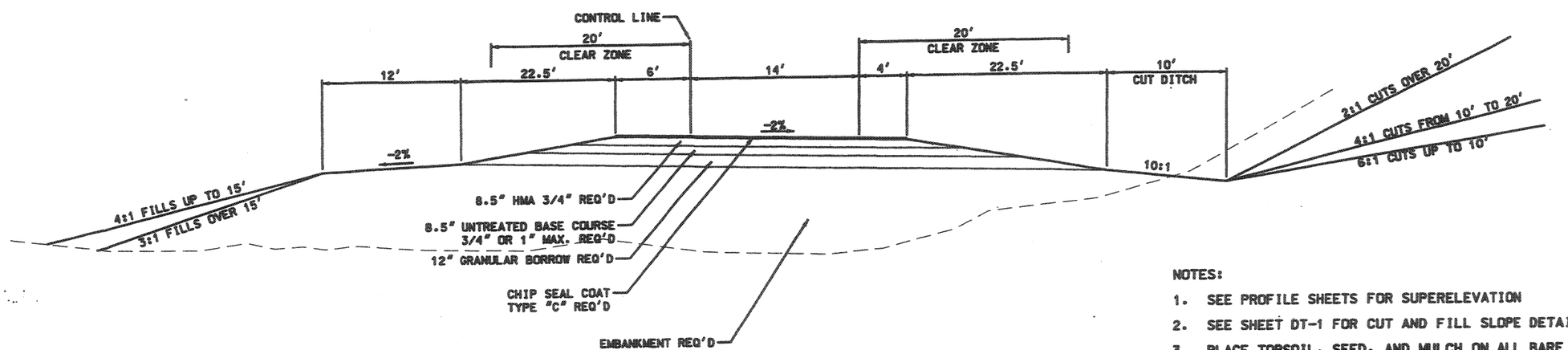

NOTES:

1. SEE PROFILE SHEETS FOR SUPERELEVATION
2. SEE SHEET DT-1 FOR CUT AND FILL SLOPE DETAILS
3. PLACE TOPSOIL, SEED, AND MULCH ON ALL BARE SOIL AREAS (EXCEPT UNTREATED BASE LAYER).

REVISIONS

NO.	DATE	DESIGN REV. BY	MAPS CORR. BY	PARCELS AFFECTED	REQUEST BY	REMARKS
						ORIGINAL SUBMISSION FOR AUTHORIZATION
	DATE					

UTAH DEPARTMENT OF TRANSPORTATION
REGION 4 — RICHFIELD, UTAH
ROADWAY DESIGN

DESIGN SJO 5/02	DRAWN SJO 5/02	QUANT. SJO 5/02	REVIEW
CHECK CGW 7/03	CHECK CGW 7/03	CHECK CGW 7/03	DATE / BY

APPROVAL RECOMM. DATE — PROJECT DESIGN ENGINEER
APPROVED FOR USE BY UDOT DATE — PRECONSTRUCTION ENGINEER

WASHINGTON INTERCHANGE @ RP 13
TYPICAL SECTION SHEET
PROJECT NUMBER #SP-15-1(20)13
WASHINGTON COUNTY
SHEET NO. TS-5

DGN File:N:\Projects\2526.82\Sheet_Files\Roadway_Design\Vsa-5.dgn
©HDV-2003

TYPICAL SECTION 8

"B" LINE (NORTHBOUND RAMPS)
STA 13+64.94 TO STA 14+48.00 &
STA 34+30.00 TO STA 35+19.47
DESIGN SPEED 75 MPH
CLEAR ZONE - 30'

TYPICAL SECTION TRANSITIONS	BEGIN TAPER	END TAPER
TYPICAL SECTION 2 TO TYPICAL SECTION 8	STA 10+00.00	STA 13+64.94
TYPICAL SECTION 8 TO TYPICAL SECTION 12	STA 35+19.47	STA 39+55.86 (I-15) 333+67.24

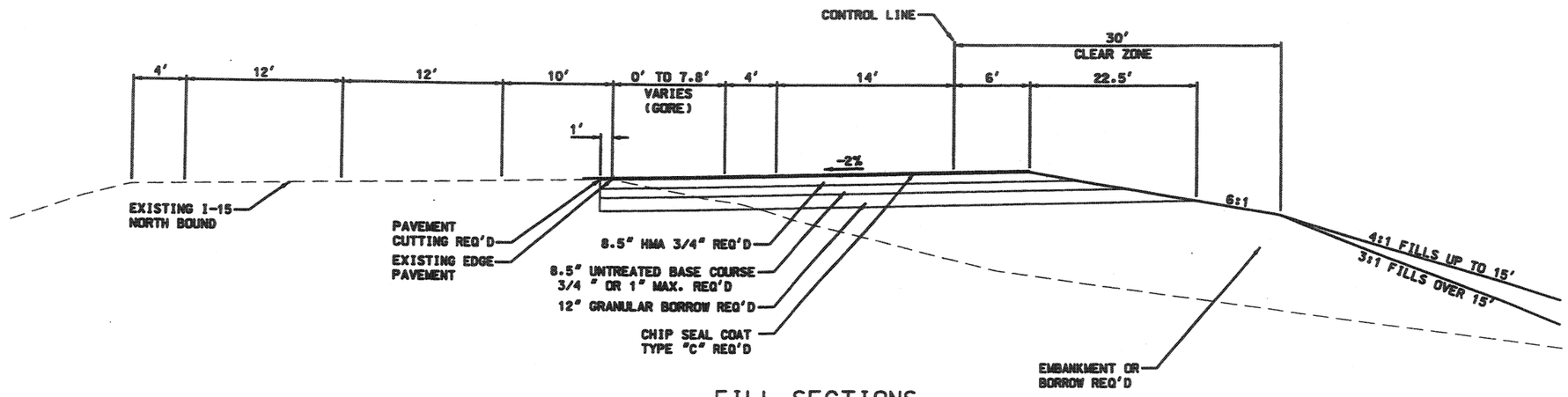

FILL SECTIONS

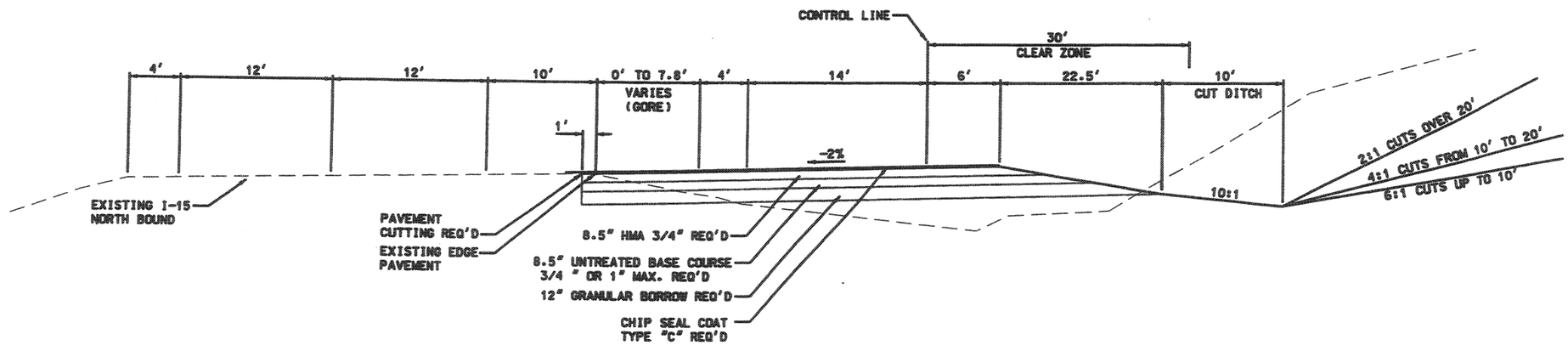

CUT SECTIONS

NOTES:

1. SEE PROFILE SHEETS FOR SUPERELEVATION
2. SEE SHEET DT-1 FOR CUT AND FILL SLOPE DETAILS
3. CHIP SEAL COAT SHALL OVERLAP EXISTING PAVEMENT 1 FT MIN.
4. PLACE TOPSOIL, SEED, AND MULCH ON ALL BARE SOIL AREAS (EXCEPT UNTREATED BASE LAYER).

DGN File:N:\Projects\2626.02\Sheet_Files\Roadway_Design\ts-6.dgn
24-NOV-2003

UTAH DEPARTMENT OF TRANSPORTATION
REGION 4 --- RICHFIELD, UTAH
ROADWAY DESIGN

WASHINGTON INTERCHANGE @ RP 13
TYPICAL SECTION SHEET

PROJECT NUMBER #SP-15-1(20)13

WASHINGTON COUNTY

SHEET NO. TS-6

NO.	DATE	REVISIONS	BY
		ORIGINAL SUBMISSION FOR AUTHORIZATION	

	DESIGN	DRAWN	QUANT.
CHECK	CGW	CGW	CGW
DATE	5/02	5/02	5/02
BY	SJO	SJO	SJO

REVIEW
DATE 7/03
BY 7/03

APPROVED AS A RECORD REQUEST
APPROVED AS CORRECTED
APPROVED FOR USE BY UDOT
DATE
PROJECT DESIGN ENGINEER
DATE
PRECONSTRUCTION ENGINEER
DATE
REMARKS

TYPICAL SECTION 9

"B" LINE (NORTHBOUND RAMPS)
STA 14+48.00 TO STA 16+46.00 &
STA 34+00.00 TO STA 34+29.00
DESIGN SPEED 75 MPH
CLEAR ZONE - 30'

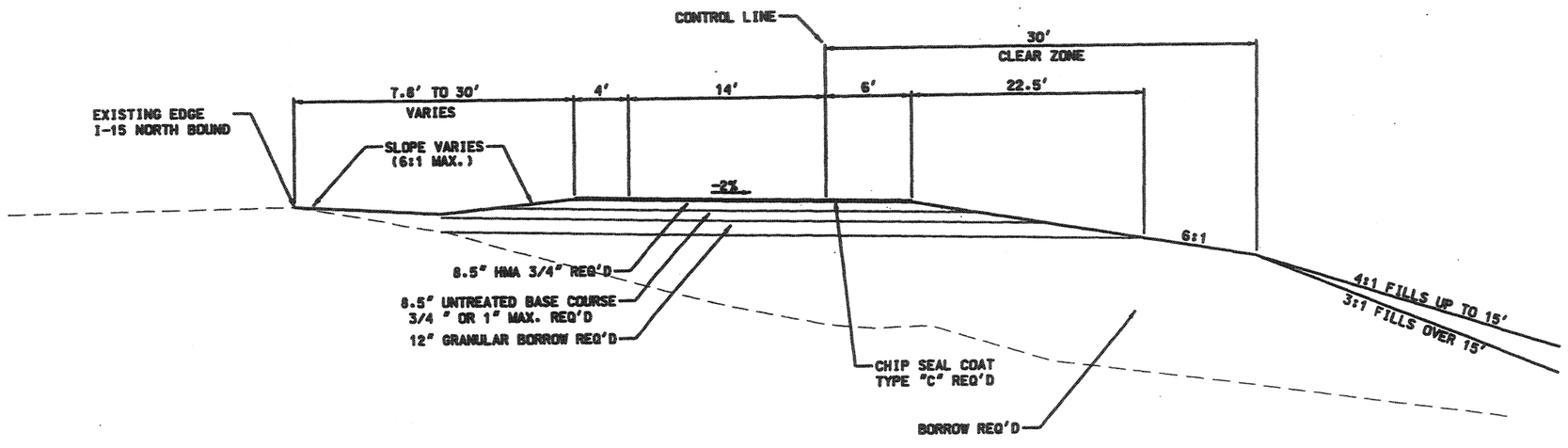

FILL SECTIONS

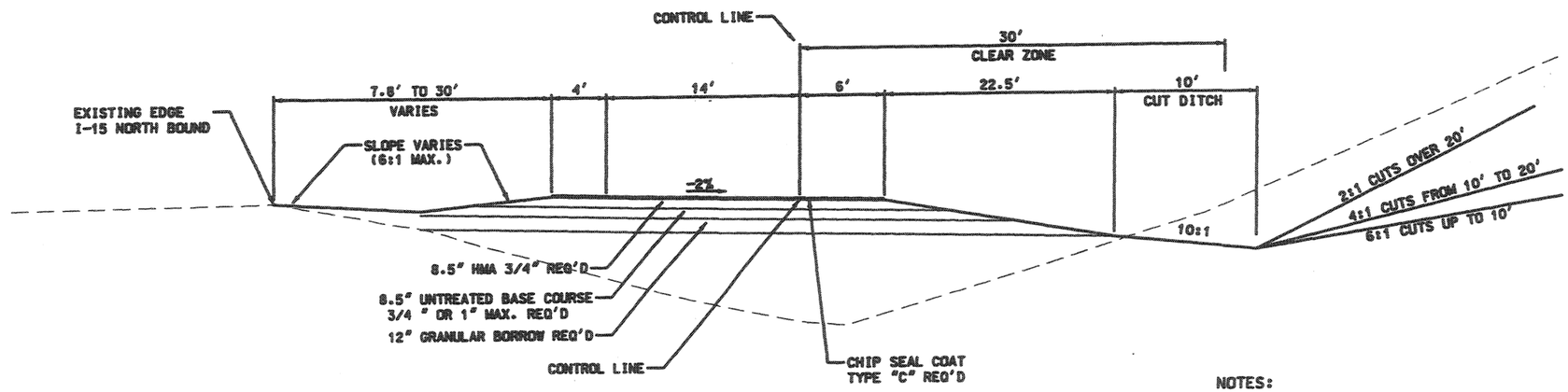

CUT SECTIONS

NOTES:

1. SEE PROFILE SHEETS FOR SUPERELEVATION
2. SEE SHEET DT-1 FOR CUT AND FILL SLOPE DETAILS
3. PLACE TOPSOIL, SEED, AND MULCH ON ALL BARE SOIL AREAS (EXCEPT UNTREATED BASE LAYER).

DGN File:INP-projects\2828.#2\Sheet Files\Roadway Design\ts-7.dgn

UTAH DEPARTMENT OF TRANSPORTATION
REGION 4 — RICHFIELD, UTAH
ROADWAY DESIGN

	DESIGN	CHECK	REVIEW
	SJO 5/02	CGW 7/03	
DRAWN	SJO 5/02	CGW 7/03	DATE
QUANT.	SJO 5/02	CGW 7/03	BY

APPROVAL RECOMM. — PROJECT DESIGN ENGINEER — DATE
APPROVED FOR LET DT. — RECONSTRUCTION ENGINEER — DATE

WASHINGTON INTERCHANGE @ RP 13
TYPICAL SECTION SHEET
PROJECT NUMBER #SP-15-1(120)13
WASHINGTON COUNTY
SHEET NO. TS-7

NO.	DATE	DESIGN REV. BY	CORR. BY	MAPS APPROVED	PARCELS APPROVED	REQUEST BY	REMARKS
							ORIGINAL SUBMISSION FOR AUTHORIZATION

REVISIONS

TYPICAL SECTION 10

"B" LINE (NORTHBOUND RAMPS)
STA 16+46.00 TO STA 18+00.00 &
DESIGN SPEED 45 MPH
CLEAR ZONE - 20'

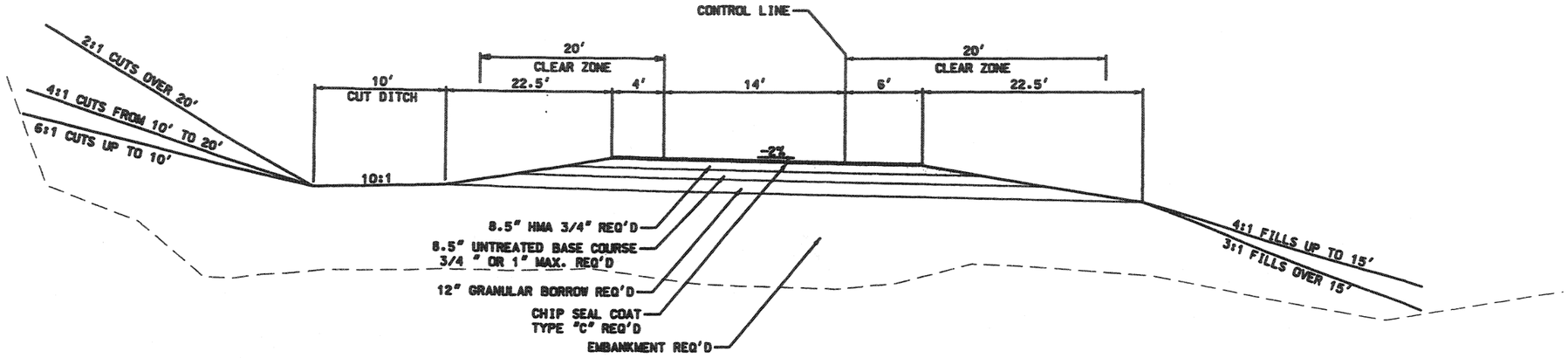

TYPICAL SECTION 11

"B" LINE (NORTHBOUND RAMPS)
STA 19+50.00 TO STA 24+85.05
STA 25+63.05 TO STA 31+50.00
DESIGN SPEED 45 MPH
CLEAR ZONE - 20'

TYPICAL SECTION TRANSITIONS	BEGIN TAPER	END TAPER
TYPICAL SECTION 10 TO TYPICAL SECTION 11	STA 18+00.00	STA 19+50.00
TYPICAL SECTION 11 TO TYPICAL SECTION 9	STA 31+50.00	STA 34+00.00

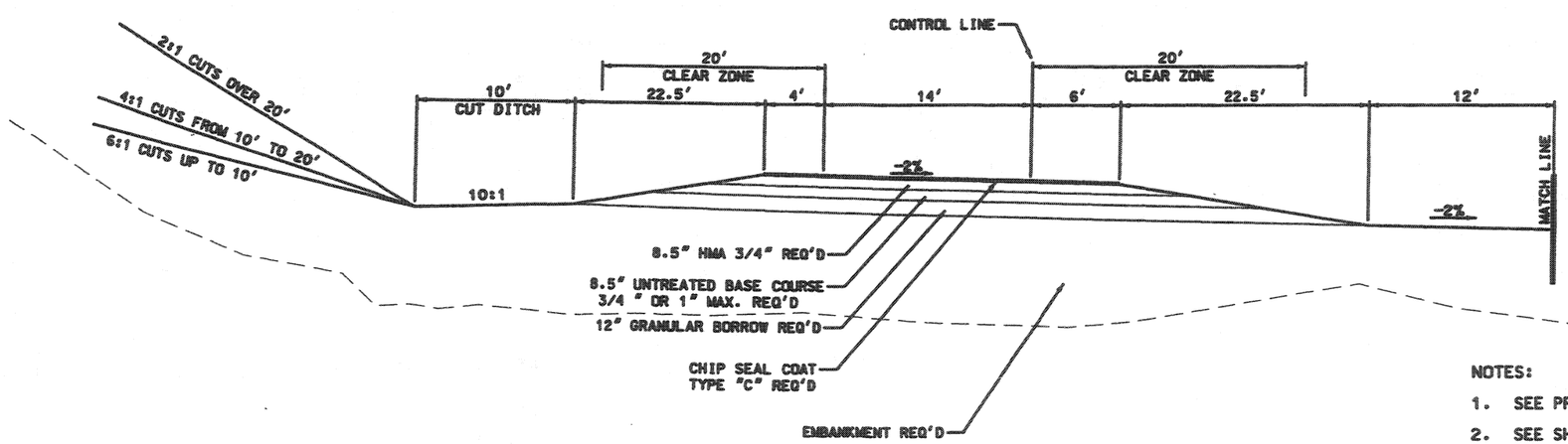

FILL SECTIONS
RIGHT SIDE-STA 25+63.05 TO STA 30+00.00

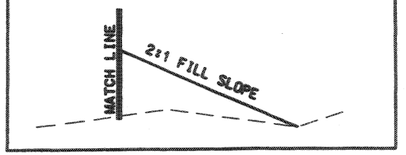

FILL SECTIONS
STA 19+50.00 TO STA 24+85.05 AND
STA 30+00.00 TO STA 31+50.00

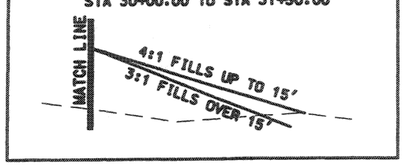

NOTES:

1. SEE PROFILE SHEETS FOR SUPERELEVATION
2. SEE SHEET DT-1 FOR CUT AND FILL SLOPE DETAILS
3. PLACE TOPSOIL, SEED, AND MULCH ON ALL BARE SOIL AREAS (EXCEPT UNTREATED BASE LAYER).

24-NOV-2003
DGN File:N:\Projects\2528.RA\Sheet Files\Roadway Design\ts-8.dgn

UTAH DEPARTMENT OF TRANSPORTATION
REGION 4 — RICHFIELD, UTAH
ROADWAY DESIGN

REVISIONS

NO.	DATE	REMARKS
		REVISED PER COMMENTS RECEIVED BY UDOT
		ORIGINAL SUBMISSION FOR AUTHORIZATION

REVIEW
DESIGN S.J.O. 5/02 CHECK CGW 7/03
DRAWN S.J.O. 5/02 CHECK CGW 7/03
QUANT. S.J.O. 5/02 CHECK CGW 7/03
PROJECT DESIGN ENGINEER DATE
PRECONSTRUCTION ENGINEER DATE
PERSONAL RECORDS
APPROVED FOR USE BY UDOT DATE BY

WASHINGTON INTERCHANGE @ RP 13
TYPICAL SECTION SHEET
PROJECT NUMBER *SP-15-1(20)13
WASHINGTON COUNTY
SHEET NO. TS-8

TYPICAL SECTION 12

I-15 NORTHBOUND (ACCEL. LANE)
STA 333+67.24 TO STA 347+50.00
DESIGN SPEED 75 MPH
CLEAR ZONE - 30'

TYPICAL SECTION TRANSITIONS	BEGIN TAPER	END TAPER
TYPICAL SECTION 8 TO TYPICAL SECTION 12	STA 35+19.47	STA 39+55.86
		I-15 STA 333+67.24
TYPICAL SECTION 12 TO TYPICAL SECTION 2	STA 347+50.00	STA 351+00.00

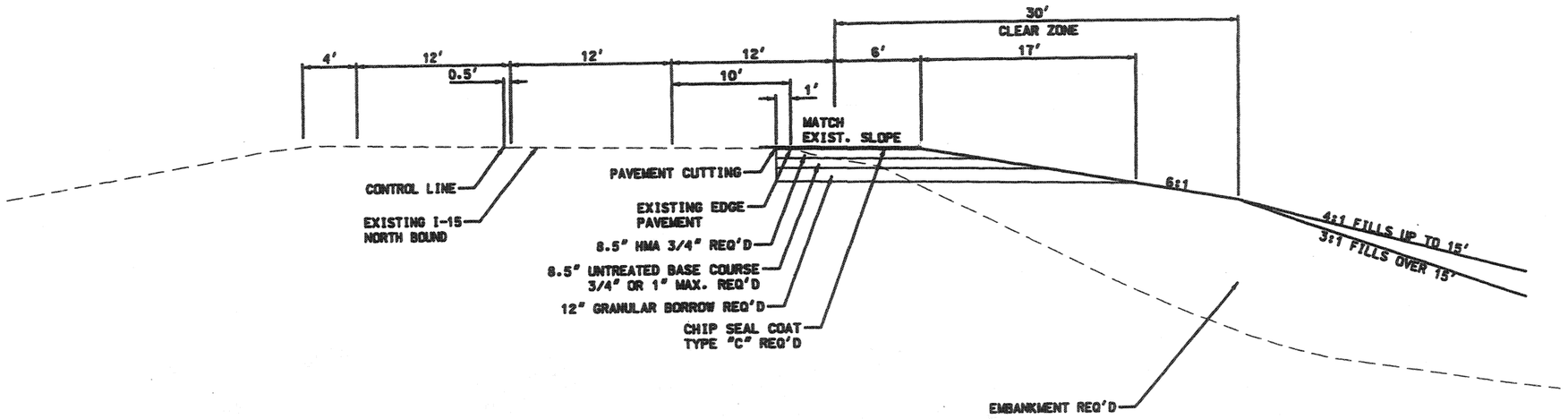

FILL SECTIONS

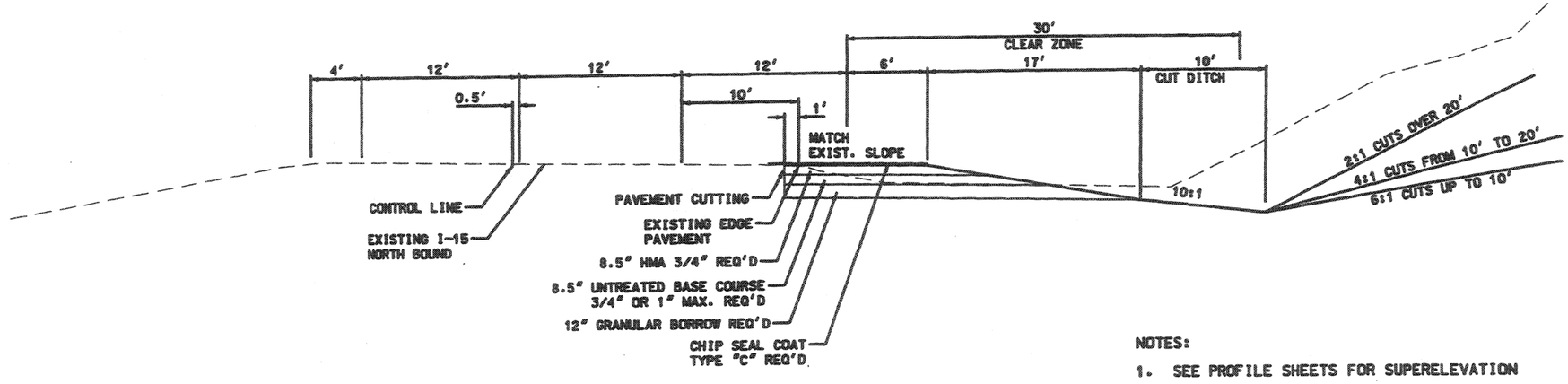

CUT SECTIONS

NOTES:

1. SEE PROFILE SHEETS FOR SUPERELEVATION
2. SEE SHEET DT-1 FOR CUT AND FILL SLOPE DETAILS
3. CHIP SEAL COAT SHALL OVERLAP EXISTING PAVEMENT 1 FT MIN.
4. PLACE TOPSOIL, SEED, AND MULCH ON ALL BARE SOIL AREAS (EXCEPT UNTREATED BASE LAYER).

NO. | DATE | DESIGN REV. BY | MAP / PARCEL & CORR. BY | APPROVED | REQUEST BY | REMARKS
ORIGINAL SUBMISSION FOR AUTHORIZATION
REVISIONS
DATE

UTAH DEPARTMENT OF TRANSPORTATION
REGION 4 — RICHFIELD, UTAH
ROADWAY DESIGN

DESIGN SJD 5/02 | CHECK CGW 1/03 | REVIEW
DRAWN SJD 5/02 | CHECK CGW 1/03 | DATE
QUANT. SJD 5/02 | CHECK CGW 1/03 | BY

ORIGINAL RECEIVED — DATE
APPROVED FOR USE BY UDOT — DATE
PROJECT DESIGN ENGINEER
PRECONSTRUCTION ENGINEER

WASHINGTON INTERCHANGE @ RP 13
TYPICAL SECTION SHEET
PROJECT NUMBER #SP-15-1(20)13
WASHINGTON COUNTY
SHEET NO. TS-9

DGN: Files\NV\Projects\2828.82\Sheet_Files\Roadway_Design\ts-9.dgn
DV-2883

TYPICAL SECTION 13

I-15 ACCESS ROAD
STA 10+40.00 TO STA 16+60.00 AND
STA 20+28.00 TO STA 22+60.00
DESIGN SPEED 45 MPH
CLEAR ZONE - 20'

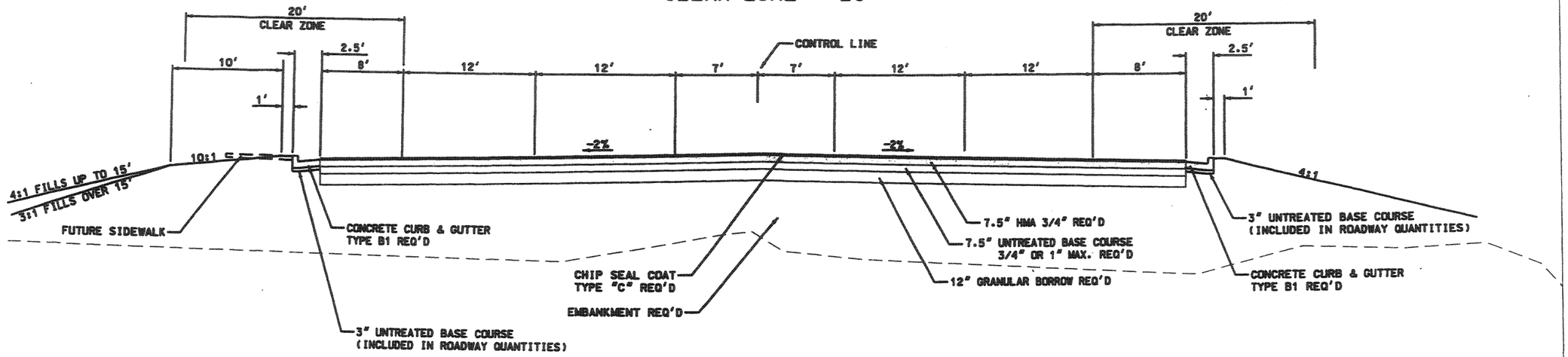

TYPICAL SECTION 14

I-15 ACCESS ROAD
STA 22+60.00 TO STA 23+20.00
DESIGN SPEED 45 MPH
CLEAR ZONE - 20'

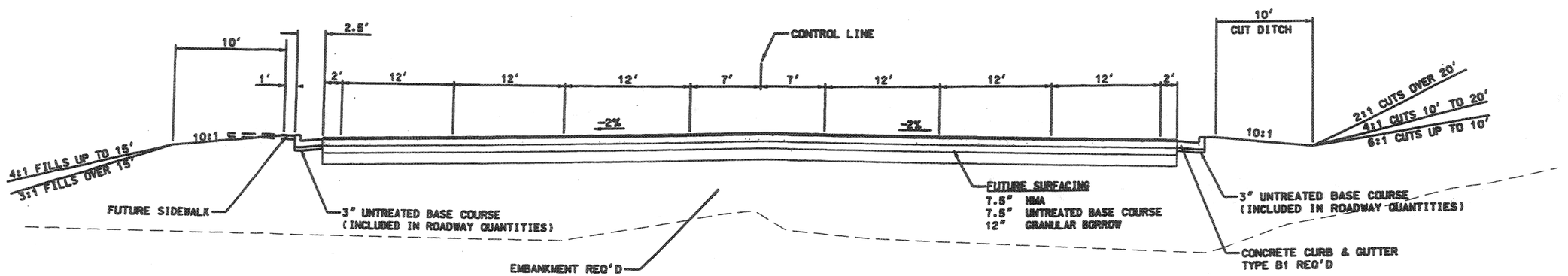

NOTES:

1. SEE PROFILE SHEETS FOR SUPERELEVATION
2. SEE SHEET DT-1 FOR CUT AND FILL SLOPE DETAILS
3. PLACE TOPSOIL, SEED, AND MULCH ON ALL BARE SOIL AREAS (EXCEPT TOP OF UNTREATED BASE JUST PLACE SEED AND MULCH).

REVISIONS

NO.	DATE	REMARKS
		ORIGINAL SUBMISSION FOR AUTHORIZATION
	DATE	

UTAH DEPARTMENT OF TRANSPORTATION
REGION 4 -- RICHFIELD, UTAH
ROADWAY DESIGN

DESIGN SJO	5/02	CHECK CGW	1/03
DRAWN SJO	5/02	CHECK CGW	1/03
QUANT. SJO	5/02	CHECK CGW	1/03

REVIEW
DATE
BY

APPROVAL RECOMMENDED: DATE — PROJECT DESIGN ENGINEER
APPROVED FOR USE BY UDOT: DATE — PRECONSTRUCTION ENGINEER

WASHINGTON INTERCHANGE @ RP 13
TYPICAL SECTION SHEET
PROJECT NUMBER *SP-15-1(20)13
WASHINGTON COUNTY
SHEET NO. TS-10

24-NOV-2003
DGN File:N:\Projects\2628.83\Sheet Files\Roadway Design\ts-10.dgn

TYPICAL SECTION 15

I-15 ACCESS ROAD
STA 24+95.00 TO STA 26+60.00
DESIGN SPEED 45 MPH
CLEAR ZONE - 20'

TYPICAL SECTION TRANSITIONS	BEGIN TAPER	END TAPER
TYPICAL SECTION 14 TO TYPICAL SECTION 15	STA 23+20.00	STA 24+95.00
TYPICAL SECTION 15 TO TYPICAL SECTION 16	STA 26+60.00	STA 28+50.00

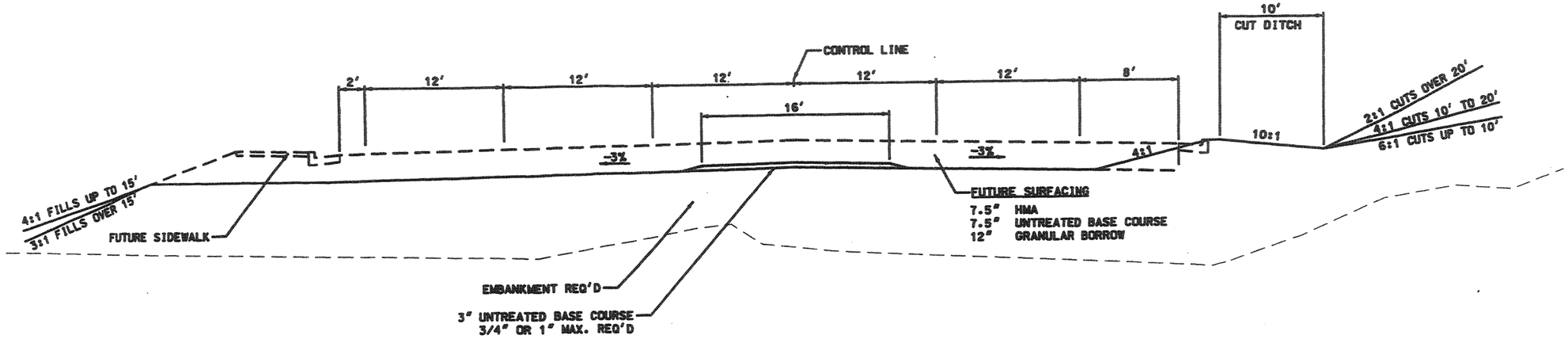

TYPICAL SECTION 16

I-15 ACCESS ROAD
STA 28+50.00 TO STA 31+66.67
DESIGN SPEED 45 MPH
CLEAR ZONE - 20'

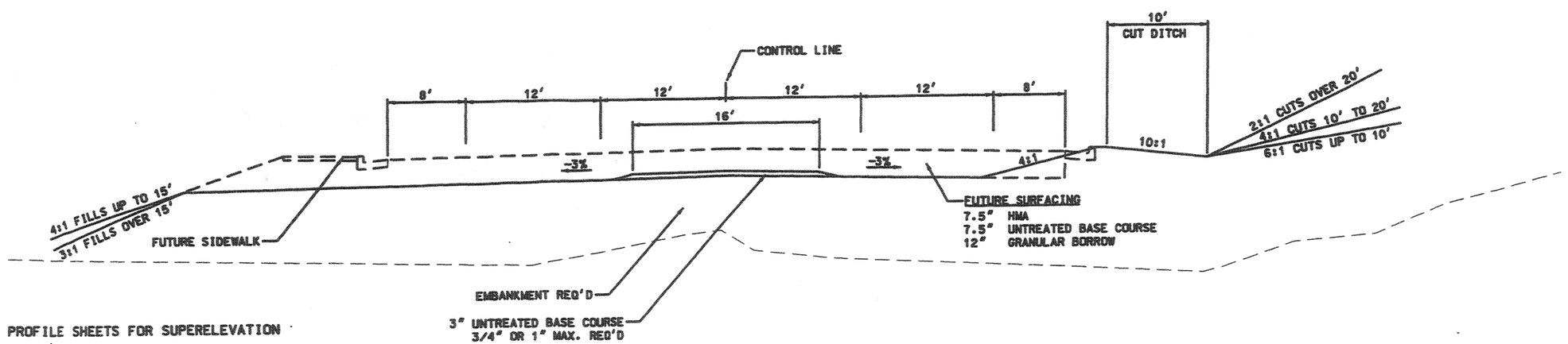

NOTES:

1. SEE PROFILE SHEETS FOR SUPERELEVATION
2. SEE SHEET DT-1 FOR CUT AND FILL SLOPE DETAILS
3. PLACE TOPSOIL, SEED, AND MULCH ON ALL BARE SOIL AREAS (EXCEPT TOP OF UNTREATED BASE JUST PLACE SEED AND MULCH).

REVISIONS

NO.	DATE	DESIGN REV. BY	MAPS CORR. BY	PARCEL # AFFECTED	REQUEST BY	REMARKS
	DATE	ORIGINAL SUBMISSION FOR AUTHORIZATION				

UTAH DEPARTMENT OF TRANSPORTATION
REGION 4 — RICHFIELD, UTAH
ROADWAY DESIGN

	REVIEW	DESIGN SJO 5/02	CHECK CGW 7/03
APPROVAL RECOMM.	DATE	PROJECT DESIGN ENGINEER	
APPROVED FOR USE BY UDOT	DATE	PRECONSTRUCTION ENGINEER	DRAWN SJO 5/02 / CHECK CGW 7/03 / QUANT. SJO 5/02 / CHECK CGW 7/03

WASHINGTON INTERCHANGE @ RP 13

TYPICAL SECTION SHEET

PROJECT NUMBER #SP-15-1(20)13

WASHINGTON COUNTY

SHEET NO. TS-11

DGN File: N:\Projects\2628.02\Sheet_Files\Roadway_Design\ts-11.dgn
DV-2663

DETAIL SHEET

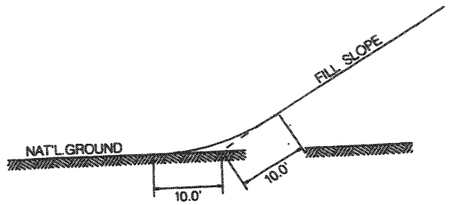

ROUND ALL FILL SLOPES AS SHOWN
EXCEPT IN ENVIRONMENTALLY SENSITIVE AREAS.

FILL SLOPE ROUNDING DETAIL

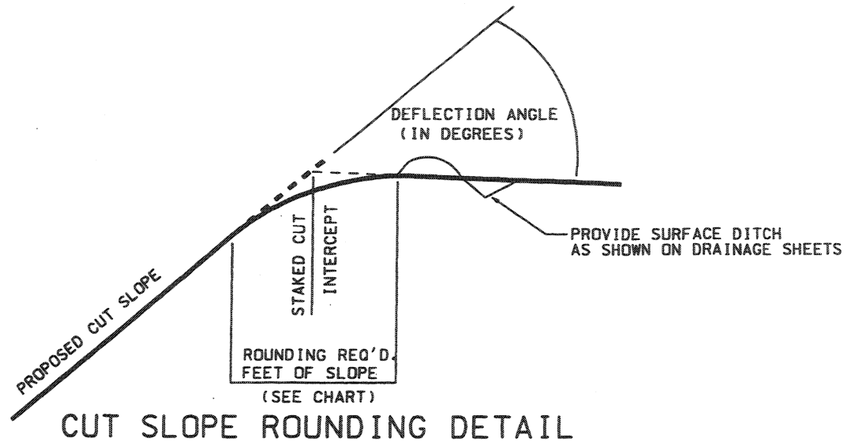

CUT SLOPE ROUNDING DETAIL

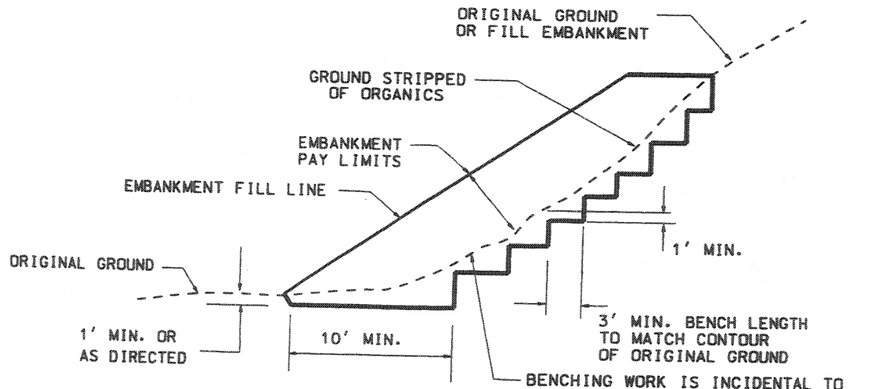

BENCHED SLOPE DETAIL

REQUIRED WHEN FILL TO BE PLACED
ON ANY SLOPE STEEPER THAN 4:1

SLOPE ROUNDING CHART					
		SLOPE HEIGHT (FEET)			
		5–15	15–30	30–60	60+
DEFLECTION ANGLE (DEG.)	10–20	5	6	8	10
	20–30	10	12	16	20
	30–40	15	18	24	30
	40+	20	24	32	40

SLOPE ROUNDING REQUIRED FOR THE SIDES OF
CUT SLOPES AS WELL AS TOP OF CUT SLOPES.

UTAH DEPARTMENT OF TRANSPORTATION
REGION 4 -- BICHFIELD, UTAH
ROADWAY DESIGN

REVISIONS

NO.	DATE	REMARKS
		DESIGN MAPS BEAR NO CORR. BY APPROVED BY CANCELS REQUEST
		ORIGINAL SUBMISSION FOR AUTHORIZATION
	DATE	

DESIGN SJO 5/02 CHECK CGW 7/03 REVIEW
DRAWN SJO 5/02 CHECK CGW 7/03 DATE
QUANT. SJO 5/02 CHECK CGW 7/03 BY

APPROVAL RECOMM. DATE PROJECT DESIGN ENGINEER
APPROVED FOR USE BY UDOT DATE PRECONSTRUCTION ENGINEER

WASHINGTON INTERCHANGE @ RP 13

DETAIL SHEET

PROJECT NUMBER SP-15-1(20)113

WASHINGTON COUNTY

SHEET NO. DT-1

DETAIL SHEET

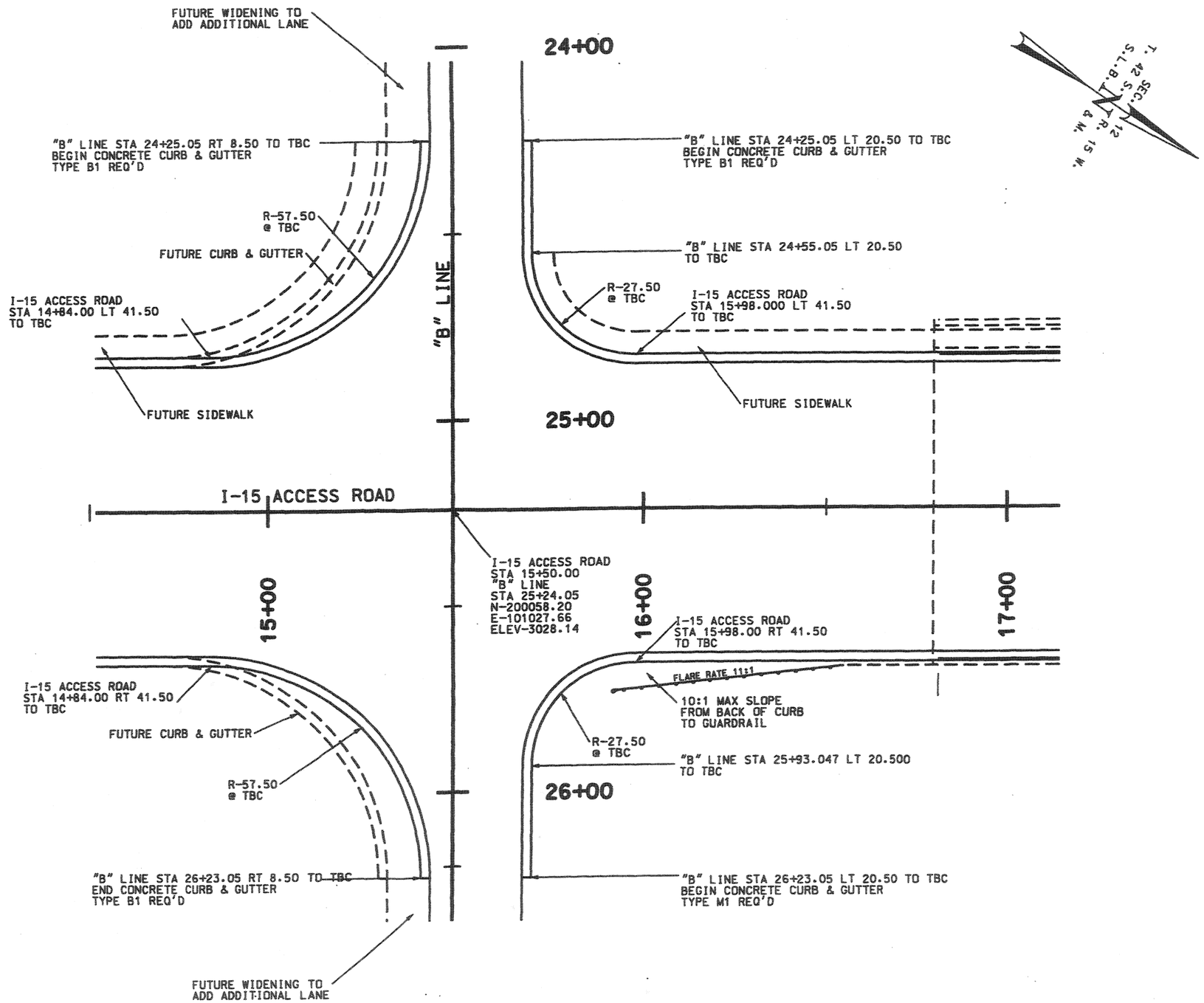

NO.	DATE	REVISIONS	REMARKS
		ORIGINAL SUBMISSION FOR AUTHORIZATION	
		REVISED LUMP PARCEL REQUEST	
		REVISED LUMP PARCEL REQUEST	

UTAH DEPARTMENT OF TRANSPORTATION
REGION 4 — RICHFIELD, UTAH
ROADWAY DESIGN

APPROVAL RECOMM.	DATE	PROJECT DESIGN ENGINEER	DESIGN S.J.O 5/02 CHECK C.G.M 1/03
APPROVED FOR USE BY UDOT	DATE	PRECONSTRUCTION ENGINEER	DRAWN S.J.O 5/02 CHECK C.G.M 1/03
			QUANT. S.J.O 5/02 CHECK C.G.M 1/03

REVIEW
DATE
BY

WASHINGTON INTERCHANGE @ RP 13

DETAIL SHEET

INTERSECTION DETAILS

PROJECT NUMBER *SP-15-1(20)13

WASHINGTON COUNTY

SHEET NO. DT-2

DETAIL SHEET

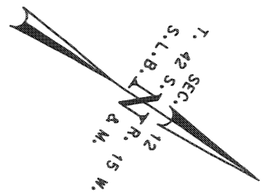

"A" LINE STA 25+86.15 RT 20.50 TO TBC
BEGIN CONCRETE CURB & GUTTER
TYPE B1 REQ'D

"A" LINE STA 26+22.15 RT 20.50
TO TBC

R-27.50

I-15 ACCESS ROAD
STA 21+94.89 LT 41.50
TO TBC

FUTURE SIDEWALK

"A" LINE

FUTURE WIDENING TO
ADD ADDITIONAL LANE

"A" LINE STA 25+86.15 LT 8.50 TO TBC
BEGIN CONCRETE CURB & GUTTER
TYPE B1 REQ'D

26+00

FUTURE CURB & GUTTER

R-57.50

I-15 ACCESS ROAD
STA 23+08.89 LT 47.50
TO TBC

FUTURE CURB & GUTTER
BY OTHERS

I-15 ACCESS ROAD

20+00

21+00

22+00

27+00

23+00

I-15 ACCESS ROAD
STA 22+42.89
"A" LINE
STA 26+91.15
N-200781.65
E-100550.73
ELEV-3055.99

FUTURE CURB & GUTTER
BY OTHERS

I-15 ACCESS ROAD
STA 21+94.89 RT 41.50
TO TBC

R-27.50

I-15 ACCESS ROAD
STA 23+08.89 RT 41.50
TO TBC

R-57.50

FUTURE CURB & GUTTER

"A" LINE STA 27+90.15 LT 8.50 TO TBC
END CONCRETE CURB & GUTTER
TYPE B1 REQ'D

"A" LINE STA 27+90.15 RT 20.50 TO TBC
END CONCRETE CURB & GUTTER
TYPE B1 REQ'D

28+00

FUTURE WIDENING TO
ADD ADDITIONAL LANE

NO.	DATE	DESIGN REVIEW	MAPS CORR. BY	PARCELS APPROVED	REQUEST BY	REMARKS
		ORIGINAL SUBMISSION FOR AUTHORIZATION				
	DATE	REVISIONS				

UTAH DEPARTMENT OF TRANSPORTATION
REGION 4 — RICHFIELD, UTAH
ROADWAY DESIGN

DESIGN	S.W. 5/02	CHECK CGM 1/03	REVIEW
DRAWN	S.W. 5/02	CHECK CGM 1/03	DATE
QUANT.	S.W. 5/02	CHECK CGM 1/03	BY

APPROVAL RECOMM. — DATE — PROJECT DESIGN ENGINEER
APPROVED FOR USE BY UDOT — DATE — PRECONSTRUCTION ENGINEER

WASHINGTON INTERCHANGE @ RP 13
DETAIL SHEET
INTERSECTION DETAILS
PROJECT NUMBER #SP-15-1(20)13

WASHINGTON COUNTY

SHEET NO. DT-3

DETAIL SHEET

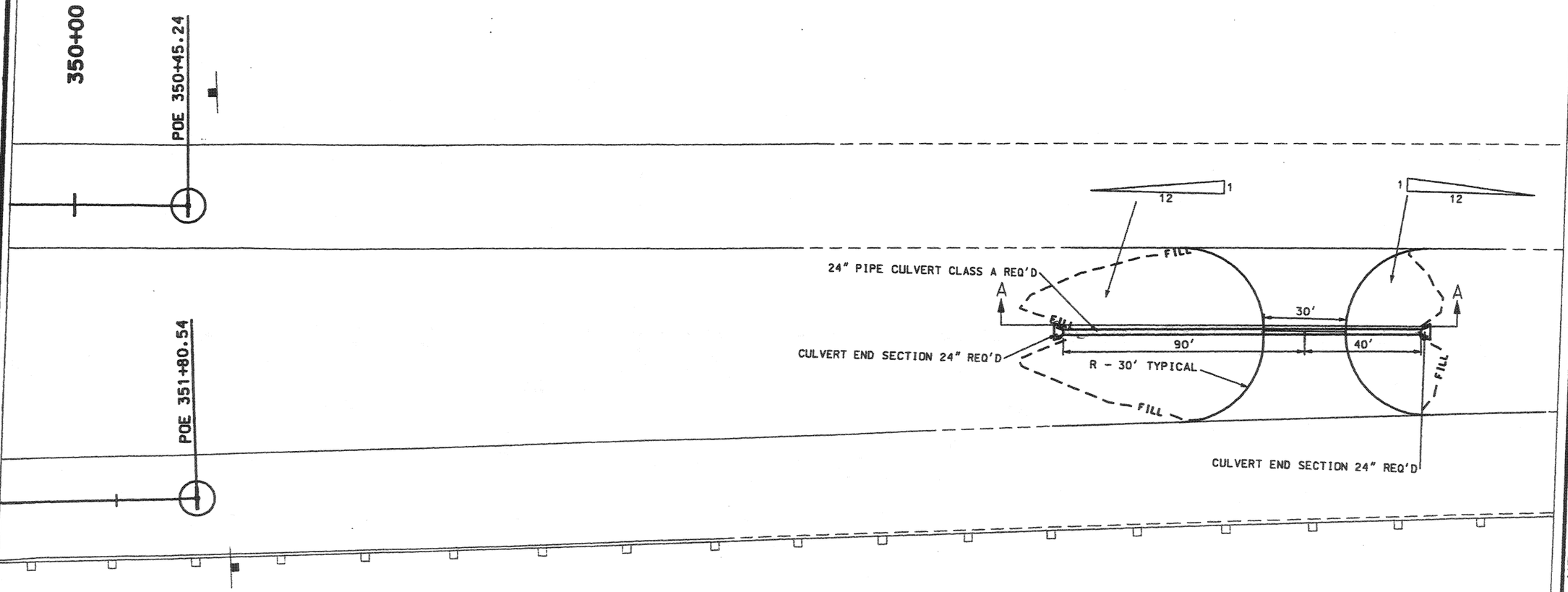

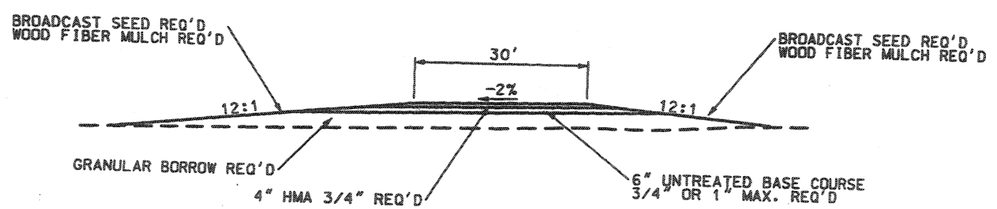

SECTION A-A
RP 14.08

I-15 NB RP 14.08
FREEWAY MEDIAN TURN AROUND

UTAH DEPARTMENT OF TRANSPORTATION
REGION 4 — RICHFIELD, UTAH
ROADWAY DESIGN

WASHINGTON INTERCHANGE @ RP 13
DETAIL SHEET
FREEWAY MEDIAN TURN AROUND
PROJECT NUMBER *SP-15-1(20)13

WASHINGTON COUNTY

REVISIONS

NO.	DATE	REMARKS
		ORIGINAL SUBMISSION FOR AUTHORIZATION

DESIGN SJD 5/02 CHECK CGW 5/02 REVIEW
DRAIN SJD 5/02 CHECK CGW 7/03 DATE
MAINT. SJD 5/02 CHECK CGW 7/03 BY

APPROVED BY UDOT — REGIONAL ENGINEER — DATE
APPROVED BY UDOT — PROJECT DESIGN ENGINEER — DATE
APPROVED BY UDOT — PRECONSTRUCTION ENGINEER — DATE

SHEET NO. DT-4

DETAIL SHEET

8′ X 10′ BOX CULVERT OUTLET
"A" LINE STA 31+85 RT
STRUCTURE # E-2519

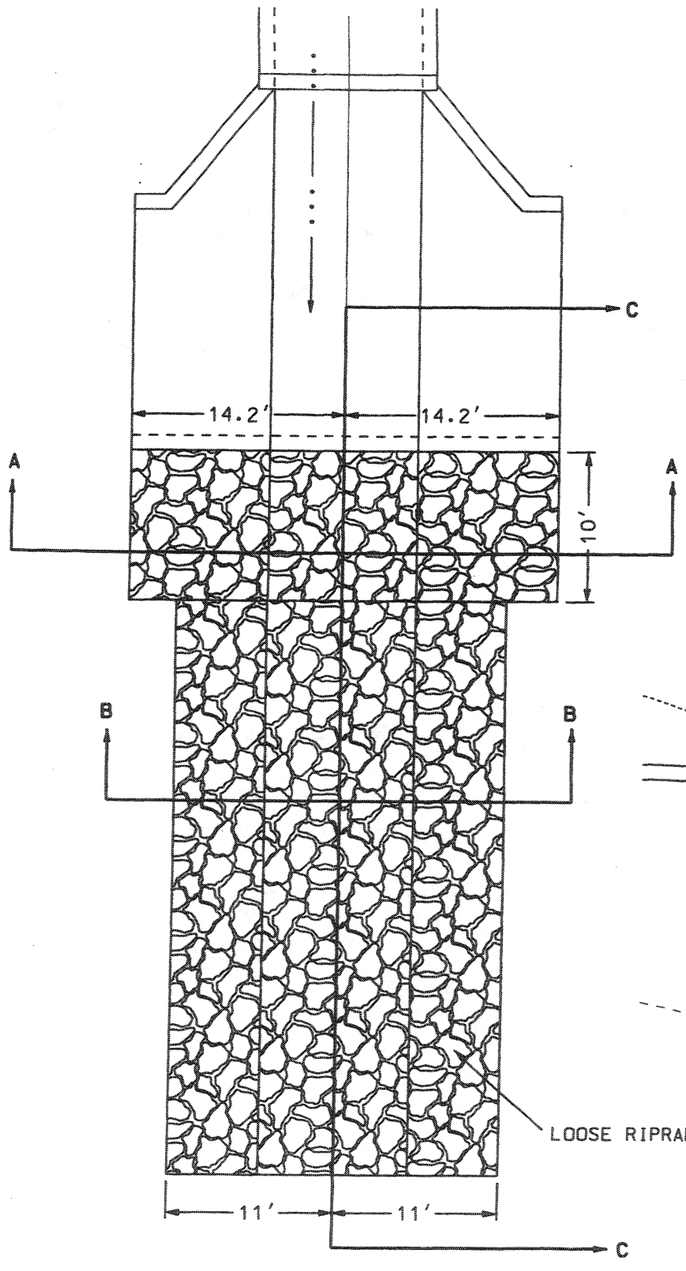

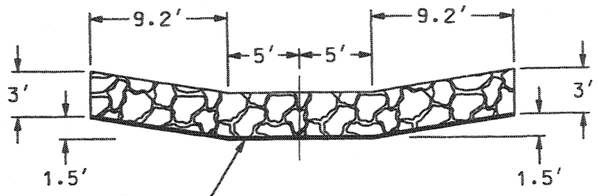

SECTION AA

GEOTEXTILES – EROSION CONTROL REQ'D

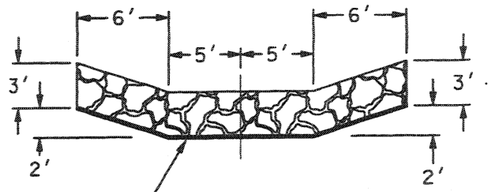

SECTION BB

GEOTEXTILES – EROSION CONTROL REQ'D

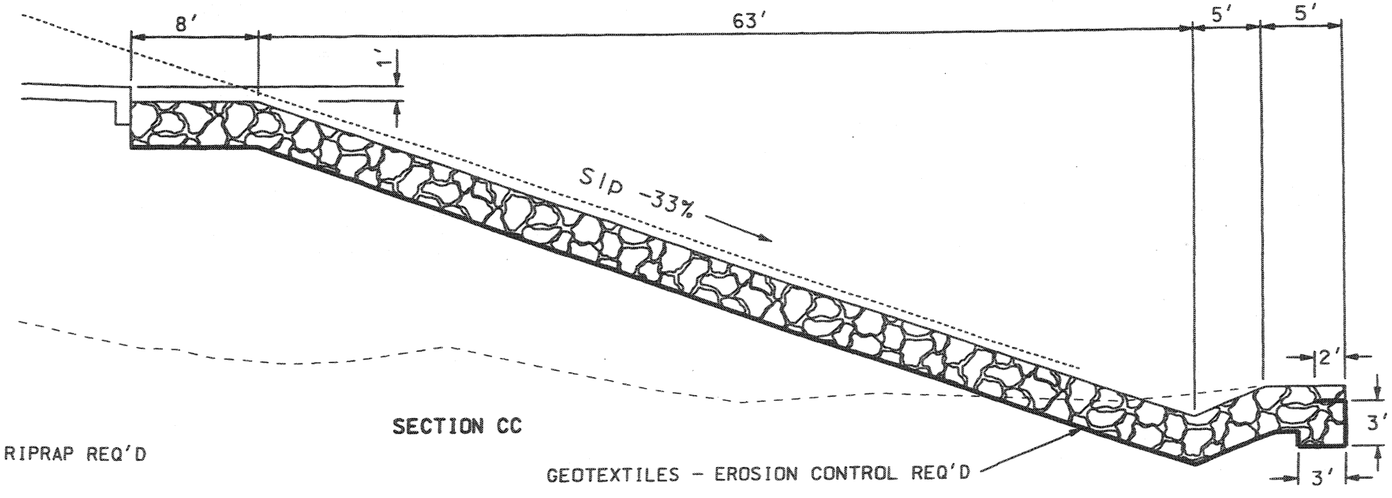

SECTION CC

GEOTEXTILES – EROSION CONTROL REQ'D

RIPRAP DETAILS

NOTES:

1. SEE STRUCTURE DRAWINGS FOR DETAILS OF CONCRETE WALLS AND APRON

UTAH DEPARTMENT OF TRANSPORTATION
REGION 4 — RICHFIELD, UTAH
ROADWAY DESIGN

DESIGN SJO 5/02 CHECK CGV 7/03 REVIEW
DRAWN SJO 5/02 CHECK CGV 7/03 DATE
QUANT. SJO 5/02 CHECK CGV 7/03 BY

NO.	DATE	DESIGN REV. BY	MAPS CORR. BY	PARCELS APPROVED	REQUEST BY	REMARKS
						ORIGINAL SUBMISSION FOR AUTHORIZATION

REVISIONS

APPROVAL RECOMMENDED — DATE — PROJECT DESIGN ENGINEER
APPROVED FOR USE BY UDOT — DATE — PRECONSTRUCTION ENGINEER

WASHINGTON INTERCHANGE @ RP 13
DETAIL SHEET
RIPRAP DETAILS
PROJECT NUMBER #SP-15-1(20)13

WASHINGTON COUNTY

SHEET NO. DT-5

DETAIL SHEET

8′ X 10′ BOX CULVERT OUTLET
"B" LINE STA 29+15 RT
STRUCTURE # E1E-1331

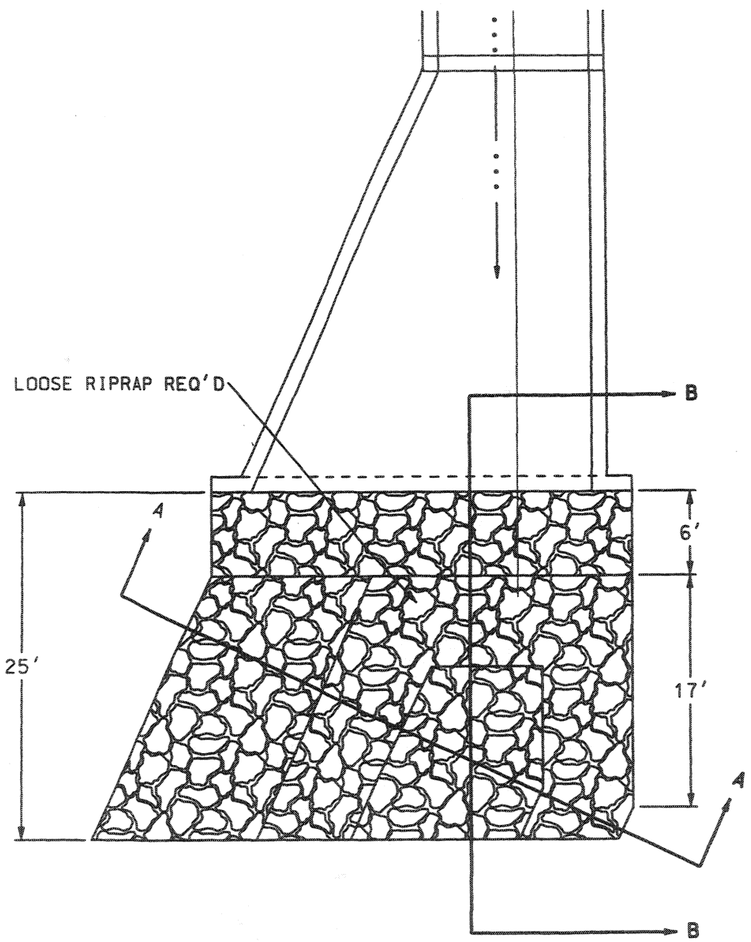

VARIOUS CULVERT OUTLETS

STATION		STRUCT. #	WIDTH
323+50	SB I-15	E1E-1330	W = 26.5′
295+82	SB I-15	H-2008	W = 20.3′
296+42	NB I-15	H-2008	W = 20.3′
18+95	SB RAMP	H-2008	W = 20.3′
15+65	NB RAMP	H-2009	W = 15.4′
29+44	ACCESS RD	H-2008	W = 20.3′

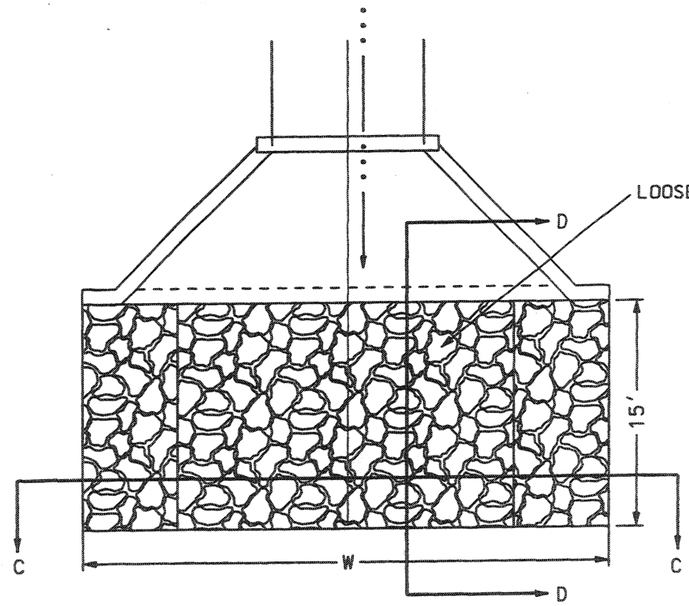

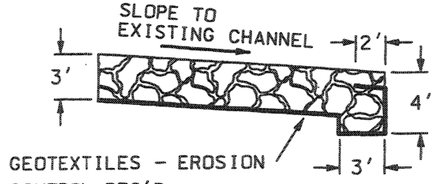

SECTION DD

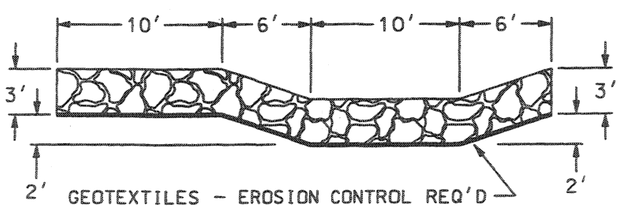

SECTION AA

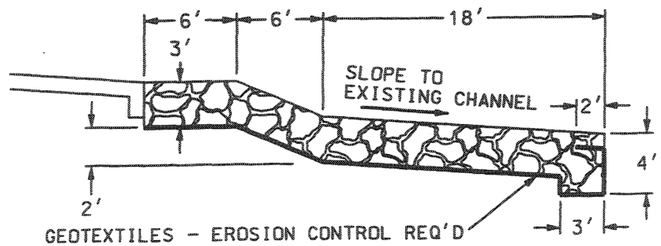

SECTION BB

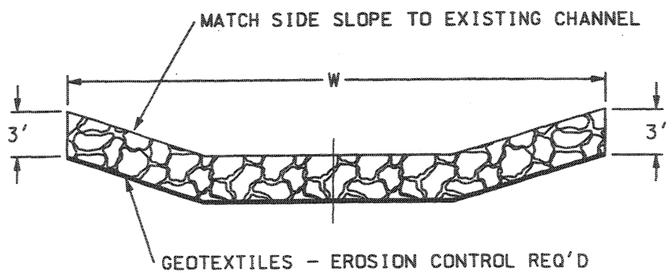

SECTION CC

RIPRAP DETAILS

NOTES:

1. SEE STRUCTURE DRAWINGS FOR DETAILS OF CONCRETE WALLS AND APRON

REVISIONS

NO.	DATE	DESIGN, MAPS, QUANT. ENTERED	PARCELS AFFECTED	REQUEST BY	REMARKS
	DATE	ORIGINAL SUBMISSION FOR AUTHORIZATION			

UTAH DEPARTMENT OF TRANSPORTATION
REGION 4 — RICHFIELD, UTAH
ROADWAY DESIGN

REVIEW			
CHECK	CGM	7/03	
CHECK	CGM	7/03	DATE
CHECK	CGM	7/03	BY
DESIGN	SJO	5/02	
DRAFT	SJO	5/02	
QUANT.	SJO	5/02	

APPROVAL RECOMMENDED — DATE — PROJECT DESIGN ENGINEER
APPROVED FOR USE BY UDOT — DATE — PRECONSTRUCTION ENGINEER

WASHINGTON INTERCHANGE @ RP 13

DETAIL SHEET

RIPRAP DETAILS

PROJECT NUMBER #SP-15-1(20)13

WASHINGTON COUNTY

SHEET NO. DT-6

DETAIL SHEET

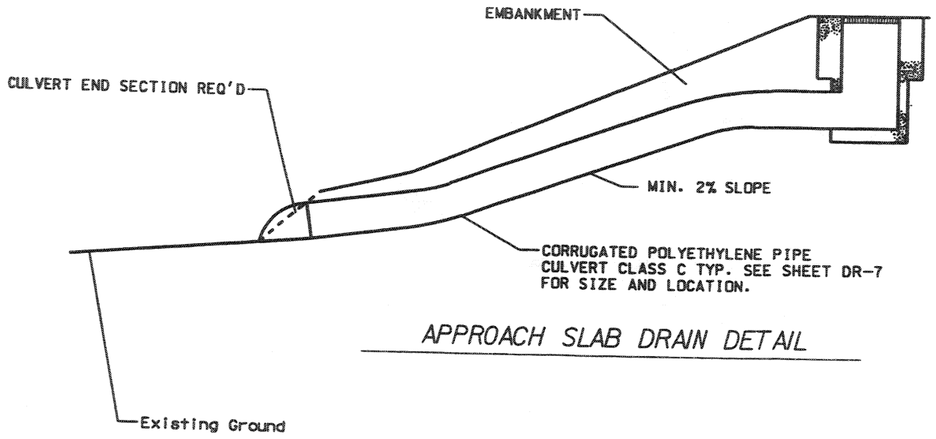

APPROACH SLAB DRAIN DETAIL

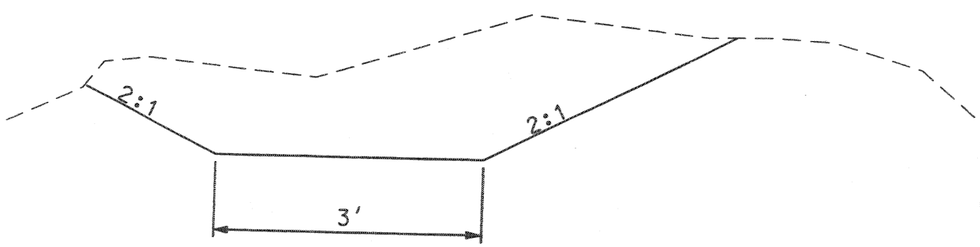

SMALL DITCH SECTION

UTAH DEPARTMENT OF TRANSPORTATION
-- RICHFIELD, UTAH
REGION 4
ROADWAY DESIGN

WASHINGTON INTERCHANGE @ RP 13
DETAIL SHEET
PROJECT NUMBER #SP-15-1(20)13

WASHINGTON COUNTY
SHEET NO. DT-7

DESIGN	S.H.O.	5/02	CHECK	CGH	1/03	REVIEW
DRAWN	S.H.O.	5/02	CHECK	CGH	1/03	DATE
QUANT.	S.H.O.	5/02	CHECK	CGH	1/03	BY

APPROVAL RECOMM. DATE — PROJECT DESIGN ENGINEER
APPROVED FOR USE BY UDOT DATE — PRECONSTRUCTION ENGINEER

REVISIONS

NO.	DATE	REVISION MADE AT REQUEST OF	PARCEL & OWNER	REQUEST BY	REMARKS
		ORIGINAL SUBMISSION FOR AUTHORIZATION			

DATE

DETAIL SHEET

RP 12.11 NB I-15
RP 14.75 SB I-15

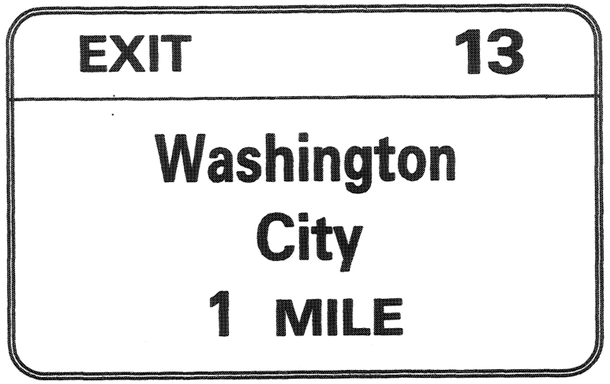

STA 10+00 B LINE
STA 45+00 A LINE

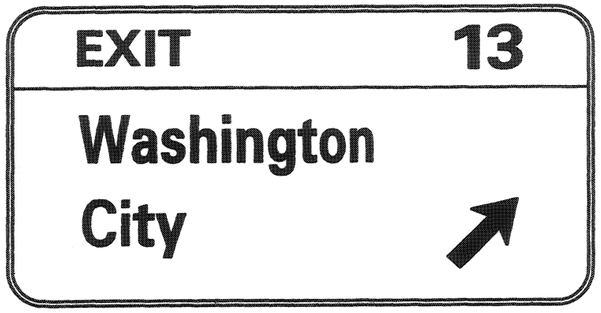

RP 12.61 NB I-15
RP 14.25 SB I-15

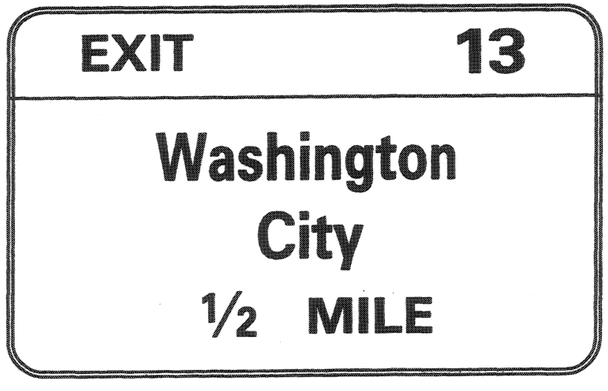

STA 18+00 B LINE
STA 37+50 A LINE

REVISIONS

NO.	DATE	DESIGN MARK REV. BY	CONST. BY	PARCELS AFFECTED	PROJECT NO. BY	REMARKS
	DATE	ORIGINAL SUBMISSION FOR AUTHORIZATION				

UTAH DEPARTMENT OF TRANSPORTATION
— RICHFIELD, UTAH
REGION 4
ROADWAY DESIGN

DESIGN SJO 5/02	CHECK CGW 7/03	REVIEW	
DRAWN SJO 5/02	CHECK CGW 7/03	DATE	
QUANT. SJO 5/02	CHECK CGW 7/03	BY	

APPROVAL RECOMM. DATE PROJECT DESIGN ENGINEER
APPROVED BY UDOT DATE PRECONSTRUCTION ENGINEER

WASHINGTON INTERCHANGE @ RP 13
DETAIL SHEET
SIGN DETAILS
PROJECT NUMBER #SP-15-1(20)13
WASHINGTON COUNTY
SHEET NO. DT-8

DETAIL SHEET

STA 14+05 ACCESS ROAD

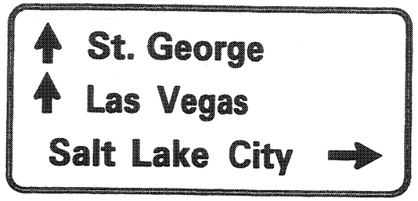

STA 28+30 ACCESS ROAD

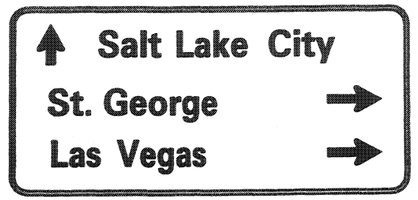

STA 17+50 B LINE

STA 33+00 A LINE

STA 16+80 ACCESS ROAD

STA 21+50 ACCESS ROAD

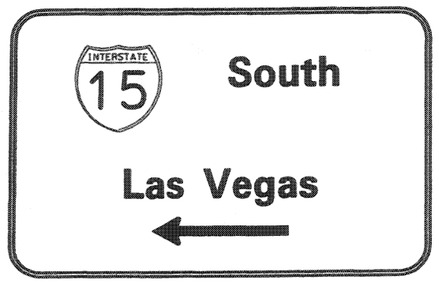

REVISIONS

NO.	DATE	REMARKS
		ORIGINAL SUBMISSION FOR AUTHORIZATION

UTAH DEPARTMENT OF TRANSPORTATION
REGION 4 — RICHFIELD, UTAH
ROADWAY DESIGN

DESIGN SJO 5/02	CHECK CGW 7/03	REVIEW	
DRAWN SJO 5/02	CHECK CGW 7/03	DATE	
QUANT. SJO 5/02	CHECK CGW 7/03	BY	

APPROVAL RECOMM. DATE — PROJECT DESIGN ENGINEER
APPROVED FOR USE BY UDOT DATE — PRECONSTRUCTION ENGINEER

WASHINGTON INTERCHANGE @ RP 13

DETAIL SHEET

SIGN DETAILS

PROJECT NUMBER *SP-15-1(20)13

WASHINGTON COUNTY

SHEET NO. DT-9

DETAIL SHEET

TORTOISE FENCE DETAILS

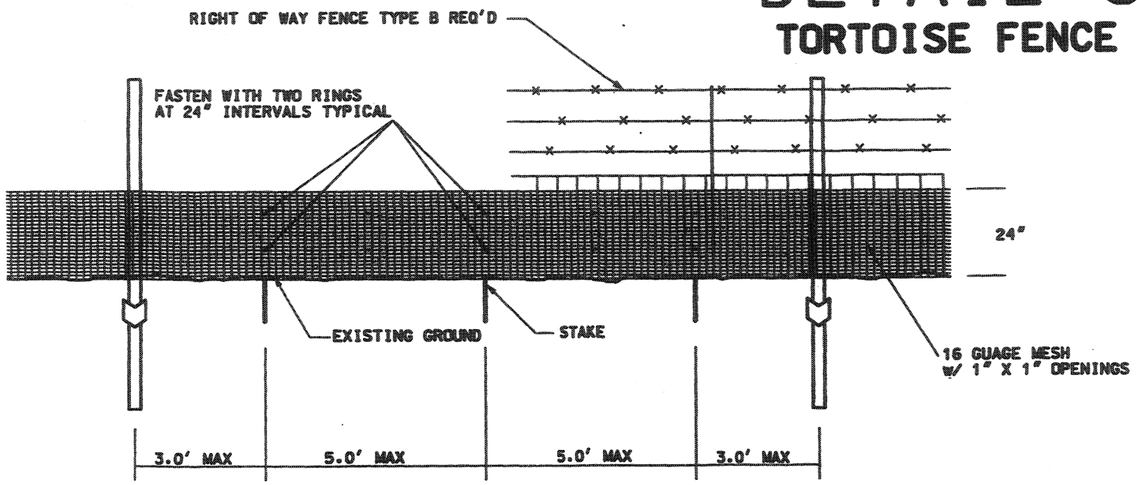

RIGHT-OF-WAY FENCE WITH TORTOISE FENCE ATTACHED

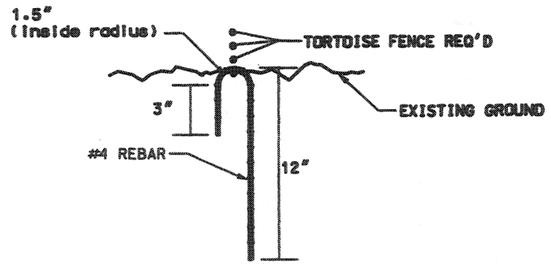

STAKE DETAIL

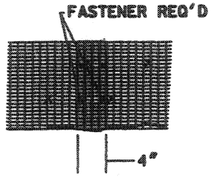

VERTICAL SPLICING DETAIL

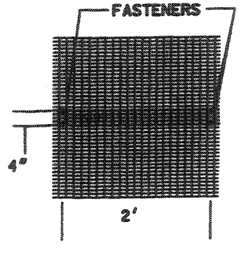

HORIZONTAL SPLICING DETAIL

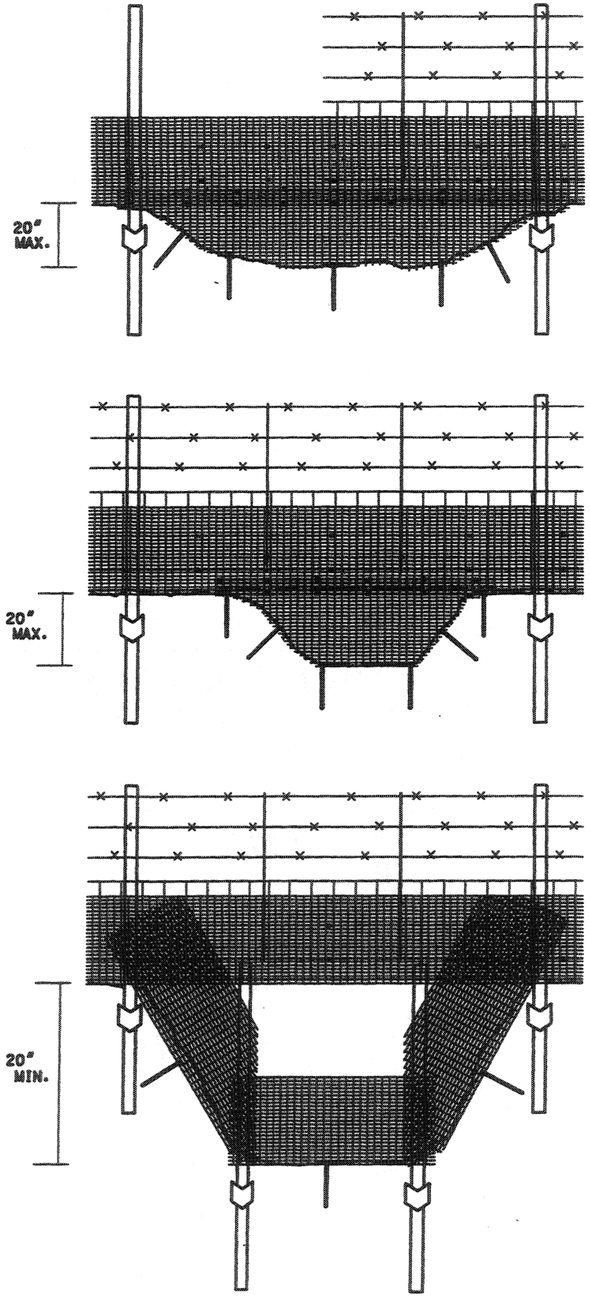

TYPICAL DIP SECTIONS

REVISIONS

NO.	DATE	DESIGN REVIEW	MAPS CORR. BY	PARCELS AFFECTED	REQUEST BY	REMARKS
						ORIGINAL SUBMISSION FOR AUTHORIZATION

UTAH DEPARTMENT OF TRANSPORTATION
REGION 4 — RICHFIELD, UTAH
ROADWAY DESIGN

DESIGN	SJD 5/02	CHECK CGW 7/03	REVIEW
DRAWN	SJD 5/02	CHECK CGW 7/03	DATE
QUANT.	SJD 5/02	CHECK CGW 7/03	BY

APPROVAL RECOMMENDED — PROJECT DESIGN ENGINEER — DATE
APPROVED FOR USE BY UDOT — PRECONSTRUCTION ENGINEER — DATE

WASHINGTON INTERCHANGE @ RP 13
DETAIL SHEET
TORTOISE FENCE DETAILS
PROJECT NUMBER #SP-15-1(20)13

WASHINGTON COUNTY

SHEET NO. DT-10

SUMMARY SHEET

SUMMARY OF ITEMS

DESCRIPTION	UNIT	QUANTITY
LANE RENTAL	LUMP	0
MOBILIZATION	LUMP	0
PUBLIC INFORMATION SERVICES	LUMP	0
TRAFFIC CONTROL	LUMP	0
ENVIRONMENTAL FENCE	FT	180
CHECK DAM (STONE)	EACH	48
SILT FENCE	FT	2,207
DUST CONTROL AND WATERING	1000 GAL	15,323
SURVEY (SPECIALTY ITEM)	LUMP	0
GRANULAR BORROW	CU YD	16,651
BORROW (PLAN QUANTITY)	CU YD	168,056
GEOTEXTILES - EROSION CONTROL	SQ YD	533
REMOVE TREE	EACH	10
REMOVE GUARDRAIL	FT	4,047
REMOVE FENCE	FT	9,955
ROADWAY EXCAVATION (PLAN QUANTITY)	CU YD	72,622
SMALL DITCH EXCAVATION	CU YD	263
SURFACE DITCH	FT	3,673
EMBANKMENT FOR BRIDGE	CU YD	62,285
LOOSE RIPRAP	CU YD	533
54 INCH PIPE CULVERT, CLASS C	FT	92
72 INCH PIPE CULVERT, CLASS C	FT	400
18 INCH PIPE CULVERT, CLASS C	FT	737
24 INCH PIPE CULVERT, CLASS C	FT	1,672
30 INCH PIPE CULVERT, CLASS C	FT	22
12 INCH CORRUGATED POLYETHYLENE (HDPE)PIPE CULVERT, CLASS C	FT	220
72 INCH STRUCTURAL STEEL PLATE PIPE CULVERT, CLASS E	FT	68
CULVERT END SECTIONS 12 INCH	EACH	2
CULVERT END SECTIONS 18 INCH	EACH	5
CULVERT END SECTIONS 24 INCH	EACH	26
CULVERT END SECTIONS 30 INCH	EACH	1
RECTANGULAR GRATE AND FRAME (STANDARD GRATING) STD DWG GF 3	EACH	2
RECTANGULAR GRATE AND FRAME (BICYCLE SAFE GRATING) STD DWG GF 3	EACH	10
UNTREATED BASE COURSE 3/4 INCH OR 1 INCH MAX	CU YD	9,492
HMA - 3/4 INCH	TON	16,247
LIQUID ASPHALT MC-70 OR MC-250	TON	57
EMULSIFIED ASPHALT SS-1	TON	20
PAVEMENT MESSAGE PAINT	EACH	6
PAVEMENT MARKING PAINT	GAL	266
CONCRETE CURB AND GUTTER TYPE B1	FT	1,650
CONCRETE CURB AND GUTTER TYPE M1	FT	219
CHIP SEAL COAT, TYPE C	SQ YD	28,880
EMULSIFIED ASPHALT CRS-2P	TON	50
RIGHT-OF-WAY FENCE, TYPE B (METAL POST)	FT	12,383
RIGHT-OF-WAY GATE 12FT	EACH	1
RIGHT-OF-WAY BRACE POST	EACH	71
TORTOISE FENCE	FT	6,073
BEAM GUARDRAIL	FT	2,950
GUARDRAIL TRANSITION ELEMENT	EACH	1
PRECAST CONCRETE BARRIER	FT	100
DELINEATOR TYPE II	EACH	129
DELINEATOR - CULVERT MARKER	EACH	31
DELINEATOR - FREEWAY TURN AROUND	EACH	6
CRASH CUSHION TYPE B	EACH	1
CRASH CUSHION TYPE G	EACH	1
CRASH CUSHION TYPE H	EACH	1
RELOCATION OF SIGN	EACH	4
SIGN TYPE P-2	SQ FT	1141
AUXILIARY SIGN TYPE P-2	SQ FT	17
SIGN TYPE P-2, 36 INCH X 36 INCH	EACH	4
SIGN TYPE P-2, 48 INCH X 48 INCH	EACH	12
SIGN FOUNDATION	EACH	20
BOUNDARY SURVEY AND SURVEY PLAT	LUMP	0
RIGHT-OF-WAY MARKER	EACH	15
REINFORCING STEEL - COATED	LB	2,400

SUMMARY OF ITEMS

DESCRIPTION	UNIT	QUANTITY
CONCRETE-SMALL STRUCTURE	CU YD	19
EROSION CONTROL BLANKET	SQ YD	3,720
PRESSURIZED IRRIGATION SYSTEM	LUMP	0
WOOD FIBER MULCH	ACRE	29
STRIP, STOCKPILE AND SPREAD TOPSOIL	SQ YD	94,626
RIVER ROCK (RED)	SQ FT	136,673
RIVER ROCK (GRAY)	SQ FT	86,681
COBBLE STONE	SQ FT	205,009
CONCRETE EDGING	FEET	5,638
ALUMINUM EDGING	FEET	4,468
DRILL SEED (ROADWAY MIX)	ACRE	10
BROADCAST SEED (ROADWAY MIX)	ACRE	9
BROADCAST SEED (WILD FLOWER MIX)	ACRE	10
Cercis canadensis mexicana MEXICAN REDBUD - No. 5 Container	EACH	65
Larrea tridentate CREOSOTE - No. 5 Container	EACH	19
Quercus turbinella SHRUB LIVE OAK - No. 5 Container	EACH	53
Atriplex canescens FOURWING SALTBUSH - No. 5 Container	EACH	36
Salvia leucophylia PURPLE SAGE - No. 5 Container	EACH	53
Ephedra viridis MORMON TEA - No. 5 Container	EACH	69
Fallugia paradoxa APACHE PLUME - No. 5 Container	EACH	142
Eremophila 'Valentine' VALENTINE PLANT - No. 5 Container	EACH	174
'Scientific Name' CARPET ROSE - No. 5 Container	EACH	175
Daylirion wheelari DESERT SPOON - No. 5 Container	EACH	67
Gleditsia triacanthos HONEY LOCUST - 2 inch Caliper	EACH	16
Fraxinus velutina ARIZONA ASH - 2 inch Caliper	EACH	16
Chitalpa tashkentensis 'Pink Dawn' CHITALPA - 2 inch Caliper	EACH	18
Chilopsis lineraris DESERT WILLOW - 2 inch Caliper	EACH	24
TRAFFIC SIGNAL SYSTEM CONDUIT	LUMP	0
ATMS CONDUIT	LUMP	0
INSTALLATION OF STATE FURNISHED MATERIAL	LUMP	0
HIGHWAY LIGHTING SYSTEM	LUMP	0

LUMP SUM ITEMS

DESCRIPTION	LUMP	REMARKS
LANE RENTAL	0	
MOBILIZATION	0	
PUBLIC INFORMATION SERVICES	0	
TRAFFIC CONTROL	0	
SURVEY (SPECIALTY ITEM)	0	
BOUNDARY SURVEY AND SURVEY PLAT	0	
PRESSURIZED IRRIGATION SYSTEM	0	
TRAFFIC SIGNAL SYSTEM CONDUIT	0	
ATMS CONDUIT	0	
INSTALLATION OF STATE FURNISHED MATERIAL	0	
HIGHWAY LIGHTING SYSTEM	0	

UTAH DEPARTMENT OF TRANSPORTATION
REGION 4 --- RICHFIELD, UTAH
ROADWAY DESIGN

REVISIONS

NO.	DATE	DESIGN REVISION (CORR. NO.)	MAIN. AGREEMENT	PREVIOUS EDITION	REMARKS
	DATE	ORIGINAL SUBMISSION FOR AUTHORIZATION			

REVIEW
DESIGN SJO 5/02 CHECK CGM 7/03
DRAWN SJO 5/02 CHECK CGM 7/03
QUANT. SJO 5/02 CHECK CGM 7/03

APPROVAL RECOMMENDED: DATE ___ PROJECT DESIGN ENGINEER
APPROVED FOR USE BY UDOT: DATE ___ PRECONSTRUCTION ENGINEER

WASHINGTON INTERCHANGE @ RP 13
SUMMARY SHEET
PROJECT NUMBER #SP-15-1(20)13
WASHINGTON COUNTY
SHEET NO. SM-1

SUMMARY SHEET

REMOVAL SUMMARY

LINE	FROM		TO		REMOVE TREE	REMOVE GUARDRAIL	REMOVE FENCE	REMARKS
	STATION	OFFSET	STATION	OFFSET	EACH	FT	FT	
A LINE	32+00.00	LT & RT			10			
NB I-15	296+25.00	LT	296+60.00	LT			290	
NB I-15	295+43.00	RT	338+75.00	RT			4815	
SB I-15	294+80.00	LT	337+50.00	LT			4670	
SB I-15	323+48.00	LT	323+48.00	LT			180	
SB I-15	295+73.00	LT	297+27.00	LT		154		
SB I-15	295+80.00	RT	296+80.00	RT		100		
NB I-15	295+46.00	LT	296+48.00	LT		102		
NB I-15	295+22.00	RT	296+48.00	RT		126		
NB I-15	309+62.00	RT	310+76.00	RT		114		
NB I-15	309+86.00	LT	311+02.00	LT		116		
SB I-15	323+43.00	LT	325+58.00	LT		215		
SB I-15	323+50.00	RT	324+63.00	RT		113		
NB I-15	323+20.00	LT	324+60.00	LT		140		
NB I-15	323+19.00	RT	324+56.00	RT		137		
NB I-15	332+37.00	RT	335+75.00	RT		338		
NB I-15	338+88.00	RT	351+00.00	RT		1212		
NB I-15	351+00.00	RT	RP 14.51	RT		1180		
TOTAL					10	4,047	9,955	

EARTHWORK SUMMARY

LINE	STATION				LENGTH	ROADWAY EXCAVATION (Plan Quantity)	EMBANKMENT	EMBANKMENT X 10% FILL FACTOR	BORROW (Plan Quantity)	EMBANKMENT FOR BRIDGE	REMARKS
	FROM	OFFSET	TO	OFFSET	FEET	CU YD	CU YD	CU YD	CU YD	CU YD	
SB I-15	285+00.00	LT & RT	301+90.56	LT & RT	1690.56	5646	213	214	-5413		5413 CU/YD AVAILABLE FOR EMBANKMENT
A LINE	10+00.00	LT & RT	26+46.15	LT & RT	1646.15	10750	55632	9773	50445		
A LINE	27+30.15	LT & RT	45+32.36	LT & RT	1802.21	38360	11600	11604	-25600		25600 CU/YD AVAILABLE FOR EMBANKMENT
I-15 ACCESS ROAD	10+40.00	LT & RT	13+80.00	LT & RT	340.00	88	11838	80	12934		
I-15 ACCESS ROAD	13+80.00	LT & RT	16+81.00	LT & RT	301.00					36850	300 FEET PRIOR TO STRUCTURE
I-15 ACCESS ROAD	20+02.00	LT & RT	23+25.00	LT & RT	323.00					25435	300 FEET AFTER STRUCTURE
I-15 ACCESS ROAD	23+25.00	LT & RT	31+00.00	LT & RT	775.00	15763	17010	14330	2949		
B LINE	10+40.00	LT & RT	24+85.00	LT & RT	1445.00	362	49510	329	54099		
B LINE	25+63.05	LT & RT	39+55.86	LT & RT	1392.81	793	46765	721	50649		
NB I-15	333+67.24	LT & RT	351+02.00	LT & RT	1734.76	860	23680	782	25188		
SB I-15	295+00.00	RT	297+00.00	RT	200.00				290		PIPE EXTENSION
NB I-15	295+50.00	LT	297+50.00	LT	200.00				410		PIPE EXTENSION
NB I-15	295+50.00	RT	297+50.00	RT	200.00				385		PIPE EXTENSION
NB I-15	310+00.00	LT	311+50.00	LT	150.00				400		PIPE EXTENSION
SB I-15	322+50.00	RT	324+50.00	RT	200.00				660		PIPE EXTENSION
NB I-15	323+20.00	LT	325+20.00	LT	200.00				660		PIPE EXTENSION
TOTAL						72,622			168,056	62,285	

UTAH DEPARTMENT OF TRANSPORTATION
REGION 4 — RICHFIELD, UTAH
ROADWAY DESIGN

NO. | DATE | DESIGN REV. BY | MAPS CORR. BY | PARCEL & APPROVED | REQUEST BY | REMARKS
ORIGINAL SUBMISSION FOR AUTHORIZATION
DATE | REVISIONS

DESIGN SJO 5/02 | CHECK CGM 7/03 | REVIEW
DRAWN SJO 5/02 | CHECK CGM 7/03 | DATE
QUANT. SJO 5/02 | CHECK CGM 7/03 | BY

APPROVAL RECOM. DATE | PROJECT DESIGN ENGINEER
APPROVED FOR USE BY UDOT DATE | PRECONSTRUCTION ENGINEER

WASHINGTON INTERCHANGE @ RP 13
SUMMARY SHEET
PROJECT NUMBER #SP-15-1(20)13

WASHINGTON COUNTY
SHEET NO. SM-2

SUMMARY SHEET

SURFACING SUMMARY

LINE	STATION FROM	STATION OFFSET	STATION TO	STATION OFFSET	LENGTH FEET	BASE COURSES: GRANULAR BORROW AVG WIDTH (FEET)	GRANULAR BORROW DEPTH (IN)	GRANULAR BORROW VOL (YD^3)	UNTREATED BASE COURSE 3/4" OR 1" MAX AVG WIDTH (FEET)	UNTREATED BASE COURSE DEPTH (IN)	UNTREATED BASE COURSE VOL (YD^3)	LIQUID ASPHALT MC-70 OR MC-250 0.35 GAL/YD² (249 GAL/TON) TON	HOT MIX ASPHALT HMA - 3/4" (4185 LB/YD³) AVG WIDTH (FEET)	HMA DEPTH (IN)	HMA VOL (YD^3)	HMA TON	EMULSIFIED ASPHALT SS-1 (TACK COAT) 0.07 GAL/YD² (235 GAL/TON) TON	REMARKS
SB I-15	285+00.00	LT & RT	301+90.56	LT & RT	1,691	25.0	12	1,565	16.5	8.5	732	4.4	11.5	8.5	510	1,067	1.3	
A LINE	10+00.00	LT & RT	26+46.15	LT & RT	1,646	46.5	12	2,835	37.2	8.5	1,607	9.6	30.6	8.5	1,321	2,765	3.3	
A LINE	27+30.15	LT & RT	44+30.00	LT & RT	1,700	46.5	12	2,928	37.2	8.5	1,659	9.9	30.6	8.5	1,365	2,855	3.4	
I-15 ACCESS ROAD	10+40.00	LT & RT	16+81.00	LT & RT	641	78.0	12	1,852	80.4	7.5	1,193	8.0	78.0	7.5	1,157	2,422	3.3	Includes UTBC for curb & gutter
I-15 ACCESS ROAD	20+02.00	LT & RT	23+20.00	LT & RT	318	78.0	12	919	80.4	7.5	592	4.0	78.0	7.5	574	1,201	1.6	Includes UTBC for curb & gutter
I-15 ACCESS ROAD	23+20.00	LT & RT	31+66.67	LT & RT	847	—	—	—	17.0	3	133	—	—	—	—	—	~~6.6~~	
B LINE	10+40.00	LT & RT	24+85.00	LT & RT	1,445	46.5	12	2,489	37.2	8.5	1,410	8.4	30.6	8.5	1,160	2,427	2.9	
B LINE	25+63.05	LT & RT	39+55.86	LT & RT	1,393	46.5	12	2,399	37.2	8.5	1,359	8.1	30.6	8.5	1,118	2340	2.8	
NB I-15	333+67.24	LT & RT	351+02.00	LT & RT	1,735	25.0	12	1,606	16.5	8.5	751	4.5	11.5	8.5	523	1095	1.3	
NB I-15	RP 14.08	LT			63	67.0	4.5	59	48.0	6	56	0.5	45.0	4	35	73	0.1	Freeway Turn Around
TOTAL								16,651			9,492	57				16,247	20	

SURFACING SUMMARY CONTINUED

LINE	STATION FROM	OFFSET	TO	TO OFFSET	LENGTH FEET	CHIP SEAL COAT: COVER MATERIAL TYPE C AVG WIDTH (FEET)	COVER MATERIAL AREA (YD2)	EMULSIFIED ASPHALT CSS-1 (FLUSH COAT) 0.10 GAL/YD² (235 GAL/TON) TON	EMULSIFIED ASPHALT CRS-2P 0.41 GAL/YD² (239 GAL/TON) TON	REMARKS
SB I-15	285+00.00	LT & RT	301+90.56	LT & RT	1,691	10.0	1,878	0.8	3.2	
A LINE	10+00.00	LT & RT	26+46.15	LT & RT	1,646	24.0	4,390	1.9	7.5	
A LINE	27+30.15	LT & RT	45+32.36	LT & RT	1,802	24.0	4,806	2.0	8.2	
I-15 ACCESS ROAD	10+40.00	LT & RT	16+81.00	LT & RT	641	78.0	5,555	2.4	9.5	
I-15 ACCESS ROAD	20+02.00	LT & RT	23+20.00	LT & RT	318	78.0	2,756	1.2	4.7	
B LINE	10+40.00	LT & RT	24+85.00	LT & RT	1,445	24.0	3,853	1.6	6.6	
B LINE	25+63.05	LT & RT	39+55.86	LT & RT	1,393	24.0	3,714	1.6	6.4	
NB I-15	333+67.24	LT & RT	351+02.00	LT & RT	1,735	10.0	1,928	0.8	3.3	
TOTAL							28,880	*	50	

DUST CONTROL AND WATERING SUMMARY

LINE	FROM STATION	FROM OFFSET	TO STATION	TO OFFSET	LENGTH FEET	WATERING: EMBANKMENT & BORROW RATE 45.0 GAL/CU YD CU YD	1000 GAL	WATERING: GRANULAR BORROW RATE 43.0 GAL/CU YD CU YD	1000 GAL	WATERING: UNTREATED BASE COURSE RATE 43.0 GAL/CU YD CU YD	1000 GAL	DUST CONTROL: EMBANKMENT RATE 13.0 GAL/CU YD CU YD	1000 GAL	DUST CONTROL: GRANULAR BORROW RATE 12.0 GAL/CU YD CU YD	1000 GAL	DUST CONTROL: UNTREATED BASE COURSE RATE 23.0 GAL/CU YD CU YD	1000 GAL	TOTALS 1000 GAL	REMARKS
SB I-15	285+00.00	LT & RT	301+90.56	LT & RT	1691	214	9.63	1,566	67.34	732	31.48	214	2.78	1,566	18.79	732	16.84	146.85	
A LINE	10+00.00	LT & RT	26+46.15	LT & RT	1646	60218	2709.81	2,835	121.91	1,607	69.10	60218	782.83	2,835	34.02	1,607	36.96	3754.63	
A LINE	27+30.15	LT & RT	44+30.00	LT & RT	1700	11604	522.18	2,928	125.90	1,659	71.34	11604	150.85	2,928	35.14	1,659	38.16	943.57	
I-15 ACCESS RD	10+40.00	LT & RT	16+81.00	LT & RT	641	13014	585.63	1,852	79.64	1,193	51.30	13014	169.18	1,852	22.22	1,193	27.44	935.41	
I-15 ACCESS RD	20+02.00	LT & RT	23+20.00	LT & RT	318	0	0.00	911	39.17	592	25.46	0	0.00	911	10.93	592	13.62	89.18	
I-15 ACCESS RD	23+20.00	LT & RT	31+66.67	LT & RT	847	17279	777.56	—	—	972	41.80	17279	224.63	—	—	972	22.36	1066.33	
B LINE	10+40.00	LT & RT	24+85.00	LT & RT	1445	54428	2449.26	2,489	107.03	1,410	60.63	54428	707.56	2,489	29.87	1,410	32.43	3386.78	
B LINE	25+63.05	LT & RT	39+55.86	LT & RT	1393	51370	2311.65	2399	103.16	1,359	58.44	51370	667.81	2399	28.79	1,359	31.26	3201.10	
NB I-15	333+67.24	LT & RT	351+02.00	LT & RT	1735	25970	1168.65	1606	69.06	751	32.29	25970	337.61	1606	19.27	751	17.27	1644.16	
SB I-15	295+00.00	RT	324+50.00	RT	2950	860	38.70	—	—	—	—	860	11.18	—	—	—	—	49.88	PIPE EXTENSIONS
NB I-15	295+50.00	LT & RT	325+20.00	LT & RT	2970	1690	76.05	—	—	—	—	1690	21.97	—	—	—	—	98.02	PIPE EXTENSIONS
NB I-15	RP 14.08	LT			63	—	—	59	2.54	56	2.41	—	—	59	0.71	56	1.29	6.94	
																	TOTAL	15323	

UTAH DEPARTMENT OF TRANSPORTATION
REGION 4 — RICHFIELD, UTAH
ROADWAY DESIGN

DESIGN SJD 5/02 CHECK CGW 7/03
DRAWN SJD 5/02 CHECK CGW 7/03
QUANT. SJD 5/02 CHECK CGW 7/03

ORIGINAL SUBMISSION FOR AUTHORIZATION

REVISIONS

WASHINGTON INTERCHANGE @ RP 13

SUMMARY SHEET

PROJECT NUMBER #SP-15-1(20)13

WASHINGTON COUNTY

SHEET NO. SM-3

SUMMARY SHEET

TEMPORARY EROSION CONTROL SUMMARY

LINE	FROM		TO		CHECK DAM STONE	SILT FENCE	EROSION CONTROL BLANKET	REMARKS
	STATION	OFFSET	STATION	OFFSET	EACH	FEET	EACH	
SB I-15	290+75.00	LT			1			
SB I-15	290+85.00	LT			1			
SB I-15	290+95.00	LT			1			
SB I-15	292+45.00	LT			1			
SB I-15	294+00.00	LT			1			
SB I-15	297+25.00	LT			1			
SB I-15	298+90.00	LT			1			
SB I-15	300+35.00	LT			1			
SB I-15	295+80.00	LT				62.0		
SB I-15	295+85.00	RT				65.0		
NB I-15	296+40.00	LT				82.0		
NB I-15	296+45.00	RT				90.0		
A LINE	10+05.00	LT			1			
A LINE	10+55.00	LT			1			
A LINE	14+10.00	LT			1			
A LINE	14+20.00	LT			1			
A LINE	14+30.00	RT			1			
A LINE	14+40.00	LT			1			
A LINE	19+90.00	LT			1			
A LINE	20+10.00	LT			1			
A LINE	15+40.00	LT	17+90.00	LT	5			
A LINE	20+70.00	LT	22+50.00	LT	5			
B LINE	15+40.00	LT			1			
B LINE	14+80.00	RT	15+90.00	RT		148.0		
B LINE	19+60.00	RT				40.0		
A LINE	23+10.00	RT				40.0		
A LINE	24+00.00	LT			1			
A LINE	24+15.00	LT			1			
A LINE	33+90.00	LT			1			
A LINE	28+60.00	LT				30.0		
A LINE	28+95.00	RT				40.0		
A LINE	31+80.00	LT				85.0		
A LINE	31+90.00	RT				65.0		
SB I-15	323+50.00	LT				80.0		
SB I-15	323+50.00	RT				70.0		
B LINE	19+60.00	RT				40.0		
B LINE	20+35.00	LT				20.0		
B LINE	22+65.00	RT				30.0		
SUB TOTAL SHEET 1					30	987	0	

TEMPORARY EROSION CONTROL SUMMARY CONTINUED

LINE	FROM		TO		CHECK DAM STONE	SILT FENCE	EROSION CONTROL BLANKET	REMARKS
	STATION	OFFSET	STATION	OFFSET	EACH	FEET	SQ YD	
B LINE	23+35.00	LT				25.0		
B LINE	26+00.00	RT	32+00.00	RT			3,720.0	2:1 SLOPE
B LINE	26+30.00	LT	27+15.00	LT		100.0		
B LINE	29+10.00	RT				110.0		
B LINE	32+70.00	LT				75.0		
NB I-15	324+30.00	LT				80.0		
B LINE	35+55.00	RT	36+20.00	RT		70.0		
NB I-15	333+70.00	RT	334+65.00	RT		105.0		
NB I-15	338+85.00	RT	339+20.00	RT		40.0		
NB I-15	339+95.00	RT	340+90.00	RT		100.0		
A LINE	34+05.00	RT				25.0		
A LINE	35+30.00	RT			1			
A LINE	35+40.00	RT			1			
A LINE	35+50.00	RT			1			
A LINE	36+95.00	RT			1			
A LINE	38+35.00	RT			1			
A LINE	38+45.00	RT			1			
A LINE	38+55.00	RT			1	25.0		
A LINE	39+95.00	RT			1			
A LINE	31+40.00	RT			1			
A LINE	31+50.00	RT			1			
A LINE	31+60.00	RT			1			
A LINE	43+05.00	RT			1			
A LINE	44+60.00	RT			1			
NB I-15	341+85.00	RT	342+25.00	RT		60.0		
NB I-15	344+45.00	RT	344+80.00	RT		45.0		
NB I-15	345+75.00	RT	346+05.00	RT		35.0		
NB I-15	349+50.00	RT				110.0		
I-15 ACCESS ROAD	10+50.00	RT				25.0		
I-15 ACCESS ROAD	13+80.00	RT				25.0		
I-15 ACCESS ROAD	14+20.00	RT	14+75.00	RT		70.0		
I-15 ACCESS ROAD	20+40.00	LT				35.0		
I-15 ACCESS ROAD	23+35.00	LT				60.0		
I-15 ACCESS ROAD	23+90.00	RT			1			
I-15 ACCESS ROAD	25+45.00	RT			1			
I-15 ACCESS ROAD	27+00.00	LT			1			
I-15 ACCESS ROAD	29+30.00	RT			1			
I-15 ACCESS ROAD	30+75.00	RT			1			
SUB TOTAL SHEET 2					18	1220	3720	
SUB TOTAL SHEET 1					30	987		
TOTAL					48	2207	3720	

NO. | DATE | REMARKS

DESIGN REV. BY | MAPS CHKD. BY | REQUEST BY

ORIGINAL SUBMISSION FOR AUTHORIZATION

REVISIONS

DATE

UTAH DEPARTMENT OF TRANSPORTATION
REGION 4 — RICHFIELD, UTAH
ROADWAY DESIGN

DESIGN SJO 5/02 | CHECK CDW 7/03 | REVIEW

DRAWN SJO 5/02 | CHECK CDW 7/03 | DATE

QUANT. SJO 5/02 | CHECK CDW 7/03 | BY

APPROVAL RECOMM. | DATE | PROJECT DESIGN ENGINEER

APPROVED FOR USE BY DOT | DATE | PRECONSTRUCTION ENGINEER

WASHINGTON INTERCHANGE @ RP 13

SUMMARY SHEET

PROJECT NUMBER #SP-15-1(20)13

WASHINGTON COUNTY

SHEET NO. SM-4

SUMMARY SHEET

CONCRETE SUMMARY

LINE	FROM		TO		Length	CONCRETE CURB & GUTTER		REMARKS
						TYPE B1	TYPE M1	
	STATION	OFFSET	STATION	OFFSET	FEET	FEET	FEET	
I-15 ACCESS ROAD	10+40.00	39.0 LT	15+44.00	99.0 LT	526	526		UTBC for C&G is included in Surfacing Summary
I-15 ACCESS ROAD	10+40.00	39.0 RT	15+44.00	99.0 RT	538	538		UTBC for C&G is included in Surfacing Summary
I-15 ACCESS ROAD	15+68.00	99.0 RT	16+55.00	39.00 RT	134		134	UTBC for C&G is included in Surfacing Summary
I-15 ACCESS ROAD	15+68.00	99.0 LT	16+55.00	39.0 LT	134	134		UTBC for C&G is included in Surfacing Summary
I-15 ACCESS ROAD	21+94.89	39.0 LT	22+24.89	105.0 LT	85		85	UTBC for C&G is included in Surfacing Summary
I-15 ACCESS ROAD	20+28.00	39.0 RT	22+24.89	99.0 RT	244	244		UTBC for C&G is included in Surfacing Summary
I-15 ACCESS ROAD	22+50.00	105.0 LT	23+30.00	44.6 LT	104	104		UTBC for C&G is included in Surfacing Summary
I-15 ACCESS ROAD	22+50.00	99.0 RT	23+30.00	38.6 RT	104	104		UTBC for C&G is included in Surfacing Summary
TOTAL						1,650	219	

BARRIER SUMMARY SHEET

LINE	FROM		TO		BEAM GUARDRAIL	GUARDRAIL TRANSITION ELEMENTS	PRECAST CONCRETE BARRIER	CRASH CUSHION TYPE B	CRASH CUSHION TYPE G	CRASH CUSHION TYPE H	REMARKS
	STATION	OFFSET	STATION	OFFSET	FEET	EACH	FEET	EACH	EACH	EACH	
NB I-15	348+25.00	RT	348+75.00	RT					1		
NB I-15	348+75.00	RT	RP 14.51	RT	2925						
I-15 ACCESS ROAD	15+92.00	RT	16+30.00	RT						1	
I-15 ACCESS ROAD	16+30.00	RT	16+80.00	RT	25	1					
I-15 ACCESS ROAD	20+28.00	LT	21+28.00	LT			100				
I-15 ACCESS ROAD	21+28.00	LT	21+43.00	LT				1			
TOTAL					2,950	1	100	1	1	1	

CATCH BASIN SUMMARY

LINE			SMALL STRUCTURES									REMARKS
	STATION	OFFSET	DRAWING #	TABLE	LINE	COLUMN	CONCRETE SMALL STRUCTURE	REINFORCING STEEL - COATED	RECTANGULAR GRATE & FRAME Std Dwg GF3	GRATE & FRAME Std Dwg GF3 (BICYCLE SAFE)	MANHOLE STEPS Std Dwg GF 6	
							CU YD(S)	POUNDS	EACH	EACH	EACH	
"A" LINE	14+20.00	26.50 RT	CB 6D	1	1		3.46	437.00	1			
"B" LINE	15+00.00	24.00 LT	CB 6D	1	1		3.46	437.00	1			
I-15 ACCESS ROAD	10+50.00	41.00 LT	CB 2		5		1.07	129.40		1		
I-15 ACCESS ROAD	10+50.00	41.00 RT	CB 2		4		0.97	123.20		1		
I-15 ACCESS ROAD	13+80.00	41.00 LT	CB 2		4		0.97	123.20		1		
I-15 ACCESS ROAD	13+80.00	41.00 RT	CB 10C		10	A	2.55	319.00		1	5	Manhole Steps included in Concrete Small Structure Item
I-15 ACCESS ROAD	16+00.00	41.00 LT	CB 2		5		1.10	129.40		1		
I-15 ACCESS ROAD	16+00.00	41.00 RT	CB 2		7		1.35	156.00		1		
I-15 ACCESS ROAD	20+40.00	41.00 LT	CB 2		6		1.18	149.80		1		
I-15 ACCESS ROAD	20+40.00	41.00 RT	CB 2		4		0.97	123.20		1		
I-15 ACCESS ROAD	23+15.00	47.00 LT	CB 2		6		1.18	149.80		1		
I-15 ACCESS ROAD	23+15.00	41.00 RT	CB 2		4		0.97	123.20		1		
TOTAL							19	2,400	2	10	-	

UTAH DEPARTMENT OF TRANSPORTATION
-- RICHFIELD, UTAH
REGION 4
ROADWAY DESIGN

WASHINGTON INTERCHANGE @ RP 13
SUMMARY SHEET

PROJECT NUMBER #SP-15-1(20)13

WASHINGTON COUNTY

SHEET NO. SM-5

REVIEW
CHECK CGM 7/03 DATE
CHECK CGM 7/03 DATE
CHECK CGM 7/03 BY

APPROVAL RECOMM. — PROJECT DESIGN ENGINEER — DATE
APPROVED FOR USE BY UDOT — PRECONSTRUCTION ENGINEER — DATE

DESIGN S.J.O. 5/02
DRAWN S.J.O. 5/02
QUANT. S.J.O. 5/02

NO.	DATE	REMARKS
		DESIGN MAPS REVISED CENTERLINE, PARCELS, RETAINING WALLS
		ORIGINAL SUBMISSION FOR AUTHORIZATION

REVISIONS
DATE

SUMMARY SHEET

PIPE CULVERT SUMMARY

LINE	FROM		TO		PIPE CULVERT							CULVERT END SECTION				REMARKS
	STATION	OFFSET	STATION	OFFSET	PIPE CULVERT	PIPE CULVERT	PIPE CULVERT	PIPE CULVERT	PIPE CULVERT	CORRUGATED POLYETHYLENE (HDPE) PIPE CULVERT	STRUCTURAL STEEL PLATE PIPE CULVERT	12 INCH	18 INCH	24 INCH	30 INCH	
					CLASS C	CLASS C	CLASS C	CLASS C	CLASS C	CLASS C	CLASS E					
					18 INCH	24 INCH	30 INCH	54 INCH	72 INCH	12 INCH	72 INCH					
					FEET	FEET	FEET	FEET	FEET	FEET	FEET	EA	EA	EA	EA	
SB I-15	287+37.00	40.00 LT				5.00								1		
SB I-15	290+83.24	37.56 LT				10.00								1		
SB I-15	295+81.85	28.12 LT									28.00					
SB I-15	295+86.68	35.38 RT									10.00					
NB I-15	296+42.00	25.30 LT									20.00					
NB I-15	296+43.93	38.32 RT									10.00					
A LINE	10+33.00	5.12 LT					22.00								1	
A LINE	14+20.00	26.50 RT	14+20.00	20.00 LT		47.00								1		
A LINE	18+95.08	71.76 RT	19+96.22	83.33 LT					185.00							
B LINE	15+00.00	24.00 RT	15+00.00	70.00 RT		94.00								1		
NB I-15	310+95.00	40.00 LT						16.00								
NB I-15	310+70.00	50.50 RT						76.00								
A LINE	23+09.46	104.41 RT	24+06.35	96.31 LT		214.00								2		
A LINE	28+60.32	61.16 LT	28+93.37	64.69 RT		130.00								2		
B LINE	19+61.35	85.62 RT	20+25.00	76.32 LT		174.00								2		
B LINE	22+66.81	114.54 RT	23+34.73	89.19 LT		215.00								2		
B LINE	26+97.98	95.30 LT	27+72.69	101.10 RT		209.00								2		
B LINE	32+89.60	33.21 LT	32+74.16	35.07 RT		70.00								1		
A LINE	35+07.42	61.91 RT	35+38.52	22.46 LT		90.00								2		
A LINE	38+43.74	24.61 LT	38+56.08	45.30 RT		71.00								2		
A LINE	41+40.76	9.62 RT				30.00								1		
B LINE	37+38.06	42.41 RT				26.00								1		
NB I-15	334+48.60	51.84 RT				60.00								1		
NB I-15	340+51.68	58.69 RT				57.00								1		
NB I-15	349+59.04	64.26 RT				40.00								1		
NB I-15	RP 14.08	LT				130.00								2		(see sheet DT-4)
I-15 ACCESS RD	10+50.00	39.50 RT	10+50.00	39.50 LT	79.00											
I-15 ACCESS RD	10+50.00	41.0 LT	10+50.00	71.0 LT	30.00								1			
I-15 ACCESS RD	13+80.00	39.50 RT	13+80.00	39.50 LT	79.00											
I-15 ACCESS RD	13+80.00	41.00 RT	13+80.00	120.00 RT	80.00								1			
I-15 ACCESS RD	16+00.00	39.50 RT	16+00.00	39.50 LT	79.00											
I-15 ACCESS RD	16+00.00	41.00 RT	16+29.35	113.77 RT	82.00								1			
I-15 ACCESS RD	16+58.00	41.00 LT	16+58.00	161.00 LT						120.00		1				
I-15 ACCESS RD	16+58.00	41.00 RT	16+58.00	140.00 RT						100.00		1				
I-15 ACCESS RD	20+40.00	39.50 RT	20+40.00	39.50 LT	79.00											
I-15 ACCESS RD	20+40.00	41.00 LT	20+40.00	105.00 LT	65.00								1			
I-15 ACCESS RD	23+15.00	39.00 RT	23+15.00	45.00 LT	84.00											
I-15 ACCESS RD	23+15.00	47.00 LT	23+33.27	124.00 LT	80.00								1			
I-15 ACCESS RD	29+44.30	97.98 LT	30+62.27	83.30 RT					215.00							
TOTAL					737	1,672	22	92	400	220	68	2	5	26	1	

NO. | DATE | DESIGN REVISION | MAPS CORR. OR REVISION | PARCELS REQUIRED | BY | REMARKS

ORIGINAL SUBMISSION FOR AUTHORIZATION

DATE

REVISIONS

UTAH DEPARTMENT OF TRANSPORTATION
REGION 4 — RICHFIELD, UTAH
ROADWAY DESIGN

REVIEW

DESIGN SJO 5/02 | CHECK CGW 1/03 | DATE | BY

DRAWN SJO 5/02 | CHECK CGW 1/03 | DATE | BY

QUANT. SJO 5/02 | CHECK CGW 1/03 | DATE | BY

APPROVAL RECOMM. | PROJECT DESIGN ENGINEER | DATE

APPROVED FOR USE BY UDOT | PRECONSTRUCTION ENGINEER | DATE

WASHINGTON INTERCHANGE @ RP 13

SUMMARY SHEET

PROJECT NUMBER *SP-15-1(20)13

WASHINGTON COUNTY

SHEET NO. SM-6

SUMMARY SHEET

DELINEATOR SUMMARY

LINE	FROM		TO		TYPE II	CULVERT MARKER	FREEWAY TURN AROUND	REMARKS
	STATION	OFFSET	STATION	OFFSET	EA	EA	EA	
SB I-15	285+00.00	LT	301+90.56	LT	16	3		
A LINE	10+00.00	LT	25+86.15	LT	16	4		
A LINE	15+40.00	RT	25+86.15	RT	10	4		
A LINE	27+90.15	LT	44+10.00	LT	16	4		
A LINE	27+90.15	RT	38+90.00	RT	11	3		
B LINE	17+80.00	LT	24+25.05	LT	7	2		
B LINE	10+60.00	RT	24+25.05	RT	14	4		
B LINE	26+23.05	LT	32+50.00	LT	6	1		
B LINE	26+23.05	RT	39+55.86	RT	14	3		
NB I-15	333+67.24	RT	351+01.95	RT	17	3		
NB I-15	RP 13.92	LT	RP 14.06	LT	1		3	
NB I-15	RP 14.23	RT	RP 14.06	RT	1		3	
TOTAL					129	31	6	

RIGHT-OF-WAY MARKERS

LINE	NUMBER	STATION	OFFSET	PROJECT COORDINATES		RIGHT-OF-WAY MARKERS	REMARKS
				NORTHING	EASTING	EACH	
I-15 NB	RM-1	311+00.00	200.00 RT	199,754.4279	100,142.2165	1	
I-15 NB	RM-2	325+50.00	200.00 RT	200,549.5301	101,410.1527	1	
I-15 ACCESS RD	RM-3	13+33.79	145.00 RT	200,094.2607	101,175.6911	1	
I-15 ACCESS RD	RM-4	9+24.85	100.00 RT	199,662.8467	101,277.0750	1	
I-15 ACCESS RD	RM-5	9+24.85	100.00 LT	199,608.7200	101,084.5385	1	
I-15 ACCESS RD	RM-6	13+62.76	115.00 LT	199,985.3502	100,937.8145	1	
I-15 SB	RM-7	306+00.00	200.00 LT	200,117.1474	99,507.0467	1	
A LINE	RM-8	19+00.00	105.00 LT	200,341.4778	99,890.0934	1	
I-15 ACCESS RD	RM-9	23+92.88	145.00 LT	200,827.0758	100,347.1052	1	
I-15 ACCESS RD	RM-10	25+47.20	145.00 LT	200,955.9171	100,262.1663	1	
I-15 ACCESS RD	RM-11	31+66.67	145.00 LT	201,202.4998	99,855.8629	1	
I-15 ACCESS RD	RM-12	31+66.67	110.00 RT	201,490.9628	99,885.6802	1	
I-15 ACCESS RD	RM-13	25+47.20	110.00 RT	201,115.5352	100,504.2863	1	
I-15 ACCESS RD	RM-14	23+32.88	110.00 RT	200,936.6007	100,622.2491	1	
I-15 SB	RM-15	330+78.13	200.00 LT	201,397.0327	101,505.3213	1	
TOTAL						15	

REVISIONS

NO.	DATE	REVISION MADE BY	PARTIAL RELEASE APPROVED BY	REMARKS
		ORIGINAL SUBMISSION FOR AUTHORIZATION		

UTAH DEPARTMENT OF TRANSPORTATION
REGION 4 — RICHFIELD, UTAH
ROADWAY DESIGN

	REVIEW	DESIGN SJO 5/02	CHECK CDM 7/03
DATE		DRAWN SJO 5/02	CHECK CDM 7/03
BY		QUANT. SJO 5/02	CHECK CDM 7/03

APPROVAL RECOMMD. — DATE — PROJECT DESIGN ENGINEER
APPROVED FOR LETTING BY — DATE — PRECONSTRUCTION ENGINEER

WASHINGTON INTERCHANGE @ RP 13
SUMMARY SHEET

PROJECT NUMBER #SP-15-1(20)13

WASHINGTON COUNTY

SHEET NO. SM-7

SUMMARY SHEET

SIGN SUMMARY

SIGN #	LINE	STATION	OFFSET	SIGN DESCRIPTION	SIGN CODE	SIGN BASE AND FACE MATERIAL TYPE P-2 36 X 36 EACH	SIGN BASE AND FACE MATERIAL TYPE P-2 48 X 48 EACH	SIGN TYPE P-2 SQ FT	AUXILIARY P-2 SQ FT	SIGN COLOR	POSTS TIMBER EA	POSTS SQ STEEL EA	POST DIMENSION	SIGN FOUNDATION	RELOCATION OF SIGN	REMARKS
	I-15 NB	R.P. 12.11	26.00 RT	Washington Exit 1 Mile	N			160		W/G		2	W12x19	2		E1-2
	I-15 NB	R.P. 12.61	26.00 RT	Washington Exit 1/2 Mile	N			160		W/G		2	W12x19	2		E1-2
	I-15 SB	276+50.00	28.00 LT	Speed Limit 75	N			20		BK/W	2		4 x 6			R2-1
	I-15 SB	286+50.00	28.00 LT	Route Marker South I-15	N	1			3.1	W/BL	1		6 x 8			M1-1(15), M3-3
	I-15 SB	293+16.00	38.00 LT	Camping - Exit 10	R									2	1	move South of project limits
	I-15 SB	298+75.00	28.00 LT	Mile Marker 13	R										1	move 8 ft to left
	I-15 SB	301+25.60	38.00 LT	Food - Exit 10	R									2	1	move South of project limits
	I-15 SB	301+50.00	38.00 LT	Lane Drop	N		1			BK/Y	2		4 x 6			W4-2R(a)
	"B" LINE	010+00.00	16.00 RT	Exit 13 Washington	N			128		W/G		2	S8x18.4	2		E6-2
	I-15 SB	305+50.00	28.00 LT	Merge	N		1			BK/Y	2		4 x 6			W4-1r
	"B" LINE	015+00.00	24.00 LT	Exit 13	N			30		W/G		2	S4x9.5	2		E5-1a
	"B" LINE	017+00.00	12.00 RT	Stop Ahead	N		1			BK/Y	2		4 x 6			W3-1a
	"A" LINE	027+60.00	22.00 LT	Stop	N		1			W/R	2		4 x 6			R1-1a
	"A" LINE	027+60.00	22 LT & 24 RT	Do Not Enter (2)	N		2			W/R	4		4 x 6			R5-1
	"A" LINE	029+60.00	22 LT & 24 RT	Wrong Way (2)	N			17.5		W/R	1		4 x 6			R5-1a
	"A" LINE	031+00.00	20.00 LT	Washington City (left)	N			8		W/G	2		4 x 4			D1-1
	"B" LINE	020+50.00	24.00 RT	Washington City (left)	N			8		W/G	2		4 x 4			D1-1
	"B" LINE	022+55.00	22 LT & 24 RT	Wrong Way (2)	N			17.5		W/R	1		4 x 6			R5-1a
	"B" LINE	024+55.00	22 LT & 24 RT	Do Not Enter (2)	N		2			W/R	4		4 x 6			R5-1
	"B" LINE	024+55.00	24.00 RT	Stop	N		1			W/R	2		4 x 6			R1-1a
	I-15 NB	327+90.00	28.00 RT	Merge	N		1			BK/Y	2		4 x 6			W4-1r
	"A" LINE	035+00.00	12.00 LT	Stop Ahead	N		1			BK/Y	2		4 x 6			W3-1a
	"A" LINE	040+60.00	24.00 RT	Exit 13	N			30		W/G		2	S4x9.5	2		E5-1a
	"A" LINE	045+00.00	16.00 LT	Exit 13 Washington	N			128		W/G		2	S8x18.4	2		E6-2
	I-15 NB	334+00.00	38.00 RT	Lane Drop	N		1			BK/Y	2		4 x 6			W4-2R(a)
	I-15 NB	351+95.00	28.00 RT	Mile Marker 14	R										1	move 8 ft to right
	I-15 NB	353+00.00	28.00 RT	Route Marker South I-15	N	1			3.1	W/BL	1		6 x 8			M1-1(15), M3-3
	I-15 NB	362+00.00	28.00 RT	Speed Limit 75	N			20		BK/W	2		4 x 6			R2-1
	I-15 SB	R.P. 14.25	28.00 LT	Washington Exit 1/2 Mile	N			160		W/G		2	W12x19	2		E1-2
	I-15 SB	R.P. 14.75	28.00 LT	Washington Exit 1 Mile	N			160		W/G		2	W12x19	2		E1-2
	I-15 ACCES	013+25.00	45.00 RT	Location Destination	N			24		W/G	2		4 x 6			D1-3
	I-15 ACCES	014+95.00	45.00 RT	Route Marker South I-15	N	1			5.3	W/BL	1		6 x 8			M1-1(15), M3-3, M6-3
	I-15 ACCES	014+95.00	47.00 RT	Route Marker North I-15	N	1			5.3	W/BL	1		6 x 8			M1-1(15), M3-3, M6-3
	I-15 ACCES	015+95.00	49.00 LT	One Way (2)	N			6		W/BK	1		4 x 6			R6-1L
	I-15 ACCES	016+50.00	49.00 LT	I-15 North Cedar City	N			32		W/G	3		4 x 6			E6-2a
	I-15 ACCES	021+60.00	45.00 RT	I-15 South St. George	N			32		W/G	1		4 x 6			E6-2a
	I-15 ACCES	022+00.00	45.00 RT	One Way	N			3		W/BK	3		4 x 6			R6-1L
TOTAL						4	12	1144	17		-	-		20	4	

SIGNING KEY

SIGN COLOR

W = WHITE BK = BLACK
G = GREEN Y = YELLOW
BL = BLUE R = RED
BR = BROWN

SIGN CODE

R =RELOCATION
N = NEW SIGN
AUX = AUXILIARY SIGN

NOTES:

SEE STANDARD DRAWING SN 12A FOR FOUNDATION DETAILS

REVISIONS

NO.	DATE	DESIGN REV. BY	MAPS CORR. BY	PARCELS APPROVED	REQUEST BY	REMARKS
						ORIGINAL SUBMISSION FOR AUTHORIZATION
	DATE					

UTAH DEPARTMENT OF TRANSPORTATION
REGION 4 — RICHFIELD, UTAH
ROADWAY DESIGN

CHECK CGW 7/03	REVIEW	DESIGN SJG 5/02	CHECK CGW 5/02
CHECK CGW 7/03	DATE	DRAWN SJG 5/02	CHECK CGW 5/02
CHECK CGW 7/03	BY	QUANT. SJG 5/02	CHECK CGW 5/02

APPROVAL RECOMM. DATE PROJECT DESIGN ENGINEER
APPROVED FOR UDOT DATE PRECONSTRUCTION ENGINEER

WASHINGTON INTERCHANGE @ RP 13
SUMMARY SHEET
PROJECT NUMBER #SP-15-1(20)13
WASHINGTON COUNTY
SHEET NO. SM-8

SUMMARY SHEET

PAVEMENT MARKING PAINT SUMMARY

LINE	FROM		TO		4" WHITE 190 FT/GAL SOLID		4" WHITE 760 FT/GAL BROKEN		4" YELLOW 190 FT/GAL SOLID		4" YELLOW 95 FT/GAL DOUBLE SOLID		8" WHITE 95 FT/GAL SOLID		8" WHITE 380 FT/GAL DOTTED		PAVEMENT MESSAGE	REMARKS
	STATION	OFFSET	STATION	OFFSET	FEET	GAL.	FEET	GAL.	FEET	GAL.	FEET	GAL.	FEET	GAL.	FEET	GAL.	EACH	
SB I-15	285+00.00	LT & RT	296+00.00	LT & RT	1100.00	5.79	1100.00	1.45	1100.00	5.79								
SB I-15	296+00.00	LT & RT	301+90.56	LT & RT	590.56	3.11	590.56	0.78	590.56	3.11					590.56	1.55		
SB I-15	301+90.56	LT & RT	304+76.00	LT & RT					285.44	1.50			215.00	2.26	69.44	0.18		
SB I-15	304+76.00	LT & RT	333+60.00	LT & RT	2884.00	15.18	2884.00	3.79	2884.00	15.18								
SB I-15	333+60.00	LT & RT	337+50.00	LT & RT			390.00	0.51	390.00	2.05			128.00	1.35				
SB I-15	337+50.00	LT & RT	350+45.24	LT & RT	1295.24	6.82	1295.24	1.70	1295.24	6.82								
A LINE	10+00.00	LT & RT	12+85.00	LT & RT	285.00	1.50			285.00	1.50			215.00	2.26				
A LINE	12+85.00	LT & RT	26+20.00	LT & RT	1335.00	7.03			1335.0	7.03								
A LINE	27+60.00	LT & RT	41+44.00	LT & RT	1384.00	7.28			1384.0	7.28								
A LINE	41+44.00	LT & RT	45+32.36	LT & RT	388.36	2.04				0.00			128.00	1.35	230.00	0.61		
NB I-15	285+01.64	LT & RT	304+96.90	LT & RT	1995.26	10.50	1995.26	2.63	1995.26	10.50				0.00				
NB I-15	304+96.90	LT & RT	308+90.00	LT & RT			393.10	0.52	393.10	2.07			190.00	2.00				
NB I-15	308+90.00	LT & RT	329+05.00	LT & RT	2015.00	10.61	2015.00	2.65	2015.00	10.61								
NB I-15	329+05.00	LT & RT	333+67.24	LT & RT			462.24	0.61	462.24	2.43			300.00	3.16	177.00	0.47		
NB I-15	333+67.24	LT & RT	340+00.00	LT & RT	632.76	3.33	632.76	0.83	632.76	3.33					423.00	1.11		
NB I-15	340+00.00	LT & RT	351+80.54	LT & RT	1180.54	6.21	1180.54	1.55	1180.54	6.21								
B LINE	10+00.00	LT & RT	13+90.00	LT & RT	390.00	2.05				0.00			190.00	2.00	200.00	0.53		
B LINE	13+90.00	LT & RT	24+55.00	LT & RT	1065.00	5.61			1065.0	5.61								
B LINE	25+90.00	LT & RT	34+90.00	LT & RT	900.00	4.74			900.00	4.74								
B LINE	34+90.00	LT & RT	39+55.86	LT & RT	465.86	2.45							300.00	3.16				
I-15 ACCESS ROAD	10+40.00	LT	14+95.00	LT	455.00	2.39	455.00	0.60			455.00	4.79						
I-15 ACCESS ROAD	10+40.00	RT	14+95.00	RT	455.00	2.39	455.00	0.60			455.00	4.79						
I-15 ACCESS ROAD	15+64.00	LT	21+95.00	LT	631.00	3.32	631.00	0.83			391.00	4.12	100.00	1.05				
I-15 ACCESS ROAD	15+64.00	RT	21+95.00	RT	631.00	3.32	631.00	0.83			341.00	3.59	150.00	1.58				
I-15 ACCESS ROAD	14+95.00	LT	15+64.00	LT	80.00	0.42												
I-15 ACCESS ROAD	14+95.00	RT	15+64.00	RT	80.00	0.42												
I-15 ACCESS ROAD	21+95.00	LT	23+11.00	LT	140.00	0.74												
I-15 ACCESS ROAD	21+95.00	RT	23+11.00	RT	140.00	0.74												
A LINE	27+60.00	LT & RT															1	STOP BAR
B LINE	24+55.00	LT & RT															1	STOP BAR
I-15 ACCESS ROAD	16+08.00	CL															1	TURN ARROW
I-15 ACCESS ROAD	16+88.00	CL															1	TURN ARROW
I-15 ACCESS ROAD	20+55.00	CL															1	TURN ARROW
I-15 ACCESS ROAD	21+90.00	CL															1	TURN ARROW
SUB TOTAL						107.99		19.88		95.75		17.28		20.17		4.45	6	
TOTAL										266							6	

DITCH AND RIP RAP SUMMARY

LINE	FROM		TO		SMALL DITCH EXCAVATION	SURFACE DITCH	LOOSE RIPRAP AREA	LOOSE RIPRAP DEPTH	LOOSE RIPRAP VOLUME	GEOTEXTILES - EROSION CONTROL	REMARKS
	STATION	OFFSET	STATION	OFFSET	CU YD	FT	SQ FT	FT	CU YD	SQ YD	
SB I-15	287+50.00	LT	301+90.56	LT		1441					
SB I-15	295+86.68	RT					304.5	3	33.8	33.8	
NB I-15	296+43.93	RT					304.5	3	33.8	33.8	
A LINE	10+00.00	LT	17+50.00	LT		750					
A LINE	18+95.08	RT					304.5	3	33.8	33.8	
B LINE	15+64.82	RT					231.0	3	25.7	25.7	
A LINE	30+00.00	LT	31+50.00	LT		150					
A LINE	31+84.70	RT					2140.8	3	237.9	237.9	
SB I-15	323+48.56	RT					397.5	3	44.2	44.2	
B LINE	29+15.00	RT					808.2	3	89.8	89.8	
A LINE	32+00.00	LT	45+32.36	LT		1332					
A LINE	35+06.00	RT	34+91.00	RT	75						
NB I-15	333+53.00	RT	334+48.00	RT	137						
NB I-15	340+41.00	RT	341+03.00	RT	51						
I-15 ACCESS RD	29+44.30	LT					304.5	3	33.8	33.8	
TOTAL					263	3,673			533	533	

UTAH DEPARTMENT OF TRANSPORTATION
REGION 4 — RICHFIELD, UTAH
ROADWAY DESIGN

WASHINGTON INTERCHANGE @ RP 13
SUMMARY SHEET
PROJECT NUMBER #SP-15-1(20)13

WASHINGTON COUNTY

SHEET NO. SM-9

REVIEW
DESIGN SJO 5/02 CHECK CGH 7/03
DRAWN SJO 5/02 CHECK CGH 7/03
QUANT. SJO 5/02 CHECK CGH 7/03

APPROVED FOR USE BY UDOT — DATE
PRECONSTRUCTION ENGINEER
APPROVAL RECOMM. — DATE
PROJECT DESIGN ENGINEER

REVISIONS

NO.	DATE	REVISION	BY	REMARKS
		ORIGINAL SUBMISSION FOR AUTHORIZATION		

SUMMARY SHEET

LANDSCAPING (PLANTING) SUMMARY

SHEET / LINE	FROM		TO		MEXICAN REDBUD Cercis canadensis	CREOSOTE Larrea tridentate	SHRUB LIVE OAK Quercus turbinella	FOURWING SALTBUSH Atriplex canescens	PURPLE SAGE Salvia leucophylia	MORMON TEA Ephedra viridis	HONEY LOCUST Gleditsia triacanthos	ARIZONA ASH Fraxinus velutina	CHITALPA Chitalpa tashkentensis 'Pink dawn'	DESERT WILLOW Chilopsis lineraris	REMARKS
	STATION	OFFSET	STATION	OFFSET	5 Gal.	5 Gal.	5 Gal.	5 Gal.	5 Gal.	5 Gal.	2" Cal.	2" Cal.	2" Cal.	2" Cal.	
LS-5 / "A"-LINE	20+00	RT	23+00	RT	2	6	5	15	11	18	2	3	4	3	
LS-6 / "A"-LINE	23+00	RT	26+00	RT	5	11	16	8	12	16	3	5	2	2	
LS-7 / "A"-LINE	28+00	RT	32+00	RT	15	0	13	7	9	11	4	3	2	5	
LS-8 / "A"-LINE	32+00	RT	36+00	RT	9	0	3	0	5	8	1	3	2	6	
LS-9 / "B"-LINE	18+00	LT	22+00	LT	9	0	0	0	6	6	1	0	1	2	
LS-10 / "B"-LINE	22+00	LT	24+00	LT	5	0	0	0	4	4	2	0	1	2	
LS-11 / "B"-LINE	26+00	LT/RT	30+50	LT/RT	16	2	8	6	6	6	3	1	4	3	
LS-12 / "B"-LINE	30+50	LT	32+00	LT	4	0	8	0	0	0	0	1	2	1	
TOTAL					65	19	53	36	53	69	16	16	18	24	

LANDSCAPING (PLANTING) SUMMARY (continued)

SHEET	FROM		TO		APACHE PLUME Fallugia paradoxa	VALENTINE PLANT Eremophila 'Valentine'	CARPET ROSE	DESERT SPOON Dayilrion wheelari	REMARKS
	STATION	OFFSET	STATION	OFFSET	5 Gal.	5 Gal.	5 Gal.	5 Gal.	
LS-5 / "A"-LINE	20+00	RT	23+00	RT	14	26	16	13	
LS-6 / "A"-LINE	23+00	RT	26+00	RT	28	37	42	6	
LS-7 / "A"-LINE	28+00	RT	32+00	RT	30	38	48	14	
LS-8 / "A"-LINE	32+00	RT	36+00	RT	17	23	19	0	
LS-9 / "B"-LINE	18+00	LT	22+00	LT	5	14	13	14	
LS-10 / "B"-LINE	22+00	LT	24+00	LT	11	10	12	6	
LS-11 / "B"-LINE	26+00	LT/RT	30+50	LT/RT	27	26	25	7	
LS-12 / "B"-LINE	30+50	LT	32+00	LT	10	0	0	7	
TOTAL					142	174	175	67	

ROCK MULCH & SEEDING SUMMARY

LINE	FROM		TO		COBBLE STONE	RIVER ROCK (RED)	RIVER ROCK (GRAY)	CONCRETE EDGING	ALUMINUM EDGING	BROADCAST SEED (WILDFLOWER MIX)	DRILL SEED (ROADSIDE MIX)	BROADCAST SEED (ROADSIDE MIX)	WOOD FIBER MULCH	STRIP, STOCKPILE AND SPREAD TOPSOIL	REMARKS
	STATION	OFFSET	STATION	OFFSET	SQ FT	SQ FT	SQ FT	LF	LF	ACRE	ACRE	ACRE	ACRE	SQ YD	
A LINE	13+25	RT	26+50	RT	76712	43348	40178	1905	1007						
A LINE	27+50	RT	41+00	RT	52652	36006	20400	2544	1361	8.50			8.50		
B LINE	14+50	LT	24+75	LT	43285	15461	16729	698	1032	1.00			1.00		
B LINE	25+50	LT	34+50	LT	32360	41858	9374	491	1068						
I-15 SB	285+00.00	LT	301+90.56	LT							1.90		1.90	9200	
A LINE	10+00	LT	20+00	LT							1.51		1.51	7308	
A LINE	20+00	LT	35+00	LT								2.21	2.21	10696	
A LINE	35+00	LT	45+32.36	LT								1.61	1.61	7792	
B LINE	10+00	RT	20+00	RT							1.19		1.19	5760	
B LINE	20+00	RT	30+00	RT								1.95	1.95	9438	
B LINE	30+00	RT	39+56	RT							1.17		1.17	8228	
I-15 NB	333+67.24	RT	351+80.54	RT							3.36		3.36	16262	
I-15 ACCESS	10+00	LT	13+00	LT							0.47		0.47	2275	
I-15 ACCESS	10+00	RT	13+00	RT							0.58		0.58	2807	
I-15 ACCESS	23+00	LT	31+00	LT								1.43	1.43	6921	
I-15 ACCESS	23+00	RT	31+00	RT								1.66	1.66	7938	
RP 14.08	LT											0.13	0.13		
TOTAL					205,009	136,673	86,681	5,638	4,468	10	10	9	29	94,626	

REVISIONS

NO.	DATE	DESIGN REV. BY	MAPS CORR. BY	PARCELS AFFECTED	REQUEST BY	REMARKS
						ORIGINAL SUBMISSION FOR AUTHORIZATION
	DATE					

UTAH DEPARTMENT OF TRANSPORTATION
REGION 4 — RICHFIELD, UTAH
ROADWAY DESIGN

DESIGN SJO 5/02	CHECK CDW 7/03	REVIEW	
DRAWN SJO 5/02	CHECK CDW 7/03	DATE	
QUANT. SJO 5/02	CHECK CDW 7/03	BY	

APPROVAL RECOMM. — DATE — PROJECT DESIGN ENGINEER
APPROVED FOR USE BY UDOT — DATE — PRECONSTRUCTION ENGINEER

WASHINGTON INTERCHANGE @ RP 13
SUMMARY SHEET
PROJECT NUMBER #SP-15-1(20)13

WASHINGTON COUNTY

SHEET NO. SM-10

SUMMARY SHEET

SEED SCHEDULE - ROAD MIX

GRASSES/FORBS	SEED NAME			NUMBER OF SEEDS PER POUND	QUANTITY					
					POUNDS OF PURE LIVE SEED PER ACRE	% OF MIX	SEEDS/ SQ. YD.	POUNDS OF PURE LIVE SEED PER ACRE	% OF MIX	SEEDS/ SQ. YD.
	SEED NO.	COMMON NAME	BOTANICAL NAME		DRILL			BROADCAST		
G	1	Sand dropseed	Sporobolus cryptandrus	5,298,000	1.00	9.09%	1309	1.50	9.09%	1964
G	2	Indian ricegrass 'Nezpar'	Achnatherum hymenoides 'Nezpar'	141,000	3.50	31.82%	122	5.25	31.82%	183
G	3	Newhy hybrid wheatgrass	Elymus hoffmanii	122,000	3.50	31.82%	106	5.25	31.82%	158
F	4	Desert globemallow	Sphaeraicea ambigua	500,000	1.00	9.09%	124	1.50	9.09%	185
F	5	Blue flax	Linum lewisii	293,000	2.00	18.18%	145	3.00	18.18%	217
TOTAL POUNDS OF PURE LIVE SEED PER ACRE					11.00	100%	1805	16.50	100%	2707

SEED SCHEDULE - WILDFLOWER MIX

GRASSES/FORBS	SEED NAME			NUMBER OF SEEDS PER POUND	QUANTITY					
					POUNDS OF PURE LIVE SEED PER ACRE	% OF MIX	SEEDS/ SQ. YD.	POUNDS OF PURE LIVE SEED PER ACRE	% OF MIX	SEEDS/ SQ. YD.
	SEED NO.	COMMON NAME	BOTANICAL NAME		DRILL			BROADCAST		
F	1	African Daisy	Dimorphotheca sinuata	251,000	2.00	19.05%	124	3.00	19.05%	186
F	2	California Poppy	Eschscholtzia californica	293,000	2.00	19.05%	145	3.00	19.05%	217
F	3	Desert Verbena	Verbena goodingii	482,800	1.00	9.52%	119	1.50	9.52%	179
F	4	Blue Flax	Linum lewisii	293,000	2.00	19.05%	145	3.00	19.05%	217
F	5	Early Indian Paintbrush	Castilleja chromosa	4,900,000	0.50	4.76%	605	0.75	4.76%	908
F	6	Desert Globemallow	Sphaeralcea ambigua	500,000	1.00	9.52%	124	1.50	9.52%	185
G	7	Side Oats Gramma	Bouteloua curtipendula	191,000	1.00	9.52%	47	1.50	9.52%	71
G	8	Indian Rice Grass	Achnatherum hymenoides	141,000	1.00	9.52%	35	1.50	9.52%	52
TOTAL POUNDS OF PURE LIVE SEED PER ACRE					10.50	100%	1344	15.75	100%	2016

FENCING SUMMARY

LINE	FROM		TO		RIGHT OF WAY FENCE AND GATE				ENVIRONMENTAL FENCE	REMARKS
					METAL POST TYPE B	GATE 12 FT	R/W BRACE POST	TORTOISE FENCE		
	STATION	OFFSET	STATION	OFFSET	FEET	EACH	EACH	FEET	FEET	
SB I-15	294+80.00	199.0 LT	306+00.00	199.0 LT	1,285.00		6	1,285		ATTACH TORTOISE FENCE FABRIC TO TYPE B FENCE
A LINE	14+34.00	140.0 LT	19+00.00	104.0 LT	445.00		1	445		ATTACH TORTOISE FENCE FABRIC TO TYPE B FENCE
A LINE	19+00.00	104.0 LT	25+47.18	149.2 LT	693.00		2	693		ATTACH TORTOISE FENCE FABRIC TO TYPE B FENCE
A LINE	25+47.20	149.2 LT	28+00.15	149.2 LT	253.00	1	2			
A LINE	28+00.15	89.0 LT	38+36.00	109.9 LT	1,115.00		6	1,115		ATTACH TORTOISE FENCE FABRIC TO TYPE B FENCE
32335	323+48.00	LT	324+13.00	LT	419.00		10			
SB I-15	323+48.00	RT	323+48.00	RT	190.00		8			FENCE BETWEEN CONCRETE BOX CULVERTS IN MEDIAN
SB I-15	330+77.81	199.0 LT	337+50.00	199.0 LT	672.00		2	672		ATTACH TORTOISE FENCE FABRIC TO TYPE B FENCE
NB I-15	296+25.00	LT	296+25.00	LT	295.00		8			FENCE BETWEEN CONCRETE HEADWALLS IN MEDIAN
NB I-15	295+43.00	82.00 RT	309+21.00	199.00 RT	1,472.00		6			
B LINE	14+40.44	155.64 RT	24+10.10	184.32 RT	1,091.00		5			
B LINE	26+30.00	295.00 RT	27+30.00	180.00 RT					180	
B LINE	26+66.67	224.31 RT	30+99.62	81.73 RT	560.00		5			
NB I-15	325+49.80	199.00 RT	338+75.00	199.00 RT	1,322.00		2			
I-15 ACCESS ROAD	9+25.00	99.0 LT	13+63.61	113.8 LT	330.00		1			
I-15 ACCESS ROAD	9+25.00	99.0 RT	13+34.32	144.15 RT	378.00		1			
I-15 ACCESS ROAD	23+92.00	144.00 LT	31+65.41	144.00 LT	775.00		2	775		ATTACH TORTOISE FENCE FABRIC TO TYPE B FENCE
I-15 ACCESS ROAD	23+31.98	109.0 RT	31+65.80	109.00 RT	835.00		2	835		ATTACH TORTOISE FENCE FABRIC TO TYPE B FENCE
I-15 ACCESS ROAD	31+65.41	144.00 LT	31+65.41	109.00 RT	253.00	1	2	253		ATTACH TORTOISE FENCE FABRIC TO TYPE B FENCE
TOTAL					12,383	2	71	6,073	180	

NO. | DATE | REVISION | BY | CHECK | REMARKS

ORIGINAL SUBMISSION FOR AUTHORIZATION — DATE

UTAH DEPARTMENT OF TRANSPORTATION
REGION 4 — RICHFIELD, UTAH
ROADWAY DESIGN

REVIEW — DESIGN SJD 5/02 — CHECK CDW 7/03 — DATE — BY
DRAIN SJD 5/02 — CHECK CDW 7/03
QUANT. SJD 5/02 — CHECK CDW 7/03

APPROVAL RECOMM. — DATE — PROJECT DESIGN ENGINEER
APPROVED FOR USE BY UDOT — DATE — RECONSTRUCTION ENGINEER

WASHINGTON INTERCHANGE @ RP 13
SUMMARY SHEET
PROJECT NUMBER #SP-15-1(20)13
WASHINGTON COUNTY
SHEET NO. SM-11

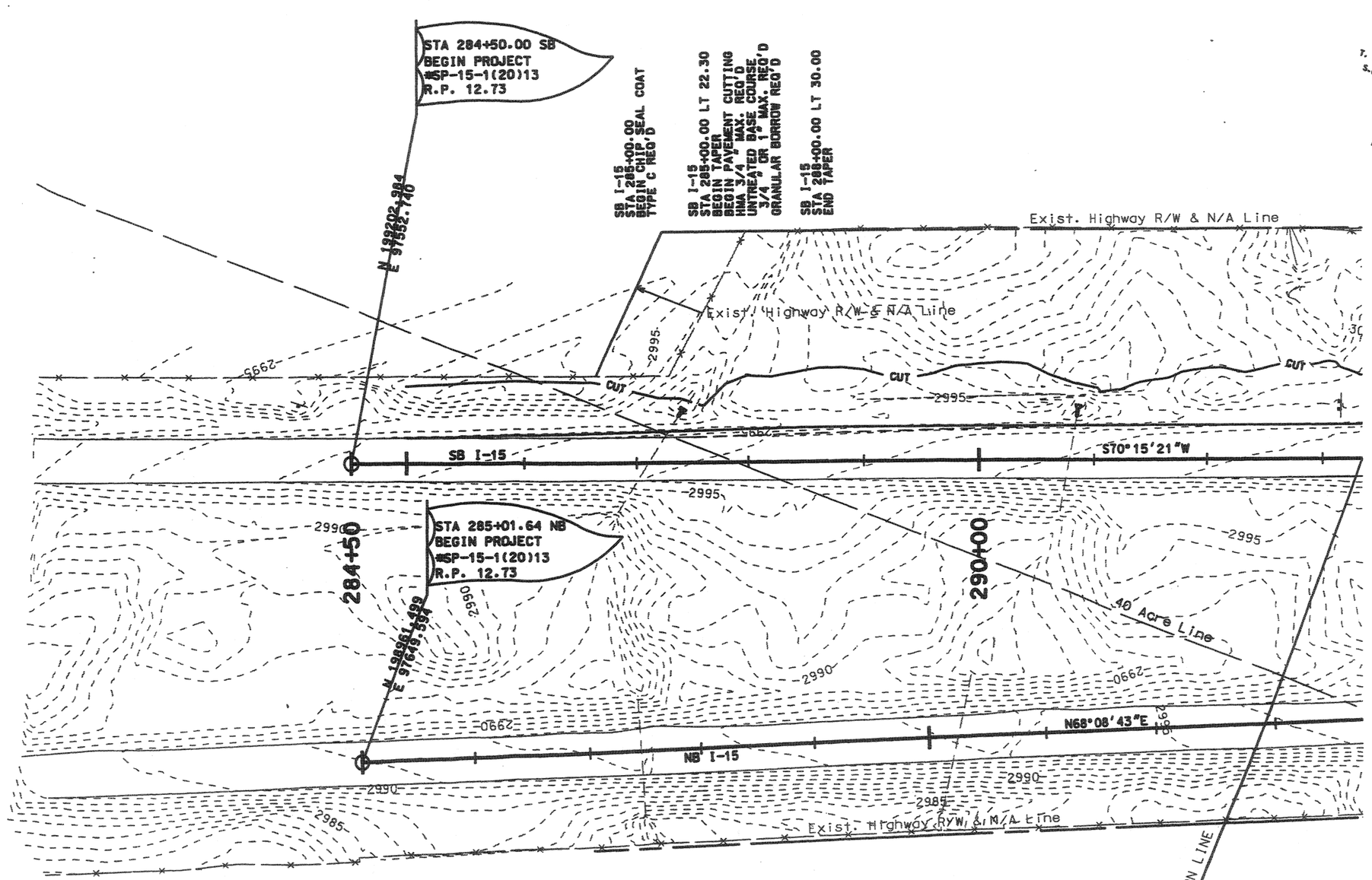

UTILITY NAME	CONTACT PERSON	PHONE NUMBER
WASHINGTON CITY	MICHAEL SHAW	(435) 656-6300
UTAH POWER	DON CHRISTENSEN	(801) 220-2218
BLUE STAKES RELOCATION CENTER		1-800-662-4111 (801) 532-5000

NOTES: THE CONTRACTOR SHALL VERIFY LOCATION, HEIGHT, AND DEPTH OF ALL SURFACE, OVERHEAD, AND UNDERGROUND UTILITIES.

UTAH DEPARTMENT OF TRANSPORTATION
REGION 4 — RICHFIELD, UTAH
ROADWAY DESIGN

DESIGN SJO 5/02 CHECK CGW 7/03 REVIEW
DRAWN SJO 5/02 CHECK CGW 7/03 DATE
QUANT. SJO 5/02 CHECK CGW 7/03 BY

NO. DATE REVISION MADE (PROJECT ENGINEER) APPROVED (RECONSTRUCTION ENGINEER) REMARKS
ORIGINAL SUBMISSION FOR AUTHORIZATION
DATE

REVISIONS

PROJECT DESIGN ENGINEER DATE
RECONSTRUCTION ENGINEER DATE
APPROVED FOR UDOT BY UDOT
REGIONAL ENGINEER DATE

WASHINGTON INTERCHANGE @ RP 13
ROADWAY PLAN SHEET
PROJECT NUMBER #SP-15-1(20)13

WASHINGTON COUNTY

SHEET NO. RD-1

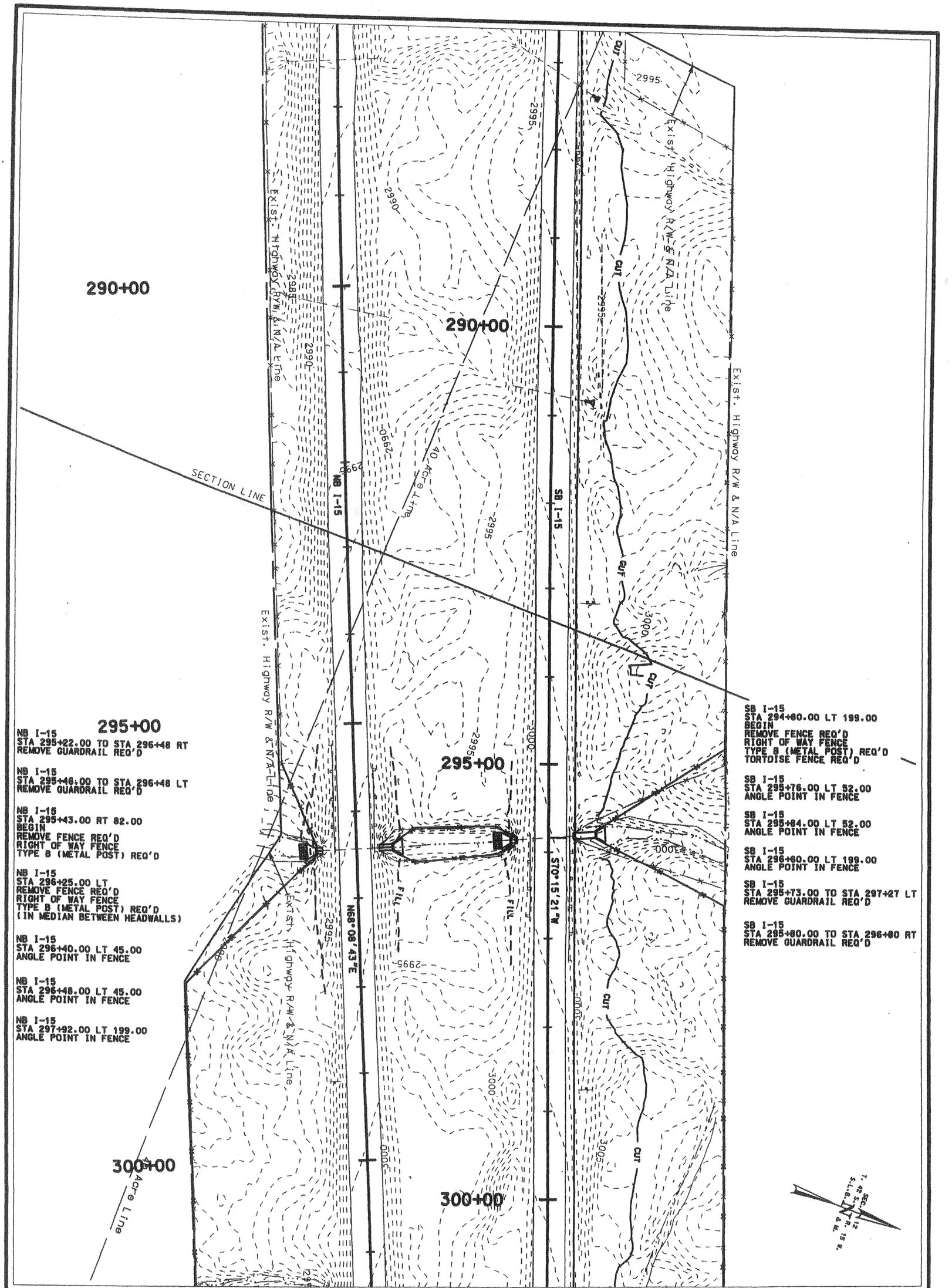

SHEET NO. RD-2	WASHINGTON COUNTY	WASHINGTON INTERCHANGE @ RP 13	UTAH DEPARTMENT OF TRANSPORTATION REGION 4 — RICHFIELD, UTAH ROADWAY DESIGN				
		ROADWAY PLAN SHEET	APPROVAL RECOMM. _____ DATE _____ PROJECT DESIGN ENGINEER	DESIGN SJO 5/02	CHECK CGW 7/03	REVIEW	
			APPROVED FOR USE BY UDOT _____ DATE _____ PRECONSTRUCTION ENGINEER	DRAWN SJO 5/02	CHECK CGW 7/03	DATE	
		PROJECT NUMBER #SP-15-1(20)13		QUANT. SJO 5/02	CHECK CGW 7/03	BY	

NO.	DATE	DESIGN REV. BY	MAPS CONF. BY	PARCELS AFFECTED	REQUEST BY	REMARKS
						ORIGINAL SUBMISSION FOR AUTHORIZATION
DATE						REVISIONS

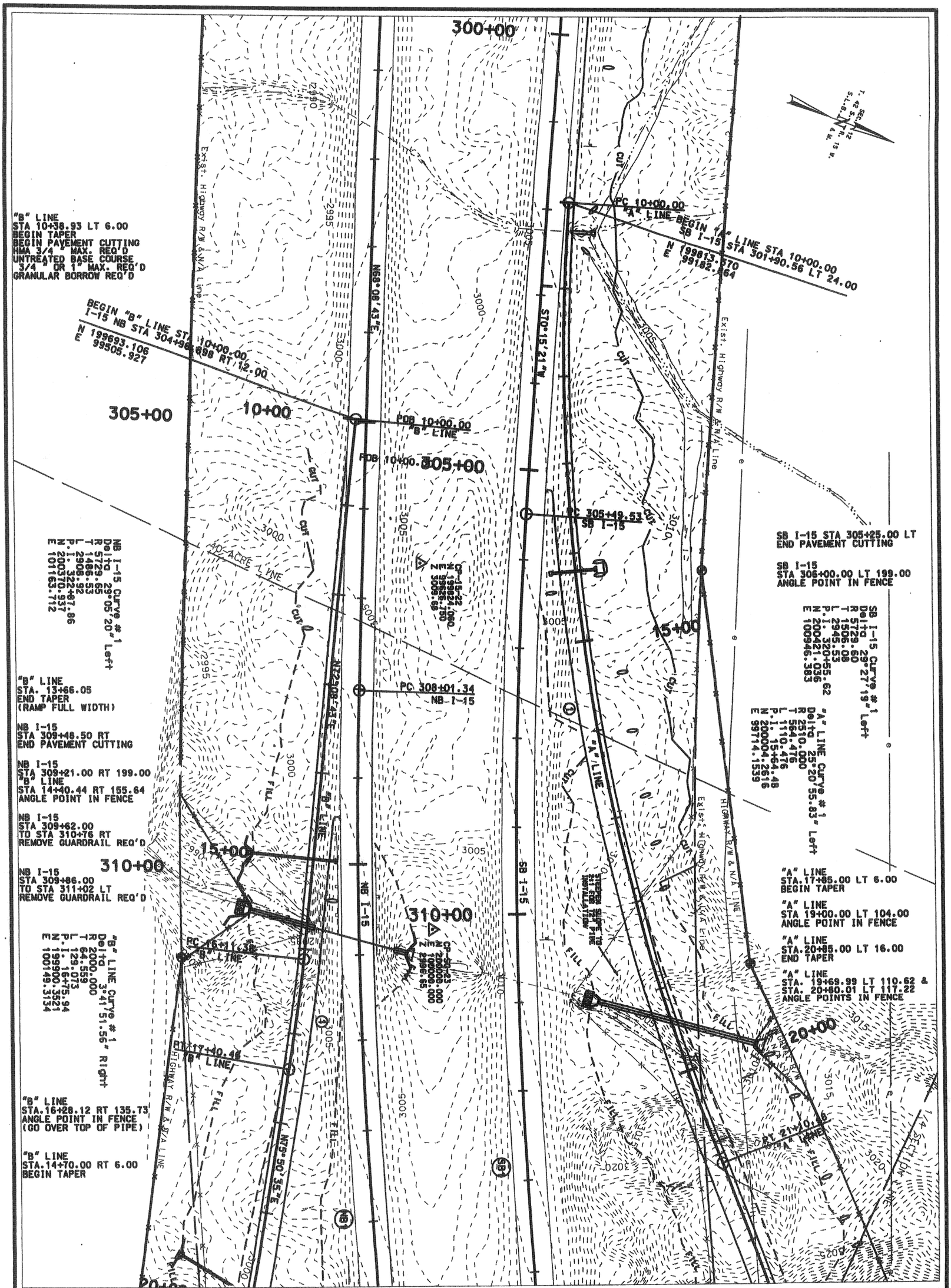

SHEET NO. RD-3	WASHINGTON COUNTY	WASHINGTON INTERCHANGE @ RP 13	UTAH DEPARTMENT OF TRANSPORTATION REGION 4 — RICHFIELD, UTAH										
		ROADWAY PLAN SHEET	ROADWAY DESIGN										
			APPROVAL RECOMM. DATE PROJECT DESIGN ENGINEER	DESIGN SJO 5/02	CHECK CGW 7/03	REVIEW							
		PROJECT NUMBER #SP-15-1(20)13	APPROVED FOR USE BY UDOT DATE PRECONSTRUCTION ENGINEER	DRAWN SJO 5/02	CHECK CGW 7/03	DATE	NO.	DATE	DESIGN REV. BY	MAPS CORR. BY	PARCELS AFFECTED	REQUEST BY	REMARKS
				QUANT. SJO 5/02	CHECK CGW 7/03	BY	ORIGINAL SUBMISSION FOR AUTHORIZATION						
							DATE	REVISIONS					

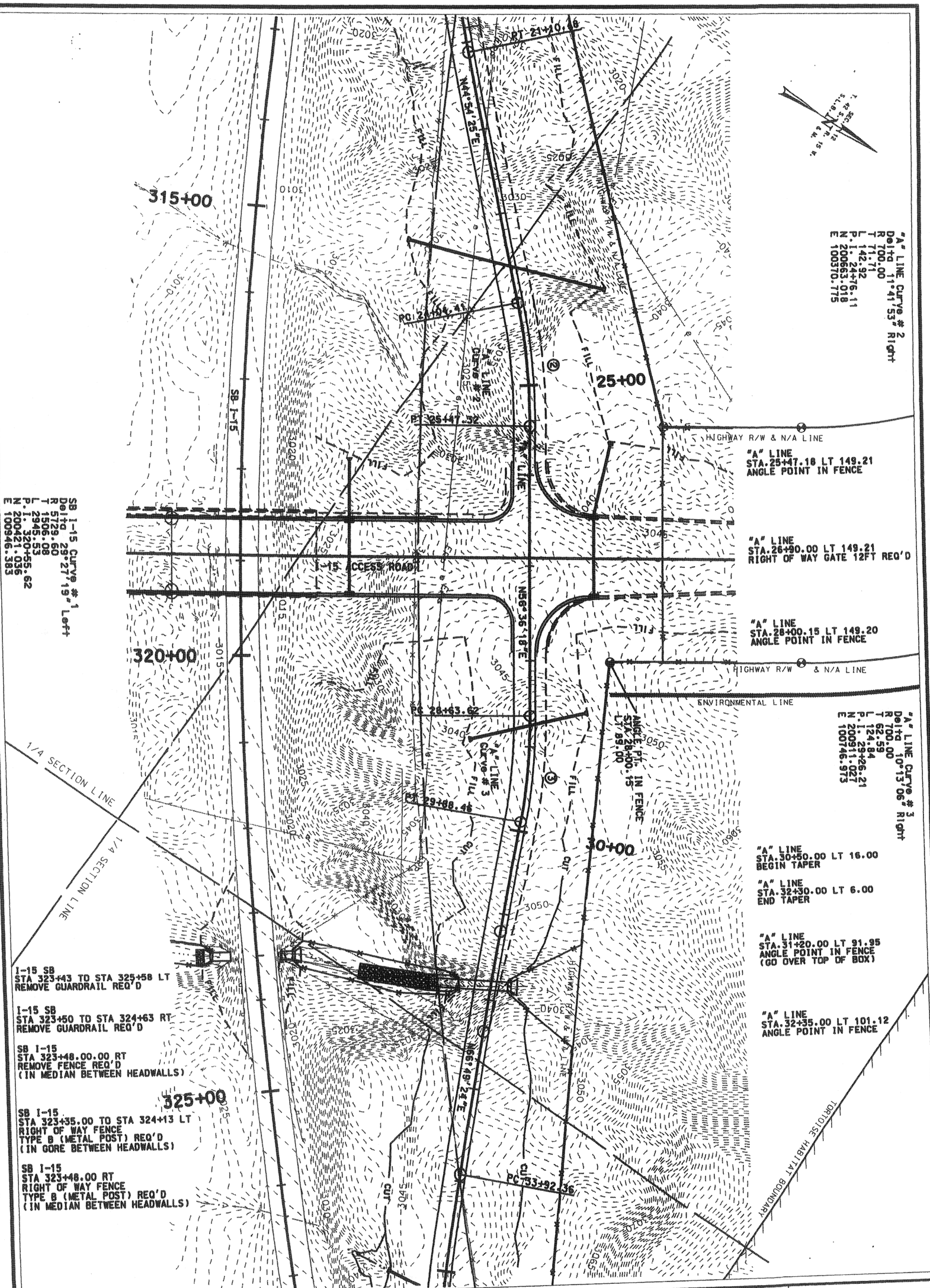

SHEET NO. RDG-4

WASHINGTON COUNTY

WASHINGTON INTERCHANGE @ RP 13

ROADWAY PLAN SHEET

PROJECT NUMBER #SP-15-1(20)13

UTAH DEPARTMENT OF TRANSPORTATION

REGION 4 -- RICHFIELD, UTAH

ROADWAY DESIGN

APPROVAL RECOMM. _____ DATE _____ PROJECT DESIGN ENGINEER

APPROVED FOR USE BY UDOT _____ DATE _____ PRECONSTRUCTION ENGINEER

DESIGN SJD 5/02	CHECK CGW 7/03	REVIEW	
DRAWN SJD 5/02	CHECK CGW 7/03	DATE	
QUANT. SJD 5/02	CHECK CGW 7/03	BY	

NO.	DATE	DESIGN REV. BY	MAPS (CORR. BY)	PARCELS AFFECTED	REQUEST BY	REMARKS
	DATE	ORIGINAL SUBMISSION FOR AUTHORIZATION				
		REVISIONS				

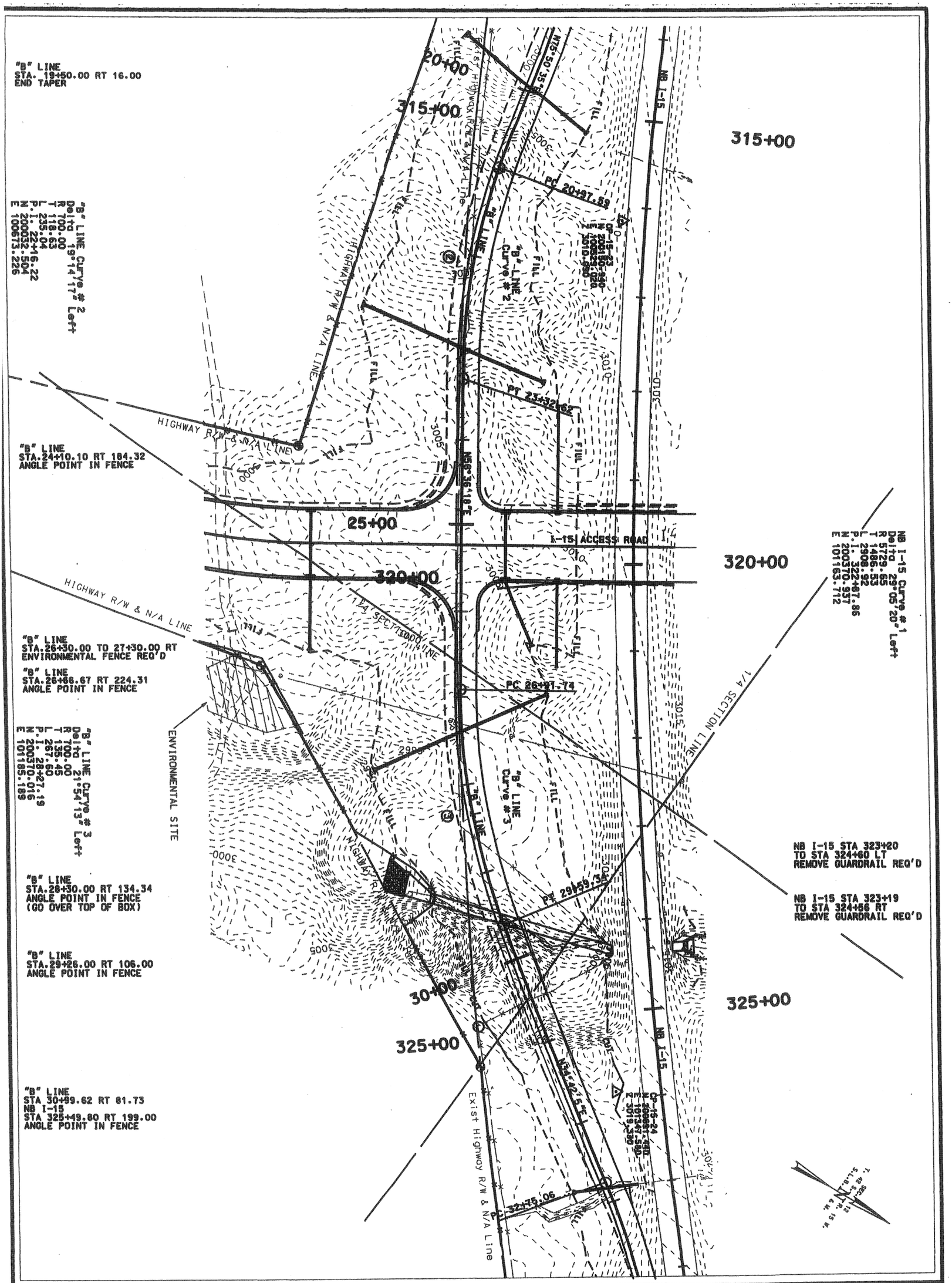

SHEET NO. RD-5	WASHINGTON COUNTY	WASHINGTON INTERCHANGE @ RP 13	UTAH DEPARTMENT OF TRANSPORTATION — REGION 4 — RICHFIELD, UTAH										
		ROADWAY PLAN SHEET	ROADWAY DESIGN										
			APPROVAL RECOMM. DATE PROJECT DESIGN ENGINEER	DESIGN SJO 5/02	CHECK CGW 7/03	REVIEW							
				DRAWN SJO 5/02	CHECK CGW 7/03	DATE							
		PROJECT NUMBER #SP-15-1(20)13	APPROVED FOR USE BY UDOT DATE PRECONSTRUCTION ENGINEER	QUANT. SJO 5/02	CHECK CGW 7/03	BY							
							NO.	DATE	DESIGN REV. BY	MAPS CORR. BY	PARCELS AFFECTED	REQUEST BY	REMARKS
													ORIGINAL SUBMISSION FOR AUTHORIZATION
							DATE				REVISIONS		

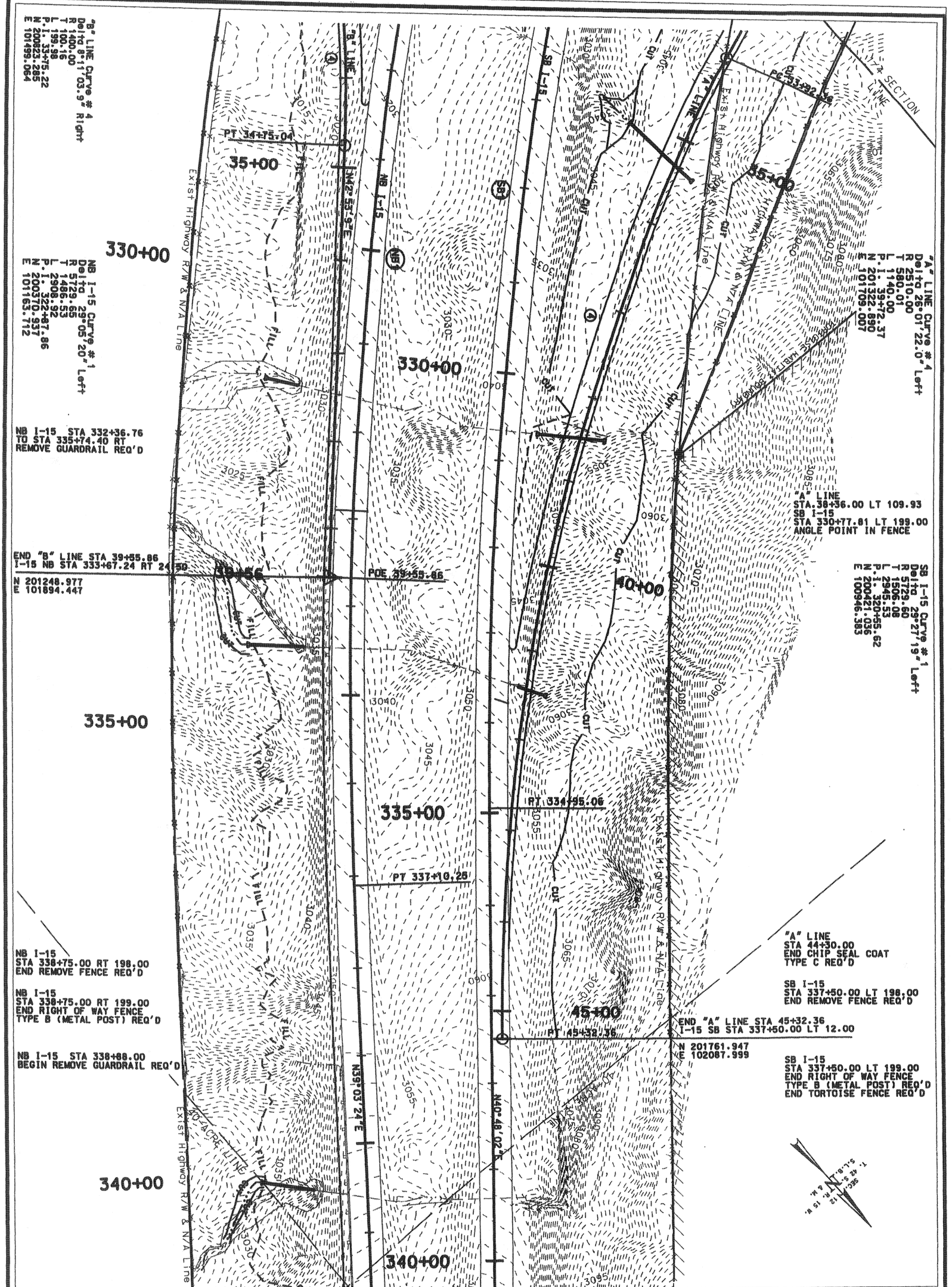

SHEET NO. RD-6

WASHINGTON COUNTY

WASHINGTON INTERCHANGE @ RP 13

ROADWAY PLAN SHEET

PROJECT NUMBER #SP-15-1(20)13

UTAH DEPARTMENT OF TRANSPORTATION

REGION 4 — RICHFIELD, UTAH

ROADWAY DESIGN

APPROVAL RECOMM. DATE PROJECT DESIGN ENGINEER

APPROVED FOR USE BY UDOT DATE PRECONSTRUCTION ENGINEER

DESIGN SJO 5/02	CHECK CGW 7/03	REVIEW	
DRAWN SJO 5/02	CHECK CGW 7/03	DATE	
QUANT. SJO 5/02	CHECK CGW 7/03	BY	

NO.	DATE	DESIGN REV. BY	MAPS CORR. BY	PARCELS AFFECTED	REQUEST BY	REMARKS
						ORIGINAL SUBMISSION FOR AUTHORIZATION

DATE REVISIONS

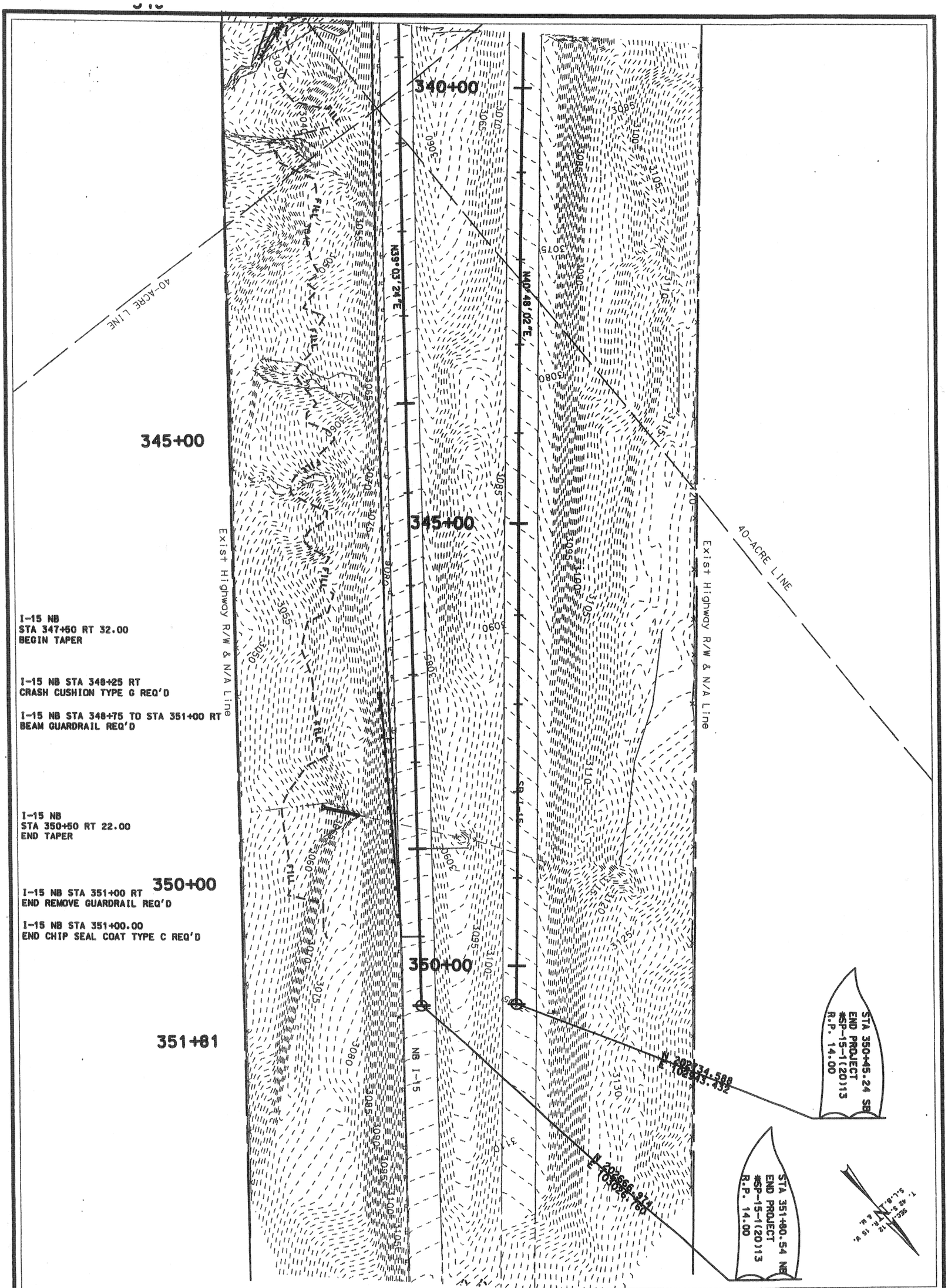

SHEET NO. RD-7	WASHINGTON COUNTY	WASHINGTON INTERCHANGE @ RP 13	UTAH DEPARTMENT OF TRANSPORTATION										
		ROADWAY PLAN SHEET	REGION 4 — RICHFIELD, UTAH										
			ROADWAY DESIGN										
			APPROVAL RECOMM. DATE PROJECT DESIGN ENGINEER	DESIGN SJO 5/02	CHECK CGW 7/03	REVIEW							
			APPROVED FOR USE BY UDOT DATE PRECONSTRUCTION ENGINEER	DRAWN SJO 5/02	CHECK CGW 7/03	DATE	NO.	DATE	DESIGN REV. BY	MAPS CORR. BY	PARCELS AFFECTED	REQUEST BY	REMARKS
		PROJECT NUMBER *SP-15-1(20)13		QUANT. SJO 5/02	CHECK CGW 7/03	BY			ORIGINAL SUBMISSION FOR AUTHORIZATION				
								DATE	REVISIONS				

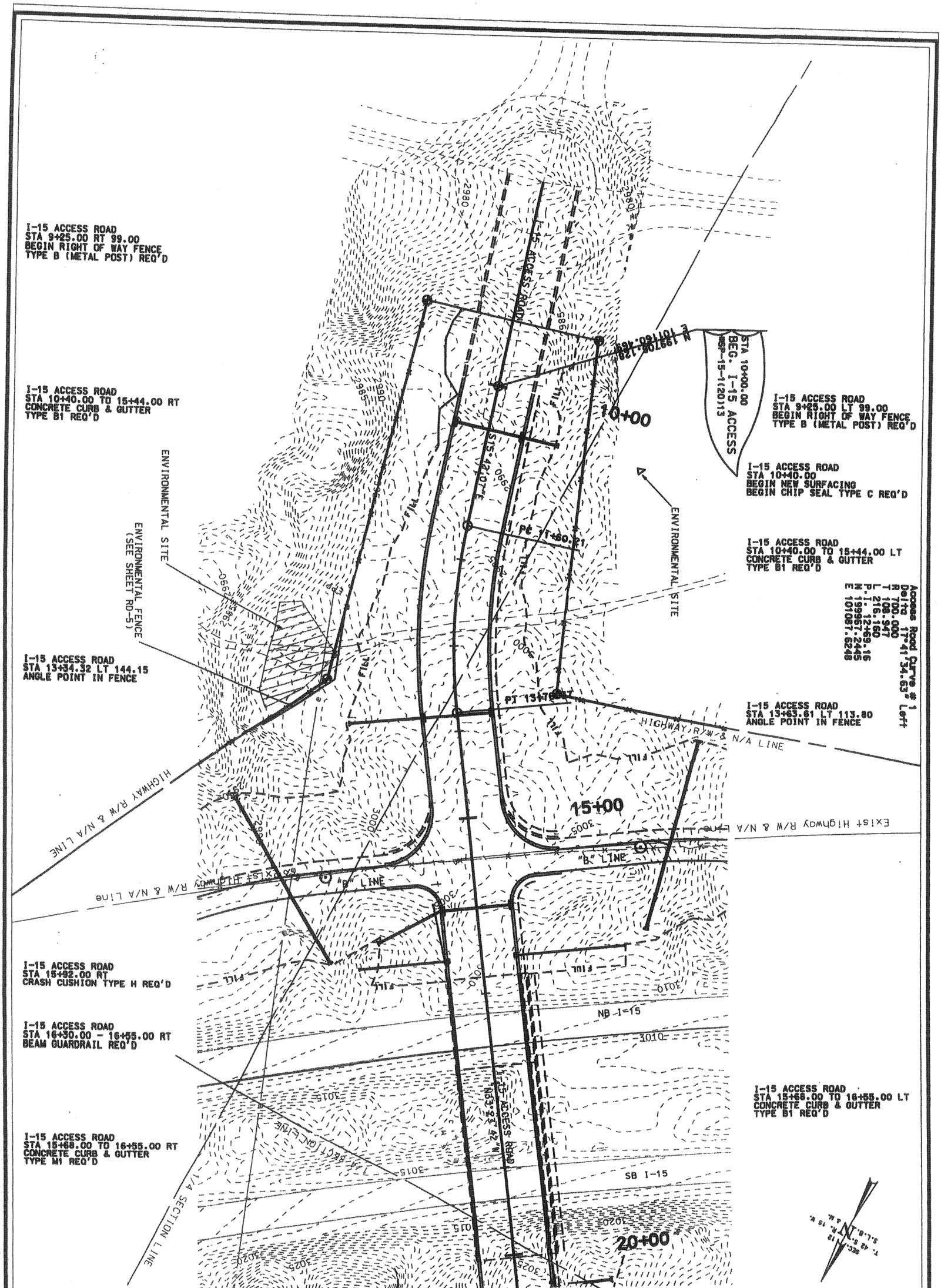

SHEET NO. RD-6	WASHINGTON COUNTY	WASHINGTON INTERCHANGE @ RP 13	UTAH DEPARTMENT OF TRANSPORTATION REGION 4 — RICHFIELD, UTAH ROADWAY DESIGN				
		ROADWAY PLAN SHEET	APPROVAL RECOMM. ____ DATE ____ PROJECT DESIGN ENGINEER	DESIGN SJO 5/02	CHECK CGW 7/03	REVIEW	
				DRAWN SJO 5/02	CHECK CGW 7/03	DATE	
		PROJECT NUMBER *SP-15-1(20)13	APPROVED FOR USE BY UDOT ____ DATE ____ PRECONSTRUCTION ENGINEER	QUANT. SJO 5/02	CHECK CGW 7/03	BY	

NO.	DATE	REVISIONS	BY	REMARKS
		ORIGINAL SUBMISSION FOR AUTHORIZATION		

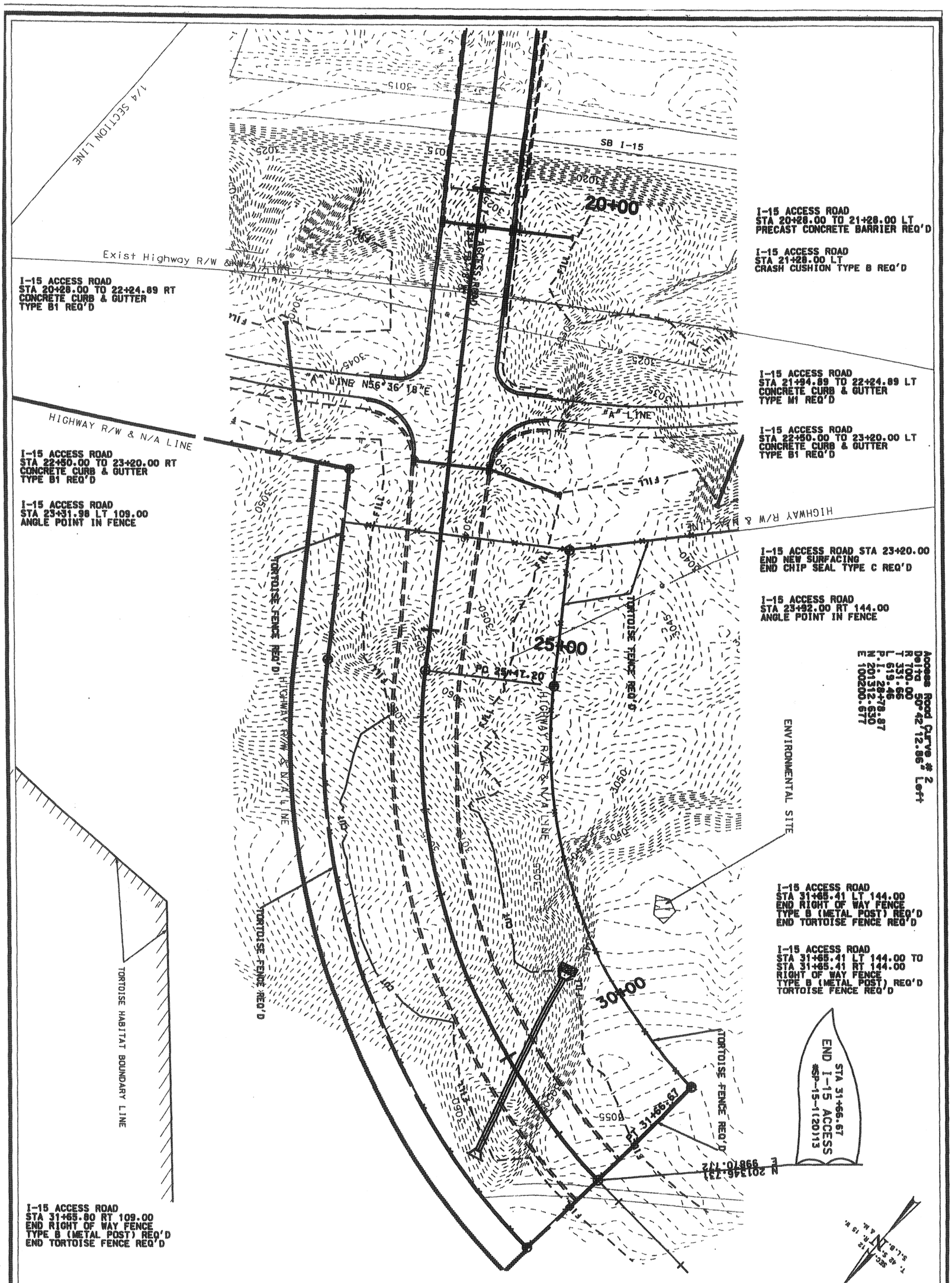

SHEET NO. RD-6

WASHINGTON COUNTY

WASHINGTON INTERCHANGE @ RP 13

ROADWAY PLAN SHEET

PROJECT NUMBER #SP-15-1(20)13

UTAH DEPARTMENT OF TRANSPORTATION

REGION 4 — RICHFIELD, UTAH

ROADWAY DESIGN

APPROVAL RECOMM. _____ DATE _____ PROJECT DESIGN ENGINEER

APPROVED FOR USE BY UDOT _____ DATE _____ PRECONSTRUCTION ENGINEER

DESIGN SJO 5/02 CHECK CDW 7/03 REVIEW

DRAWN SJO 5/02 CHECK CDW 7/03 DATE

QUANT. SJO 5/02 CHECK CDW 7/03 BY

NO.	DATE	DESIGN / MAPS / PARCELS (REQUEST REV. BY (CORR. BY)/APPROVED) BY	REMARKS
		ORIGINAL SUBMISSION FOR AUTHORIZATION	
DATE		REVISIONS	

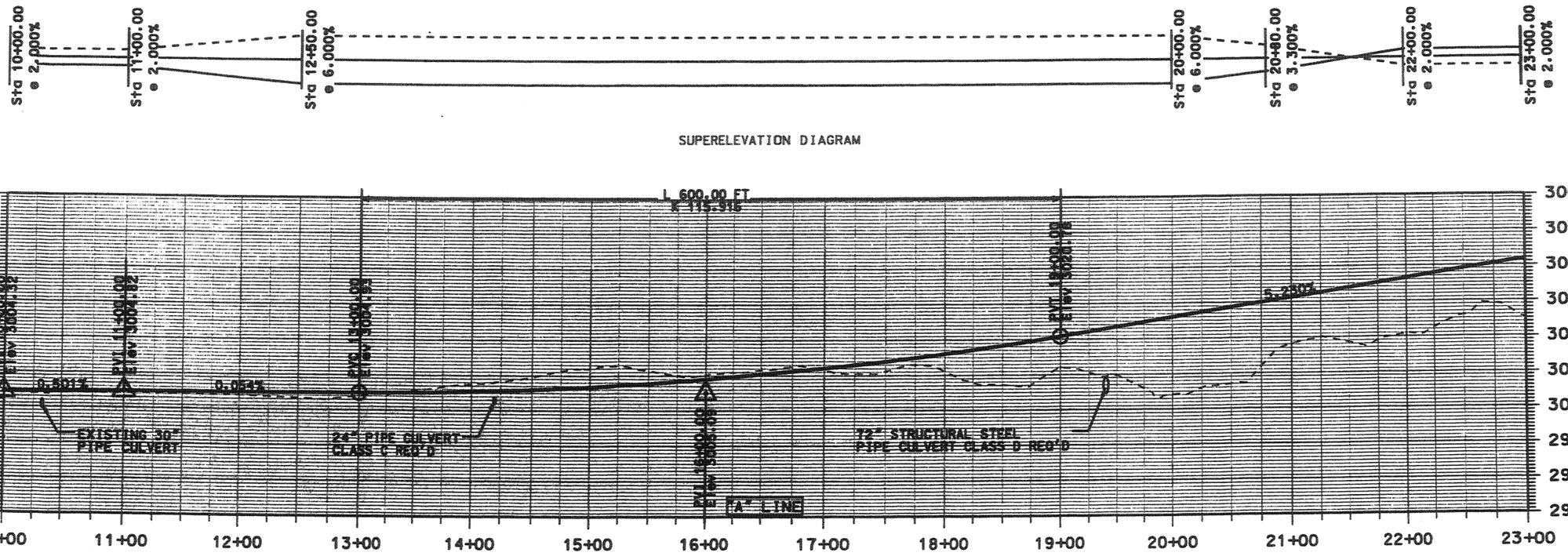

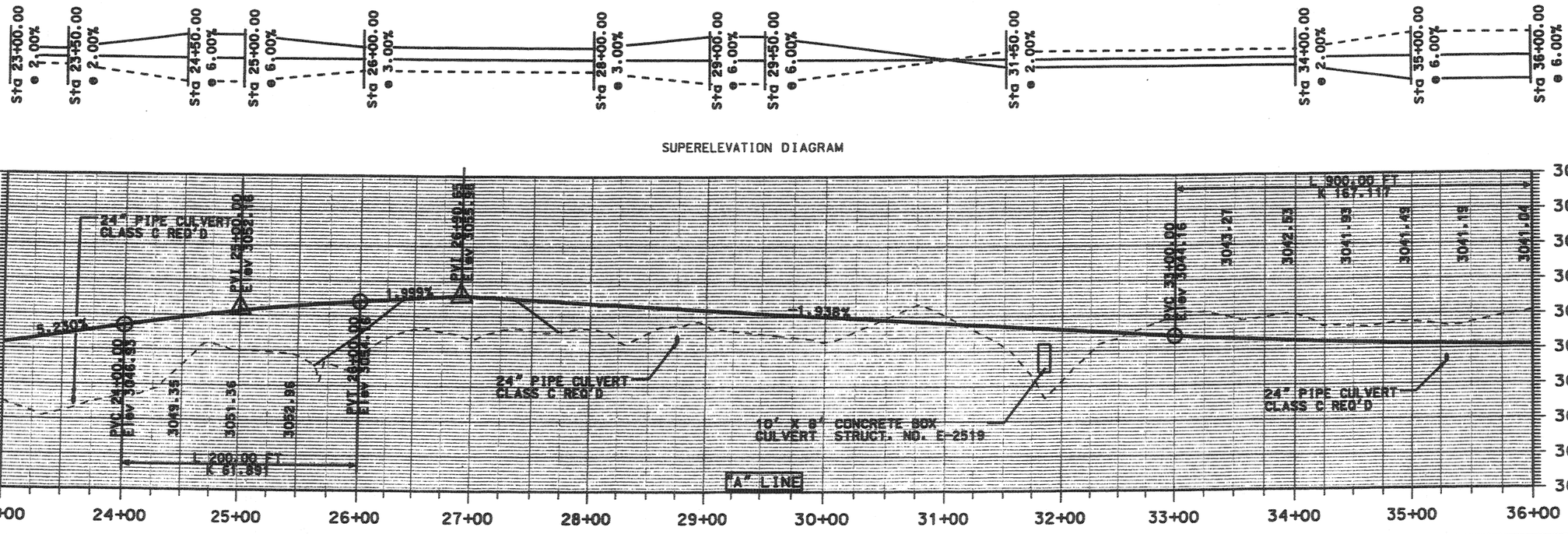

NO.	DATE	REMARKS
		ORIGINAL SUBMISSION FOR AUTHORIZATION
	DATE	REVISIONS

UTAH DEPARTMENT OF TRANSPORTATION
REGION 4 — RICHFIELD, UTAH
ROADWAY DESIGN

DESIGN SJD 5/02	CHECK CDW 7/03	REVIEW	
DRAWN SJD 5/02	CHECK CDW 7/03	DATE	
QUANT. SJD 5/02	CHECK CDW 7/03	BY	

APPROVAL RECOMM. — DATE — PROJECT DESIGN ENGINEER
APPROVED FOR PUBLIC BY UDOT — DATE — PRECONSTRUCTION ENGINEER

WASHINGTON INTERCHANGE @ RP 13

PROFILE SHEET

"A" LINE PROFILE

PROJECT NUMBER #SP-15-1(20)13

WASHINGTON COUNTY

SHEET NO. RP-1

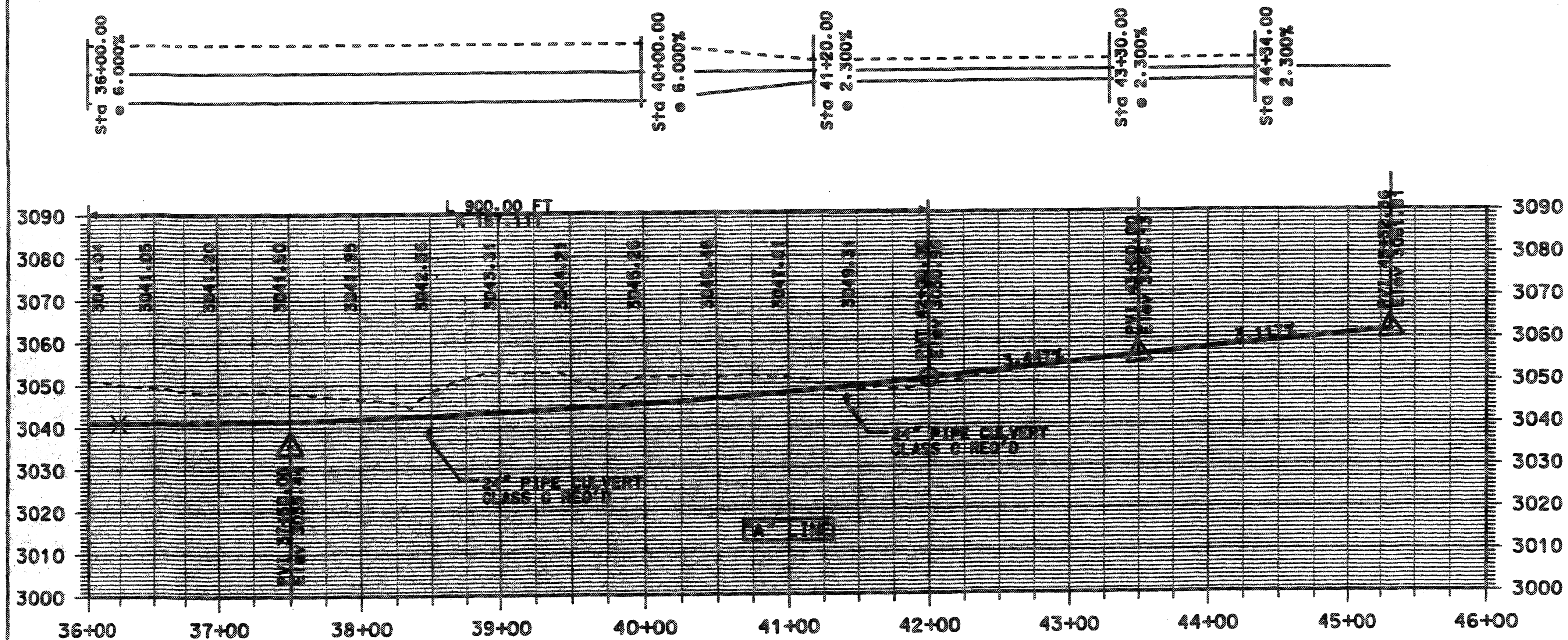

UTAH DEPARTMENT OF TRANSPORTATION
REGION 4 — RICHFIELD, UTAH
ROADWAY DESIGN

APPROVAL RECOMM. ___ DATE ___ PROJECT DESIGN ENGINEER	DESIGN SJO 5/02	CHECK CGW 7/03	REVIEW
	DRAWN SJO 5/02	CHECK CGW 7/03	DATE ___
APPROVED FOR USE BY UDOT ___ DATE ___ PRECONSTRUCTION ENGINEER	QUANT. SJO 5/02	CHECK CGW 7/03	BY ___

REVISIONS

NO.	DATE	REMARKS
		ORIGINAL SUBMISSION FOR AUTHORIZATION

WASHINGTON INTERCHANGE @ RP 13
PROFILE SHEET
"A" LINE PROFILE
PROJECT NUMBER #SP-15-1(20)13

WASHINGTON COUNTY

SHEET NO. RP-2

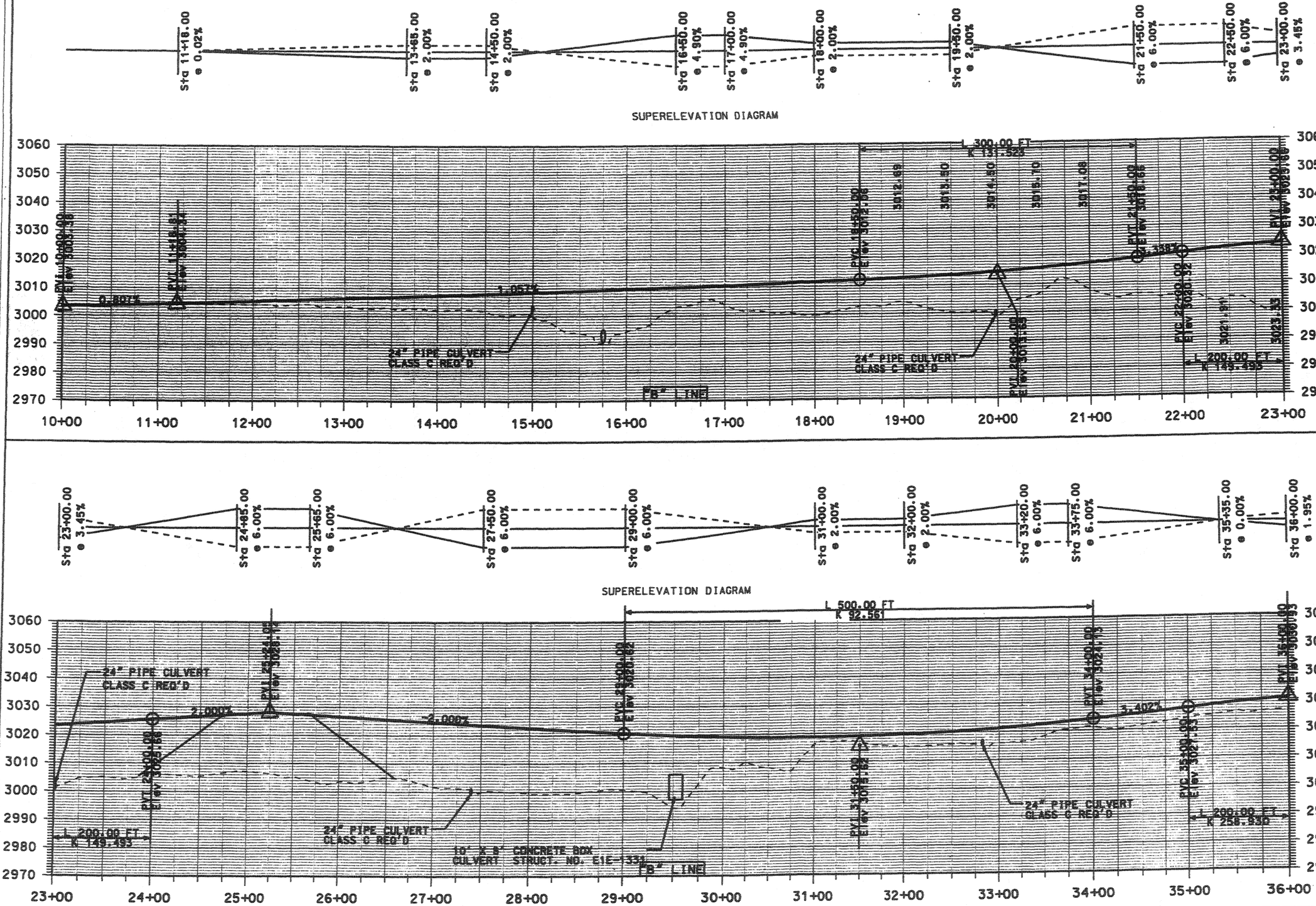

UTAH DEPARTMENT OF TRANSPORTATION
REGION 4 — RICHFIELD, UTAH
ROADWAY DESIGN

WASHINGTON INTERCHANGE @ RP 13

PROFILE SHEET

"B" LINE PROFILE

PROJECT NUMBER *SP-15-1(20)13

WASHINGTON COUNTY

SHEET NO. RP-3

NO.	DATE	REVISIONS
		REMARKS
		ORIGINAL SUBMISSION FOR AUTHORIZATION

DESIGN SJD 5/02 CHECK CDW 7/03 REVIEW
DRAWN SJD 5/02 CHECK CDW 7/03 DATE
QUANT. SJD 5/02 CHECK CDW 7/03 BY

APPROVAL RECOMM. — DATE — PROJECT DESIGN ENGINEER
APPROVED FOR USE BY UDOT — DATE — PRECONSTRUCTION ENGINEER

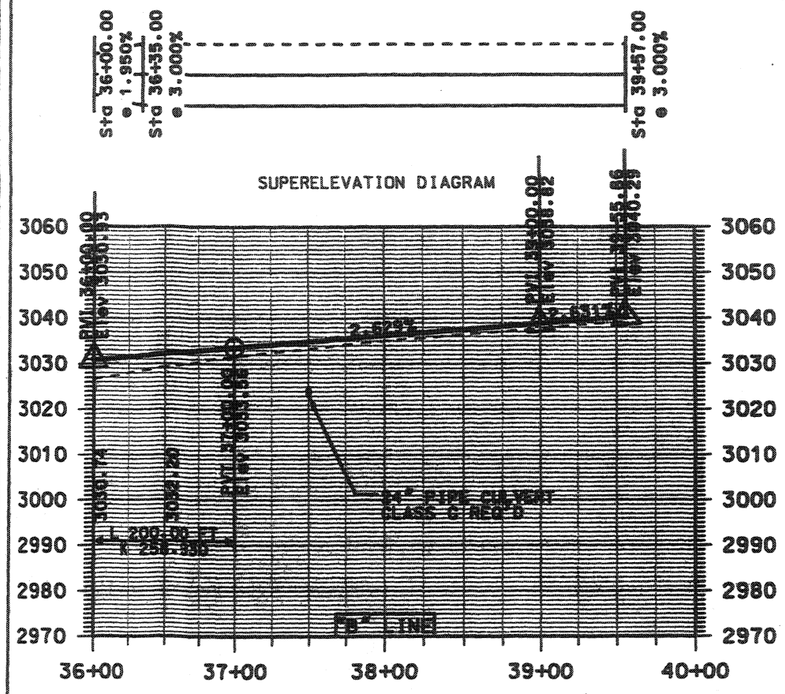

UTAH DEPARTMENT OF TRANSPORTATION
REGION 4 — RICHFIELD, UTAH
ROADWAY DESIGN

DESIGN	SJO	5/02	CHECK COM 7/03
DRAWN	SJO	5/02	CHECK COM 7/03
QUANT.	SJO	5/02	CHECK COM 7/03

REVIEW
DATE
BY

NO.	DATE	REVISIONS BY (CHECK IF AFFECTED)	REVIEWED BY	REMARKS
	DATE	ORIGINAL SUBMISSION FOR AUTHORIZATION		

WASHINGTON INTERCHANGE @ RP 13

PROFILE SHEET

"B" LINE PROFILE

PROJECT NUMBER #SP-15-1(20)13

AUTHORIZED FOR USE BY UDOT — DATE — PRECONSTRUCTION ENGINEER

APPROVAL RECOMMENDED — DATE — PROJECT DESIGN ENGINEER

WASHINGTON COUNTY

SHEET NO.: RP-4

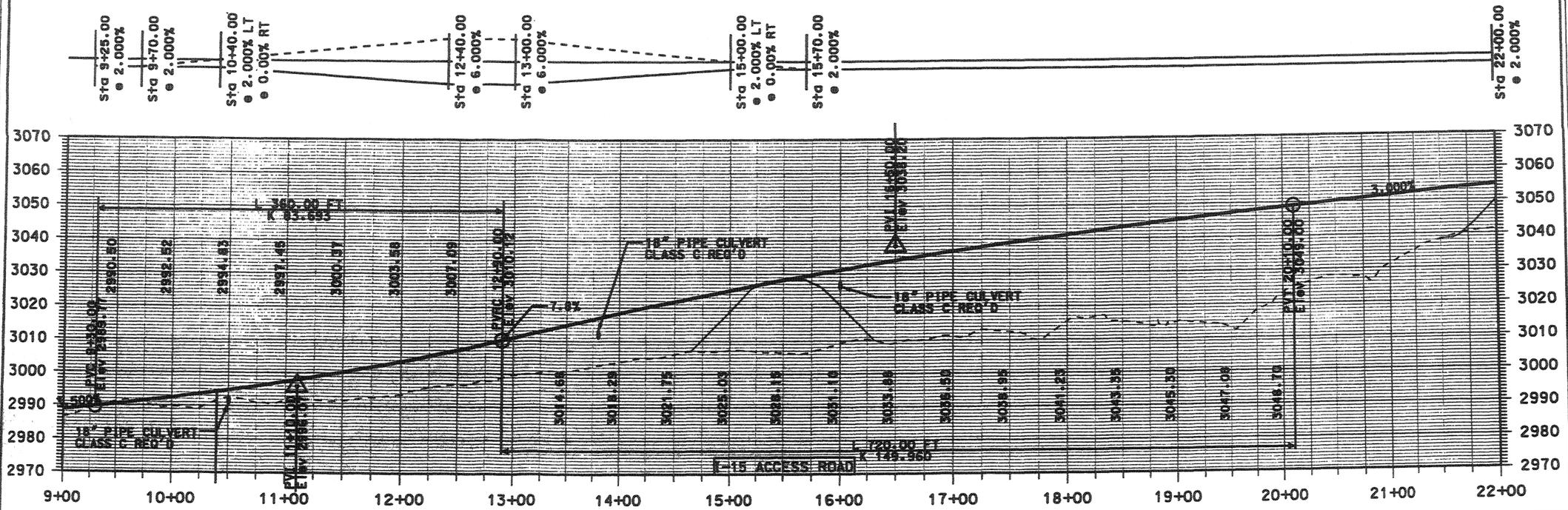

UTAH DEPARTMENT OF TRANSPORTATION
REGION 4 — RICHFIELD, UTAH
ROADWAY DESIGN

NO.	DATE	REMARKS
		DESIGN APPR. JMPL ACCEPTED REQUEST BY
		ORIGINAL SUBMISSION FOR AUTHORIZATION
	DATE	REVISIONS

DESIGN SJO 5/02	CHECK CDH 1/03	REVIEW	
DRAWN SJO 5/02	CHECK CDH 1/03	DATE	
QUANT. SJO 5/02	CHECK CDH 1/03	BY	

WASHINGTON INTERCHANGE @ RP 13

PROFILE SHEET

I-15 ACCESS ROAD PROFILE

ORIGINAL RECOMM. — DATE — PROJECT DESIGN ENGINEER

APPROVED BY UDOT — DATE — PRECONSTRUCTION ENGINEER

PROJECT NUMBER #SP-15-1(20)13

WASHINGTON COUNTY

SHEET NO. RP-5

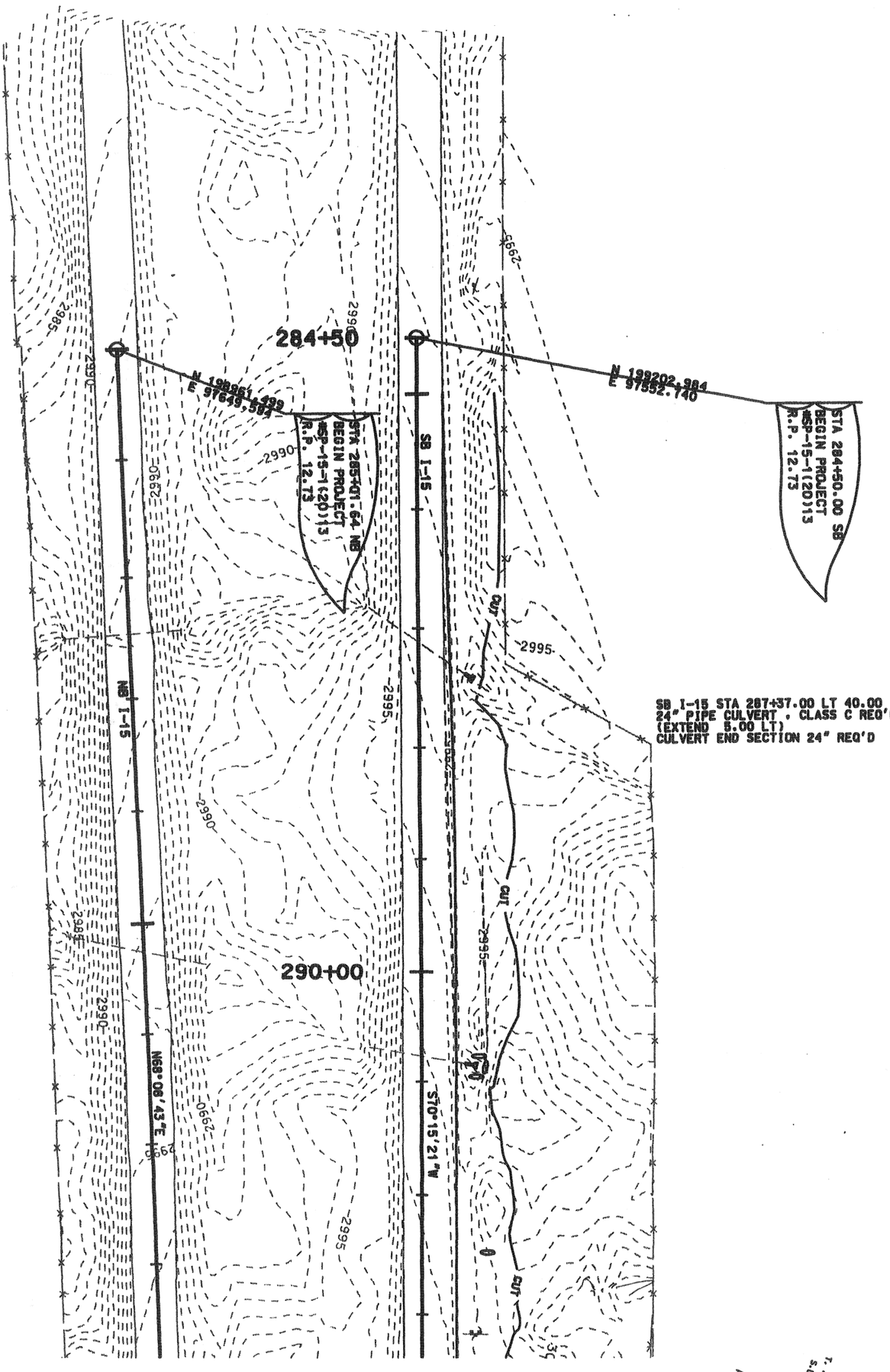

SHEET NO. DR-1

WASHINGTON COUNTY

WASHINGTON INTERCHANGE @ RP 13

ROADWAY PLAN SHEET

PROJECT NUMBER #SP-15-1(20)13

UTAH DEPARTMENT OF TRANSPORTATION
REGION 4 — RICHFIELD, UTAH
ROADWAY DESIGN

APPROVAL RECOMM. DATE PROJECT DESIGN ENGINEER

APPROVED FOR USE BY UDOT DATE PRECONSTRUCTION ENGINEER

DESIGN SJO 5/02	CHECK CGW 7/03	REVIEW		
DRAWN SJO 5/02	CHECK CGW 7/03	DATE		
QUANT. SJO 5/02	CHECK CGW 7/03	BY		

NO.	DATE	DESIGN REV. BY	MAPS CORR. BY	PARCELS AFFECTED	REQUEST BY	REMARKS
						ORIGINAL SUBMISSION FOR AUTHORIZATION
DATE						REVISIONS

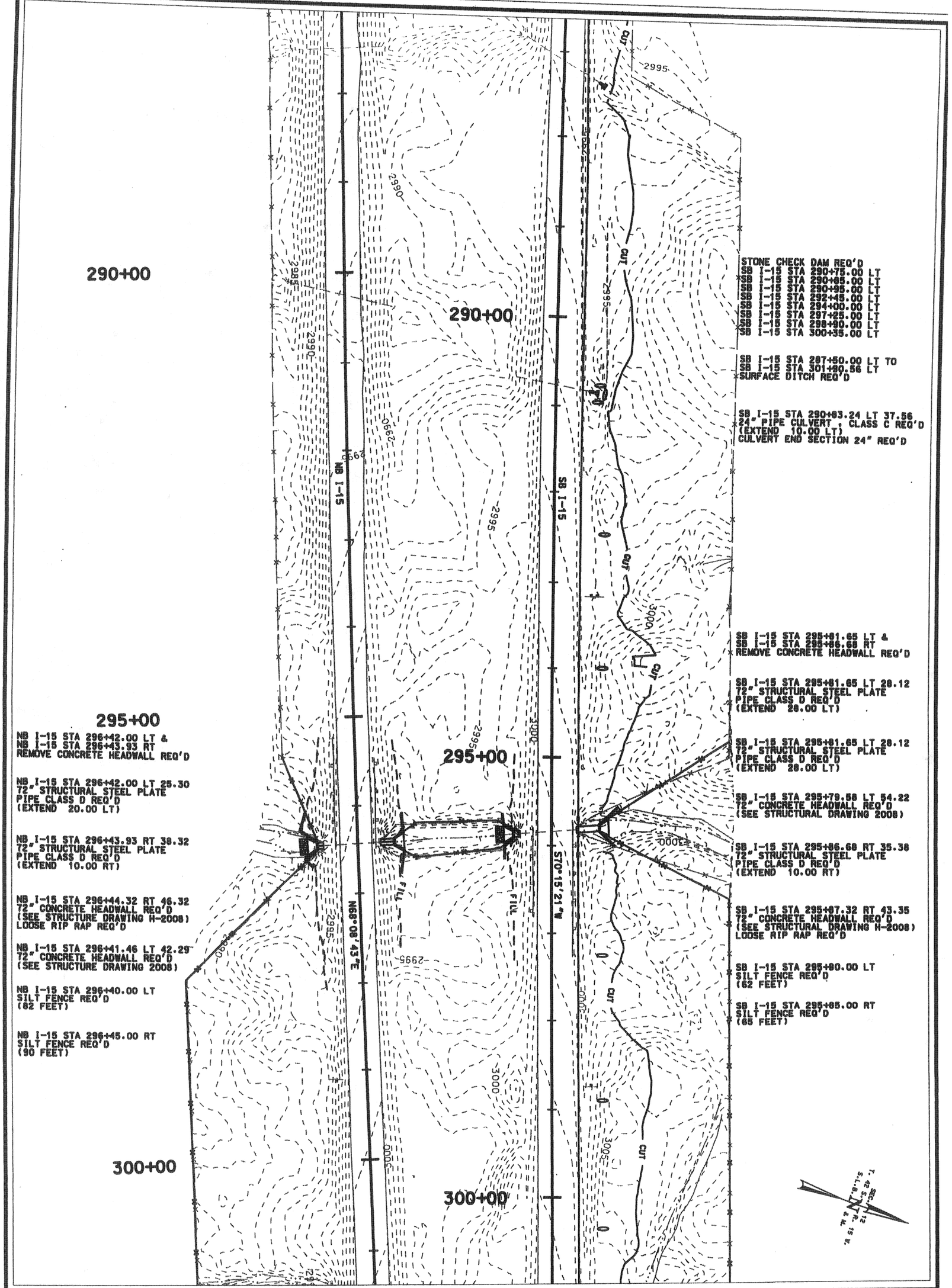

STONE CHECK DAM REQ'D
SB I-15 STA 290+75.00 LT
SB I-15 STA 290+85.00 LT
SB I-15 STA 290+95.00 LT
SB I-15 STA 292+45.00 LT
SB I-15 STA 294+00.00 LT
SB I-15 STA 297+25.00 LT
SB I-15 STA 298+80.00 LT
SB I-15 STA 300+35.00 LT

SB I-15 STA 287+50.00 LT TO
SB I-15 STA 301+20.56 LT
SURFACE DITCH REQ'D

SB I-15 STA 290+83.24 LT 37.56
24" PIPE CULVERT , CLASS C REQ'D
(EXTEND 10.00 LT)
CULVERT END SECTION 24" REQ'D

SB I-15 STA 295+81.65 LT &
SB I-15 STA 295+86.68 RT
REMOVE CONCRETE HEADWALL REQ'D

SB I-15 STA 295+81.65 LT 28.12
72" STRUCTURAL STEEL PLATE
PIPE CLASS D REQ'D
(EXTEND 28.00 LT)

SB I-15 STA 295+81.65 LT 28.12
72" STRUCTURAL STEEL PLATE
PIPE CLASS D REQ'D
(EXTEND 28.00 LT)

SB I-15 STA 295+79.58 LT 54.22
72" CONCRETE HEADWALL REQ'D
(SEE STRUCTURAL DRAWING 2008)

SB I-15 STA 295+86.68 RT 35.36
72" STRUCTURAL STEEL PLATE
PIPE CLASS D REQ'D
(EXTEND 10.00 RT)

SB I-15 STA 295+87.32 RT 43.35
72" CONCRETE HEADWALL REQ'D
(SEE STRUCTURAL DRAWING H-2008)
LOOSE RIP RAP REQ'D

SB I-15 STA 295+80.00 LT
SILT FENCE REQ'D
(62 FEET)

SB I-15 STA 295+85.00 RT
SILT FENCE REQ'D
(65 FEET)

NB I-15 STA 296+42.00 LT &
NB I-15 STA 296+43.93 RT
REMOVE CONCRETE HEADWALL REQ'D

NB I-15 STA 296+42.00 LT 25.30
72" STRUCTURAL STEEL PLATE
PIPE CLASS D REQ'D
(EXTEND 20.00 LT)

NB I-15 STA 296+43.93 RT 38.32
72" STRUCTURAL STEEL PLATE
PIPE CLASS D REQ'D
(EXTEND 10.00 RT)

NB I-15 STA 296+44.32 RT 46.32
72" CONCRETE HEADWALL REQ'D
(SEE STRUCTURE DRAWING H-2008)
LOOSE RIP RAP REQ'D

NB I-15 STA 296+41.46 LT 42.29
72" CONCRETE HEADWALL REQ'D
(SEE STRUCTURE DRAWING 2008)

NB I-15 STA 296+40.00 LT
SILT FENCE REQ'D
(82 FEET)

NB I-15 STA 296+45.00 RT
SILT FENCE REQ'D
(90 FEET)

T. 42 S.
R. 15 W.
S.L.B.&M.
SEC. 21

SHEET NO. DR-2

WASHINGTON COUNTY

WASHINGTON INTERCHANGE @ RP 13

DRAINAGE SHEET

PROJECT NUMBER #SP-15-1(20)13

UTAH DEPARTMENT OF TRANSPORTATION
REGION 4 — RICHFIELD, UTAH
ROADWAY DESIGN

APPROVAL RECOMM. _____ DATE _____ PROJECT DESIGN ENGINEER

APPROVED FOR USE BY UDOT _____ DATE _____ PRECONSTRUCTION ENGINEER

DESIGN SJO 5/02 CHECK CGW 7/03
DRAWN SJO 5/02 CHECK CGW 7/03
QUANT. SJO 5/02 CHECK CGW 7/03

REVIEW
DATE _____
BY _____

NO.	DATE	DESIGN REV. BY	DRAFT CORR. BY	PARCEL & REQUEST APPROVED BY	REMARKS
					ORIGINAL SUBMISSION FOR AUTHORIZATION

DATE REVISIONS

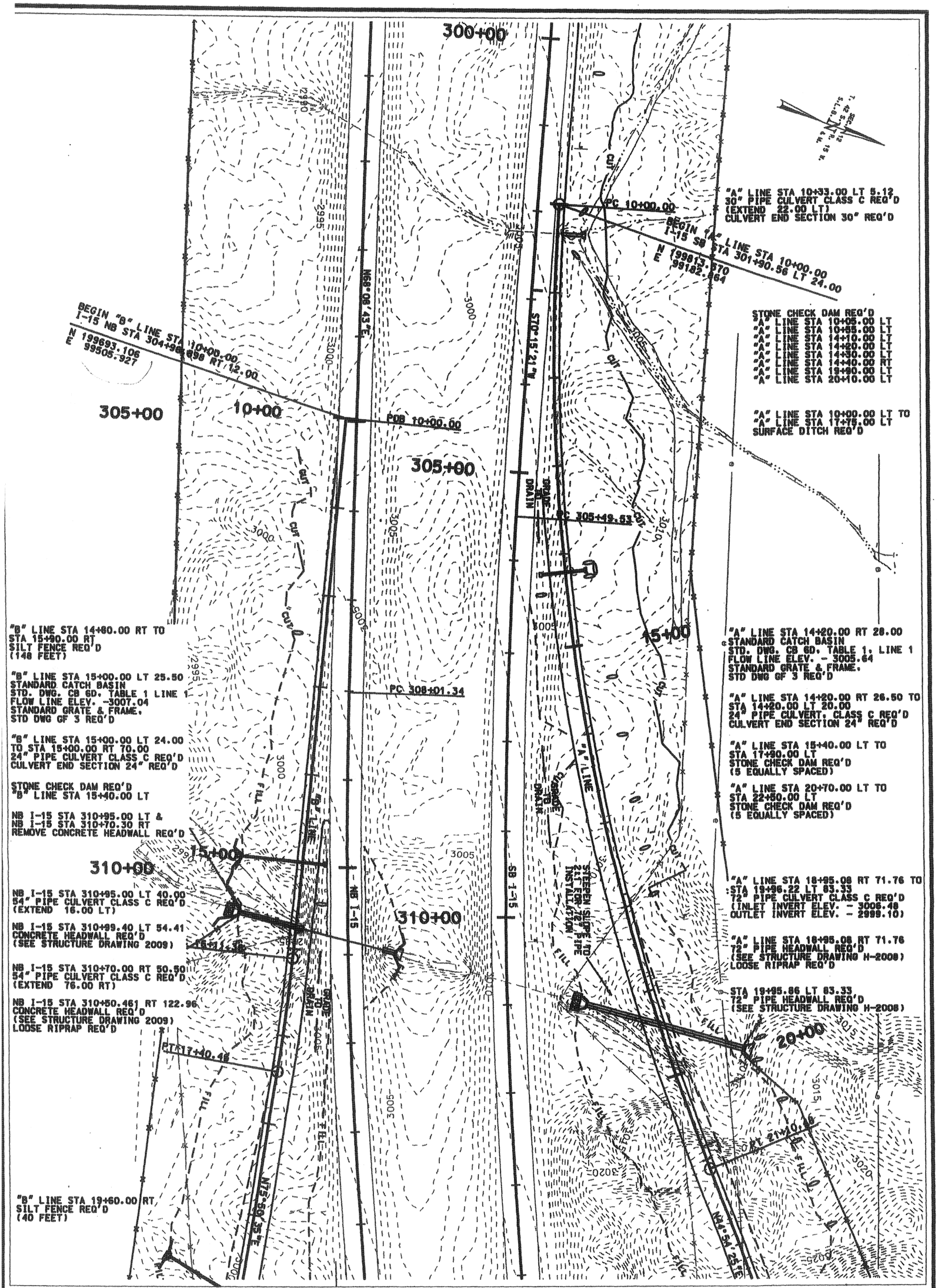

SHEET NO. DR-3	COUNTY WASHINGTON	WASHINGTON INTERCHANGE @ RP 13	UTAH DEPARTMENT OF TRANSPORTATION REGION 4 — RICHFIELD, UTAH ROADWAY DESIGN														
		DRAINAGE SHEET	ARRIVAL RECORD: DATE PROJECT DESIGN ENGINEER	DESIGN SJO 5/02	CHECK CGW 7/03	REVIEW											
				DRAWN SJO 5/02	CHECK CGW 7/03	DATE											
		PROJECT NUMBER #SP-15-1(20)13	APPROVED FOR USE BY UDOT DATE PRECONSTRUCTION ENGINEER	QUANT. SJO 5/02	CHECK CGW 7/03	BY											
							NO.	DATE	DESIGN REV. BY	MAPS (CORR. BY)	PARCELS AFFECTED	REQUEST BY	REMARKS				
							ORIGINAL SUBMISSION FOR AUTHORIZATION										
							DATE	REVISIONS									

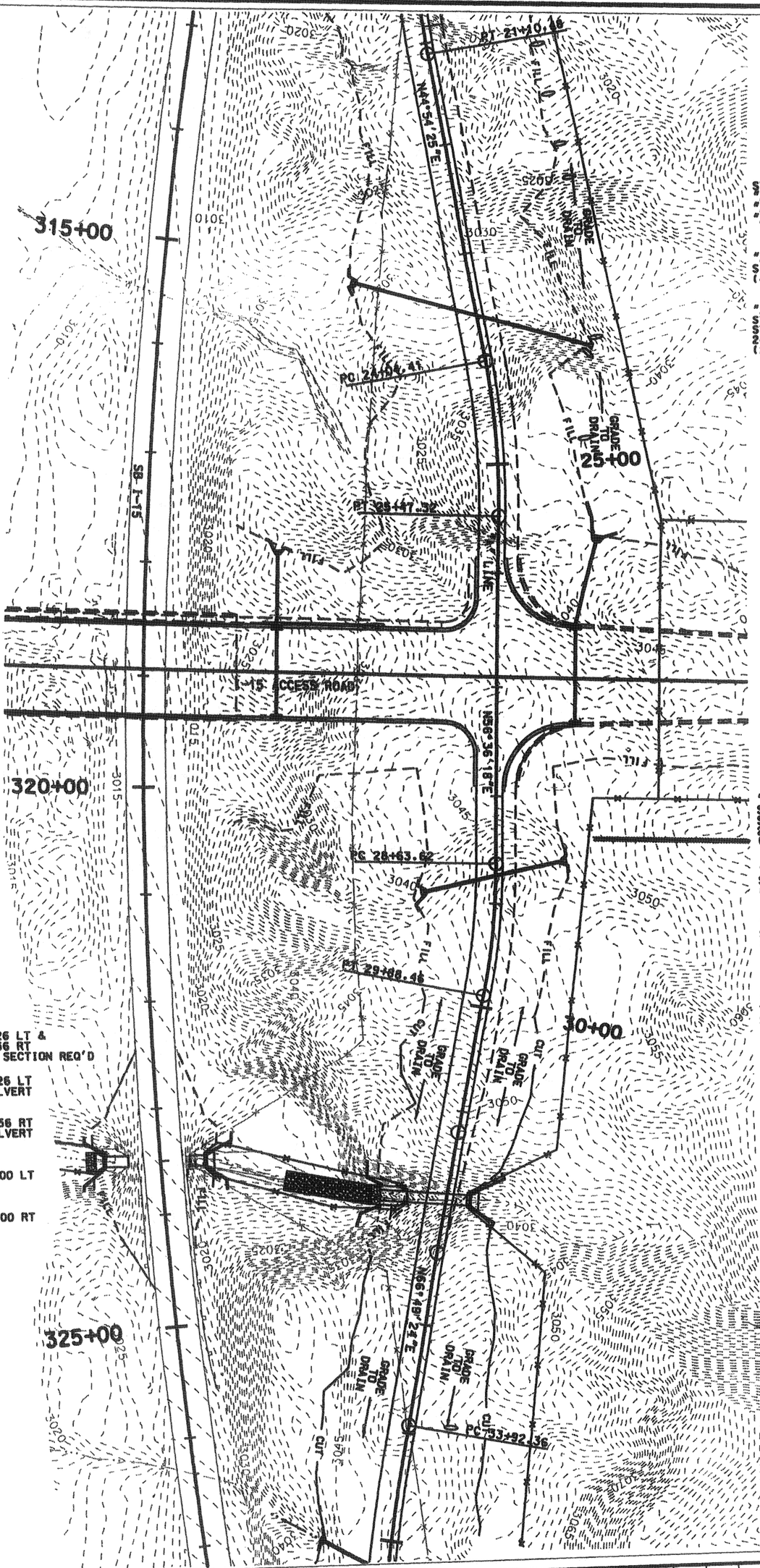

STONE CHECK DAM REQ'D
"A" LINE STA 24+00.00 LT
"A" LINE STA 24+15.00 LT
"A" LINE STA 33+90.00 LT

"A" LINE STA 23+10.00 RT
SILT FENCE REQ'D
(40 FEET)

"A" LINE
STA 23+09.46 RT 104.41 TO
STA 24+06.35 LT 96.31
24" PIPE CULVERT CLASS C REQ'D
(2) END SECTIONS 24" REQ'D

"A" LINE
STA 28+60.32 LT 61.16 TO
STA 28+93.37 RT 64.69
24" PIPE CULVERT CLASS C REQ'D
(2) END SECTIONS 24" REQ'D

"A" LINE STA 28+60.00 LT
SILT FENCE REQ'D
(30 FEET)

"A" LINE STA 28+95.00 RT
SILT FENCE REQ'D
(40 FEET)

"A" LINE STA 30+00.00 LT
TO STA 31+50.00 LT
SURFACE DITCH REQ'D

SB I-15 STA 323+51.26 LT &
SB I-15 STA 323+48.56 RT
REMOVE CONCRETE END SECTION REQ'D

SB I-15 STA 323+51.26 LT
10 X 8 CONC. BOX CULVERT
(EXTEND 16.00 LT)

SB I-15 STA 323+48.56 RT
10 X 8 CONC. BOX CULVERT
(EXTEND 23.00 RT)
LOOSE RIPRAP REQ'D

SB I-15 STA 323+50.00 LT
SILT FENCE REQ'D
(60 FEET)

SB I-15 STA 323+50.00 RT
SILT FENCE REQ'D
(70 FEET)

"A" LINE STA 31+80.00 LT
SILT FENCE REQ'D
(85 FEET)

"A" LINE STA 31+84.70
10 X 8 CONC. BOX CULVERT REQ'D
LOOSE RIPRAP REQ'D

"A" LINE STA 31+90.00 RT
SILT FENCE REQ'D
(65 FEET)

"A" LINE STA 32+00.00 LT
TO STA 45+32.36 LT
SURFACE DITCH REQ'D

SHEET NO. DR-1

WASHINGTON COUNTY

WASHINGTON INTERCHANGE @ RP 13

DRAINAGE SHEET

PROJECT NUMBER #SP-15-1(20)13

UTAH DEPARTMENT OF TRANSPORTATION

REGION 4 — RICHFIELD, UTAH

ROADWAY DESIGN

APPROVAL RECOMM. _____ DATE _____ PROJECT DESIGN ENGINEER

APPROVED FOR USE BY UDOT _____ DATE _____ PRECONSTRUCTION ENGINEER

DESIGN	SJO	5/02	CHECK	CGW	7/03
DRAWN	SJO	5/02	CHECK	CGW	7/03
QUANT.	SJO	5/02	CHECK	CGW	7/03

REVIEW

DATE _____

BY _____

NO.	DATE	DESIGN REV. BY	MAPS CHKD. BY	PARCEL APPROVED	REQUEST BY	REMARKS
						ORIGINAL SUBMISSION FOR AUTHORIZATION

DATE REVISIONS

3" LINE STA 19+61.35 RT 85.62 TO
TA 20+29.00 TG 32 LT
9" PIPE CULVERT CLASS C REQ'D
2) END SECTIONS 24" REQ'D

ILT FENCE REQ'D
8" LINE STA 19+60.00 RT
40 FEET)
8" LINE STA 20+35.00 LT
20 FEET)
8" LINE STA 22+65.00 RT
30 FEET)
8" LINE STA 23+35.00 LT
25 FEET)

"B" LINE STA 22+66.81 RT 114.54
TO STA 23+34.73 LT 89.19
24" PIPE CULVERT CLASS C REQ'D
(2) END SECTIONS 24" REQ'D

"B" LINE STA 26+30.00 LT TO
STA 27+15.00 LT
SILT FENCE REQ'D
(100 FEET)

"B" LINE STA 26+97.98 LT 95.30 TO
STA 27+72.69 RT 101.10
24" PIPE CULVERT CLASS C REQ'D
(2) END SECTIONS 24" REQ'D

NB I-15 STA 323+31.70 RT
10 X 8 CONC. BOX CULVERT
(EXTEND 212.50 RT)
LOOSE RIP RAP REQ'D

SILT FENCE REQ'D
"B" LINE STA 29+10.00 RT
(110 FEET)
"B" LINE STA 32+70.00 RT
(75 FEET)

"B" LINE STA 32+89.60 LT 33.21 TO
STA 32+74.16 RT 35.07
24" PIPE CULVERT CLASS C REQ'D
(EXTEND TO.00)
END SECTIONS 24" REQ'D

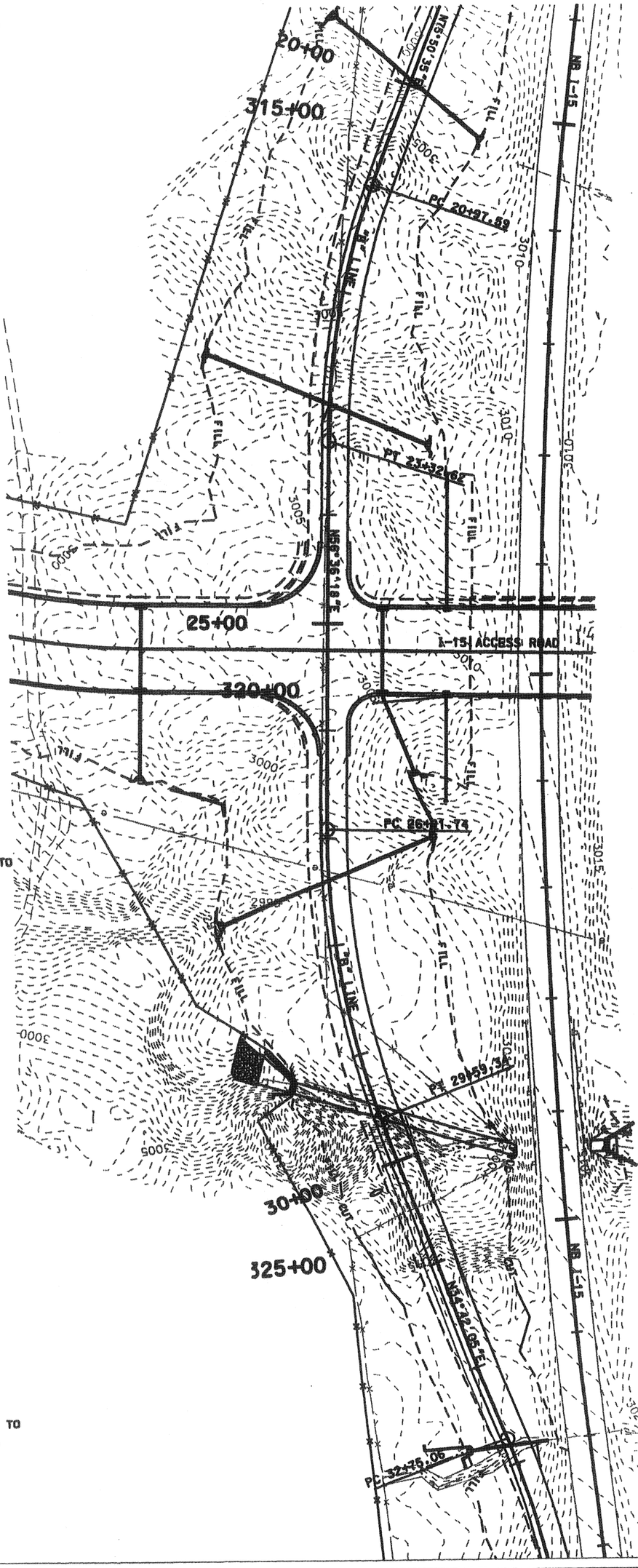

315+00

320+00

NB I-15 STA 324+32.40 LT &
NB I-15 STA 324+31.70 RT
REMOVE CONCRETE HEADWALL REQ'D

NB I-15 STA 324+32.40 LT
10 X 8 CONC. BOX CULVERT
(EXTEND 17.00 LT)

NB I-15 STA 324+30.00 LT
SILT FENCE REQ'D
(80 FEET)

325+00

WASHINGTON INTERCHANGE @ RP 13

ROADWAY PLAN SHEET

PROJECT NUMBER #SP-15-1(20)13

SHEET NO. DR-5

WASHINGTON COUNTY

UTAH DEPARTMENT OF TRANSPORTATION
REGION 4 — RICHFIELD, UTAH
ROADWAY DESIGN

APPROVAL RECOMM. DATE PROJECT DESIGN ENGINEER
APPROVED FOR USE BY UDOT DATE PRECONSTRUCTION ENGINEER

DESIGN SJO 5/02 CHECK CGW 7/03
DRAWN SJO 5/02 CHECK CGW 7/03
QUANT. SJO 5/02 CHECK CGW 7/03

REVIEW
DATE
BY

NO.	DATE	REMARKS
		ORIGINAL SUBMISSION FOR AUTHORIZATION

DESIGN REQ. BY | MAPS COMPL. BY | PARCELS APPROVED | REQUEST BY

DATE REVISIONS

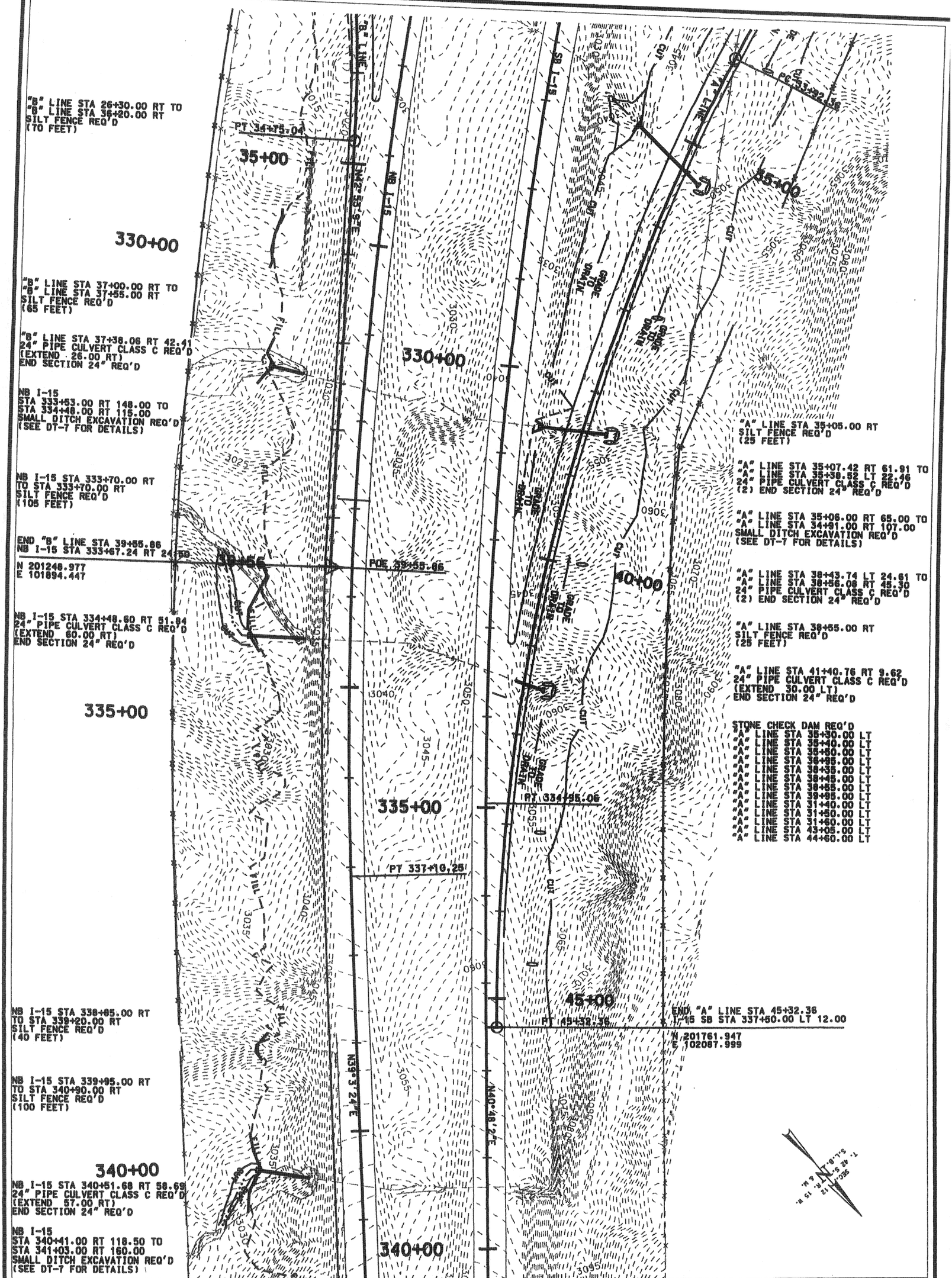

SHEET NO. DR-9	WASHINGTON COUNTY	WASHINGTON INTERCHANGE @ RP 13	UTAH DEPARTMENT OF TRANSPORTATION												
		DRAINAGE SHEET	REGION 4 — RICHFIELD, UTAH												
			ROADWAY DESIGN												
			APPROVAL RECOM. DATE PROJECT DESIGN ENGINEER	DESIGN SJO 5/02	CHECK CGW 7/03	REVIEW									
				DRAWN SJO 5/02	CHECK CGW 7/03	DATE									
		PROJECT NUMBER #SP-15-1(20)13	APPROVED FOR USE BY UDOT DATE PRECONSTRUCTION ENGINEER	QUANT. SJO 5/02	CHECK CGW 7/03	BY									
							NO.	DATE	DESIGN / MAPS REV. BY (COMP. BY) AFFECTED	PARCELS AFFECTED	REQUEST BY	REMARKS			
									ORIGINAL SUBMISSION FOR AUTHORIZATION						
							DATE		REVISIONS						

NB I-15 STA 341+85.00 RT TO
NB I-15 STA 342+25.00 RT
SILT FENCE REQ'D
(60 FEET)

NB I-15 STA 344+45.00 RT TO
NB I-15 STA 344+80.00 RT
SILT FENCE REQ'D
(45 FEET)

345+00

NB I-15 STA 345+75.00 RT TO
NB I-15 STA 346+05.00 RT
SILT FENCE REQ'D
(35 FEET)

NB I-15 STA 349+59.04 RT 64.26
24" PIPE CULVERT CLASS C REQ'D
(EXTEND 40.00 RT)
END SECTION 24" REQ'D

NB I-15 STA 349+50.00 RT 350+00
SILT FENCE REQ'D
(110 FEET)

351+81

NB I-15 RP 14.08 LT
24" PIPE CULVERT CLASS C REQ'D
2 END SECTIONS 24" REQ'D
(SEE SHEET DT-4)

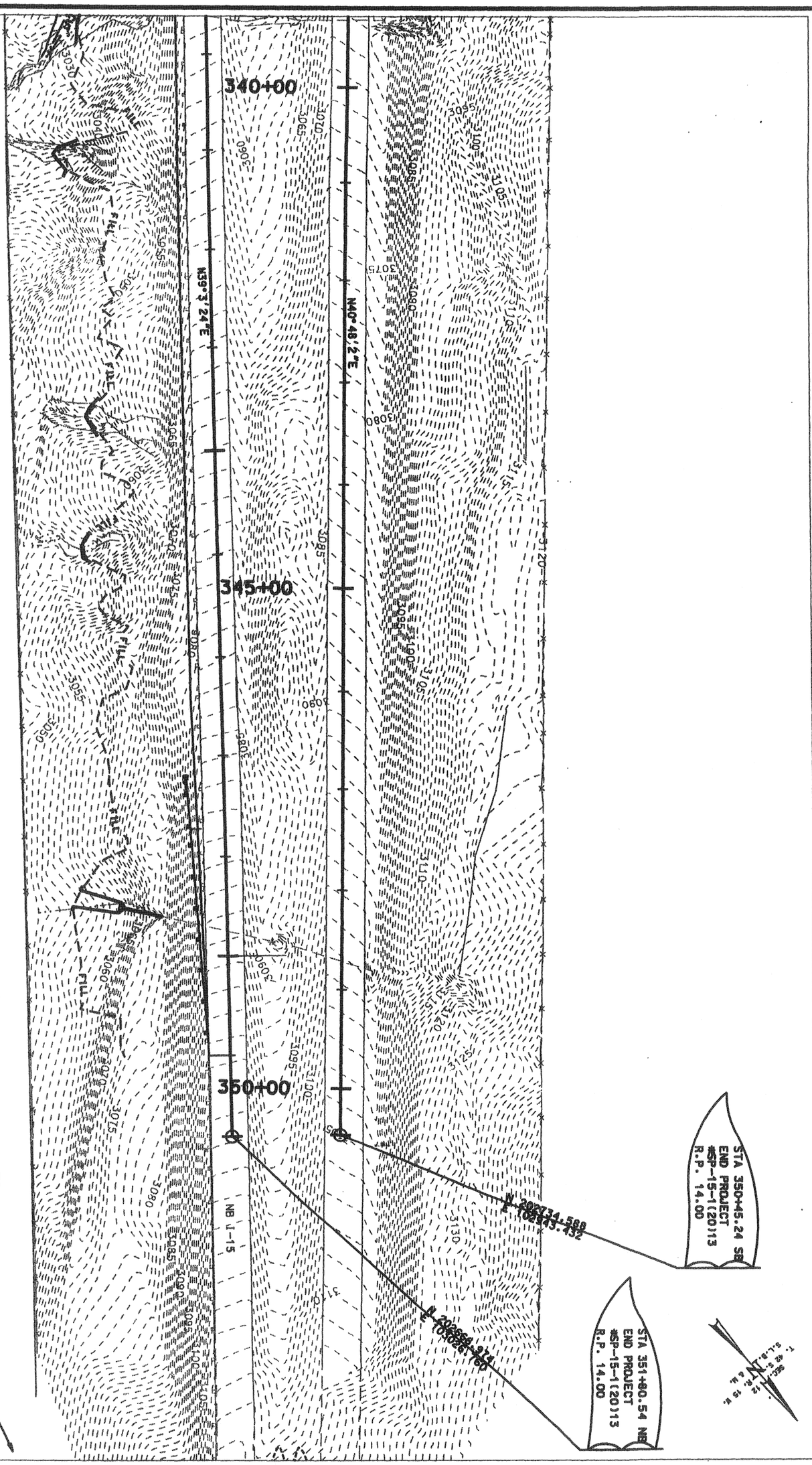

SHEET NO. DR-7	WASHINGTON COUNTY	WASHINGTON INTERCHANGE @ RP 13	UTAH DEPARTMENT OF TRANSPORTATION REGION 4 — RICHFIELD, UTAH ROADWAY DESIGN											
		DRAINAGE SHEET	APPROVAL RECOMM. DATE PROJECT DESIGN ENGINEER	DESIGN SJD 5/02	CHECK CDW 7/03	REVIEW								
				DRAWN SJD 5/02	CHECK CDW 7/03	DATE								
		PROJECT NUMBER *SP-15-1(20)13	APPROVED FOR USE BY UDOT DATE PRECONSTRUCTION ENGINEER	QUANT. SJD 5/02	CHECK CDW 7/03	BY								
							NO.	DATE	DESIGN REV. BY	MAPS COMP. BY	PARCELS AFFECTED	REQUEST BY	REMARKS	
									ORIGINAL SUBMISSION FOR AUTHORIZATION					
								DATE	REVISIONS					

STA 10+50.00 RT
SILT FENCE REQ'D
(25 FEET)

STA 10+50.00 RT 41.00 TO FL
CURB INLET CATCH BASIN
STD DWG CB 2, LINE 4
W/BICYCLE SAFE GRATE & FRAME REQ'D
INVERT ELEV = 2991.78

STA 10+50.00
18" PIPE CULVERT CLASS C REQ'D
(79' BETWEEN CATCH BASINS)

STA 13+80.00 RT
SILT FENCE REQ'D
(25 FEET)

STA 13+80.00 RT 41.00 TO FL
STANDARD CATCH BASIN
STD DWG CB 10C, COLUMN A, LINE 9
W/BICYCLE SAFE GRATE & FRAME REQ'D
INVERT ELEV = 3011.58

STA 10+50.00
18" PIPE CULVERT CLASS C REQ'D
(79' BETWEEN CATCH BASINS)

STA 13+80.00 RT 41.00 TO
STA 13+80.00 RT 121.00
18" PIPE CULVERT CLASS C REQ'D
CULVERT END SECTION 18" REQ'D

STA 14+20.00 RT TO
STA 14+75.00 RT
SILT FENCE REQ'D
(70 FEET)

STA 16+00.00 RT 39.00
CURB INLET CATCH BASIN.
STD DWG CB 2, LINE 4
W/BICYCLE SAFE GRATE & FRAME
INVERT ELEV = 3027.11

STA 16+00.00
18" PIPE CULVERT CLASS C REQ'D
(79' BETWEEN CATCH BASINS)

STA 16+00.00 RT 41.50 TO
STA 16+29.35 RT 113.77
18" PIPE CULVERT CLASS C REQ'D
CULVERT END SECTION 18" REQ'D

STA 16+58.00 RT 41.00 TO
STA 16+58.00 RT 141.00
12" CORRUGATED POLYETHYLENE
(HDPE) PIPE CULVERT, CLASS C REQ'D
CULVERT END SECTION 12" REQ'D

STA 10+00.00
BEG. I-15 ACCESS
#SP-15-1(20)13

STA 10+50.00 LT 41.00 TO FL
CURB INLET CATCH BASIN
STD DWG CB 2, LINE 8
W/BICYCLE SAFE GRATE & FRAME REQ'D
INVERT ELEV = 2990.27

STA 10+50.00 LT 41.00 TO
STA 10+50.00 LT 79.00
PIPE CULVERT CLASS C REQ'D
CULVERT END SECTION 18" REQ'D

STA 13+80.00 LT 41.00 TO FL
CURB INLET CATCH BASIN
STD DWG CB 2, LINE 3
W/BICYCLE SAFE GRATE & FRAME REQ'D
INVERT ELEV = 3012.44

STA 16+00.00 LT 41.00 TO FL
CURB INLET CATCH BASIN
STD DWG CB 2, LINE 2
W/BICYCLE SAFE GRATE & FRAME REQ'D
INVERT ELEV = 3028.11

STA 16+58.00 LT 41.00 TO
STA 16+58.00 LT 161.00
12" CORRUGATED POLYETHYLENE
(HDPE) PIPE CULVERT, CLASS C REQ'D
CULVERT END SECTION 12" REQ'D

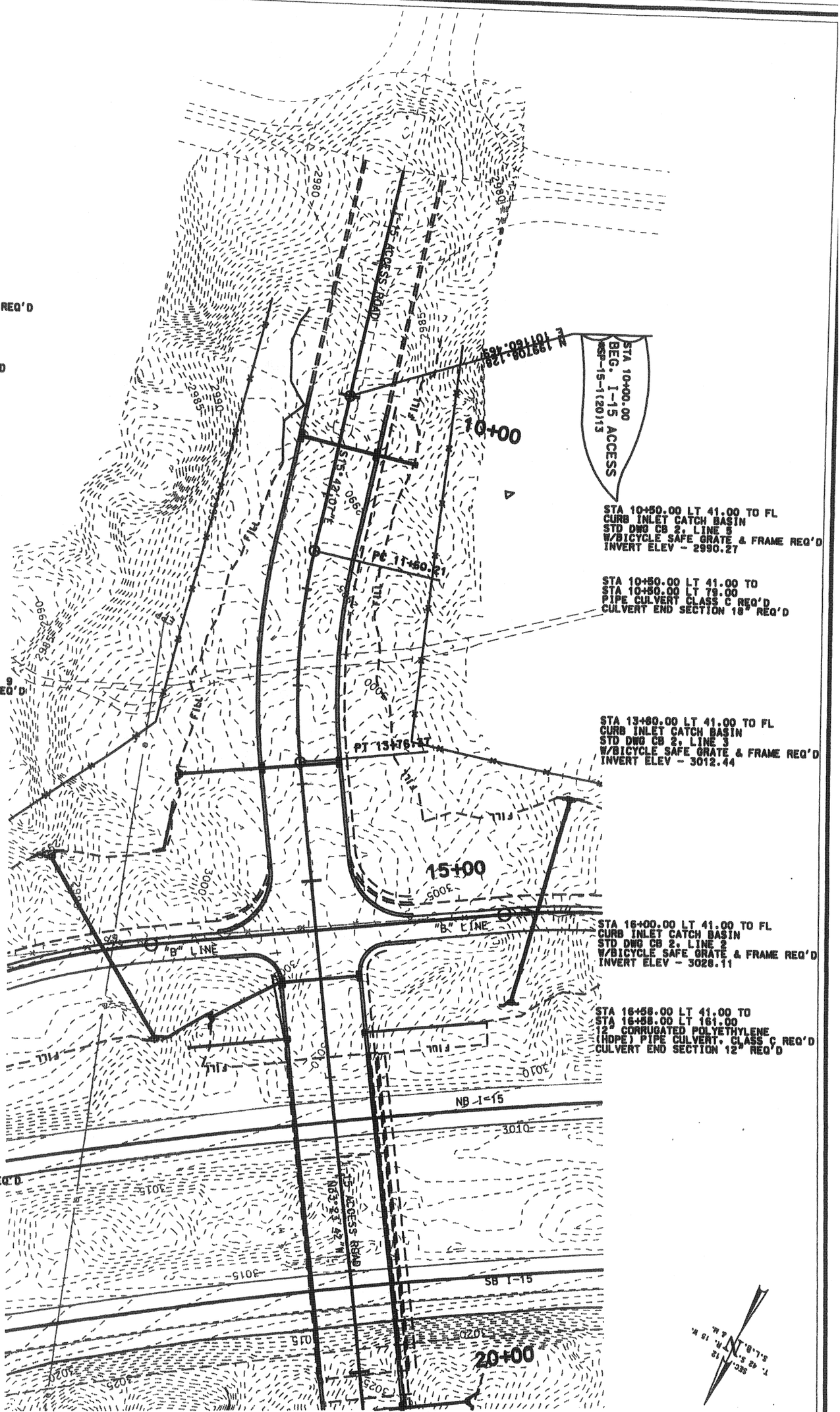

SHEET NO. DR-9	WASHINGTON COUNTY	WASHINGTON INTERCHANGE @ RP 13	UTAH DEPARTMENT OF TRANSPORTATION REGION 4 — RICHFIELD, UTAH ROADWAY DESIGN										
		DRAINAGE SHEET	APPROVAL RECOMM. DATE PROJECT DESIGN ENGINEER	DESIGN SJO 5/02	CHECK CGW 7/03	REVIEW	NO.	DATE	DESIGN REV. BY	MAPS CORR. BY	PARCELS AFFECTED	REQUEST BY	REMARKS
		PROJECT NUMBER #SP-15-1(20)13	APPROVED FOR USE BY UDOT DATE PRECONSTRUCTION ENGINEER	DRAWN SJO 5/02	CHECK CGW 7/03	DATE							ORIGINAL SUBMISSION FOR AUTHORIZATION
				QUANT. SJO 5/02	CHECK CGW 7/03	BY	DATE						REVISIONS

STA 20+40.00 RT 41.00 TO FL
CURB INLET CATCH BASIN.
STD DWG CB 2, LINE 3
W/BICYCLE SAFE GRATE & FRAME
INVERT ELEV - 3046.41

STA 20+40.00
18" PIPE CULVERT CLASS C REQ'D
(79' BETWEEN CATCH BASINS)

STA 23+25.00 RT 40.61 TO FL
CURB INLET CATCH BASIN.
STD DWG CB 2, LINE 3
W/BICYCLE SAFE GRATE & FRAME
INVERT ELEV - 3056.70

STA 23+25.00
18" PIPE CULVERT CLASS C REQ'D
(84' BETWEEN CATCH BASINS)

STONE CHECK DAM REQ'D
STA 23+90.00 RT
STA 25+45.00 RT
STA 27+00.00 LT
STA 29+30.00 RT
STA 30+75.00 RT

STA 26+00.00 RT TO
STA 29+40.00 RT
SURFACE DITCH REQ'D

STA 29+44.30 LT 97.98 TO
STA 30+62.27 RT 83.30
72" PIPE CULVERT CLASS C REQ'D
(INLET INVERT ELEV. - 3045.97
OUTLET INVERT ELEV. - 3040.28)

STA 30+62.27 RT 83.30
CONCRETE HEADWALL REQ'D
(SEE STRUCTURE DRAWING H-2008)

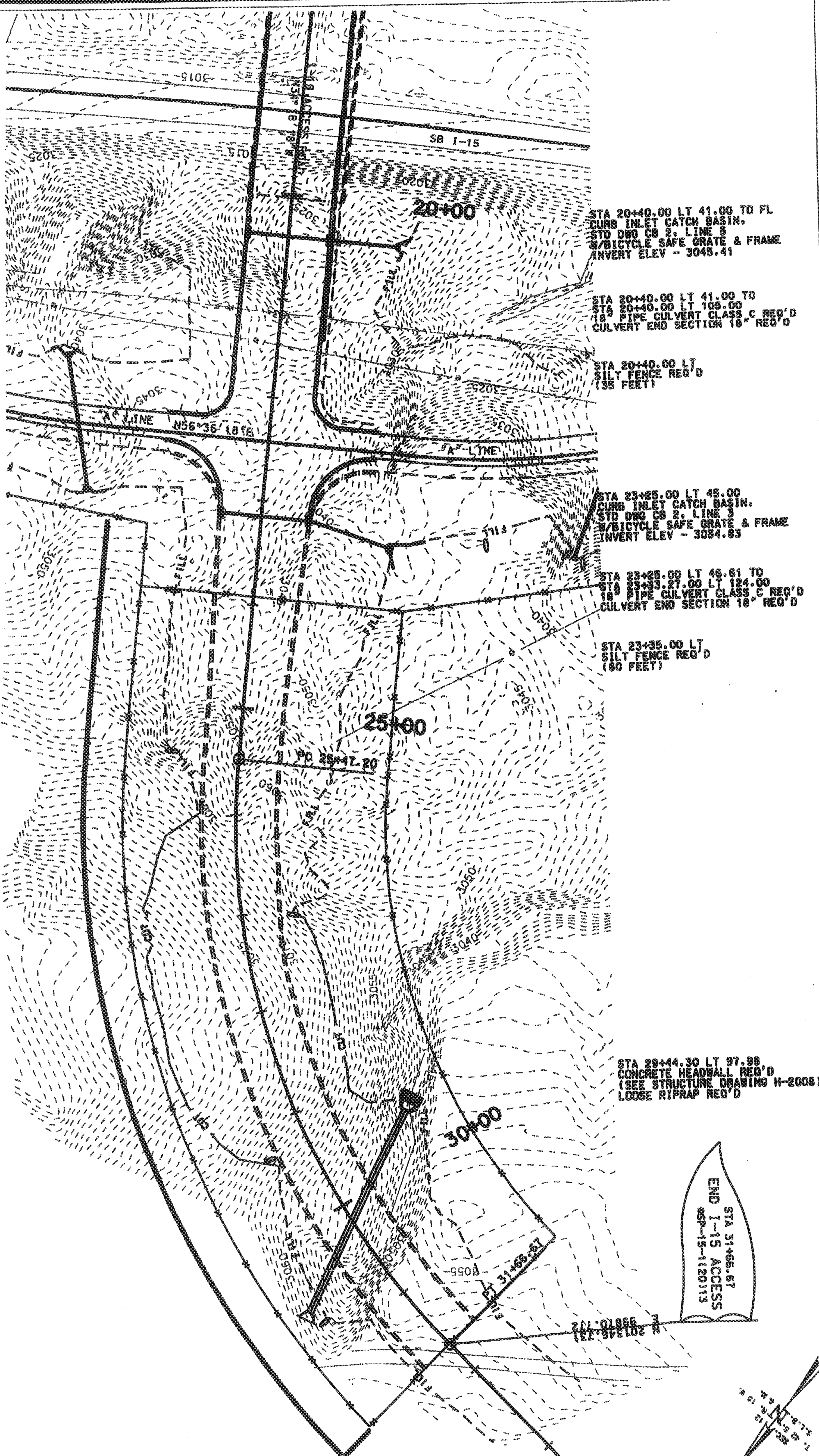

STA 20+40.00 LT 41.00 TO FL
CURB INLET CATCH BASIN.
STD DWG CB 2, LINE 5
W/BICYCLE SAFE GRATE & FRAME
INVERT ELEV - 3045.41

STA 20+40.00 LT 41.00 TO
STA 20+40.00 LT 105.00
18" PIPE CULVERT CLASS C REQ'D
CULVERT END SECTION 18" REQ'D

STA 20+40.00 LT
SILT FENCE REQ'D
(35 FEET)

STA 23+25.00 LT 45.00
CURB INLET CATCH BASIN.
STD DWG CB 2, LINE 3
W/BICYCLE SAFE GRATE & FRAME
INVERT ELEV - 3054.83

STA 23+25.00 LT 46.61 TO
STA 23+33.27.00 LT 124.00
18" PIPE CULVERT CLASS C REQ'D
CULVERT END SECTION 18" REQ'D

STA 23+35.00 LT
SILT FENCE REQ'D
(60 FEET)

STA 29+44.30 LT 97.98
CONCRETE HEADWALL REQ'D
(SEE STRUCTURE DRAWING H-2008)
LOOSE RIPRAP REQ'D

STA 31+66.67
END I-15 ACCESS
#SP-15-1(20)13

N 201346.731
E 996070.472

WASHINGTON INTERCHANGE @ RP 13

DRAINAGE SHEET

UTAH DEPARTMENT OF TRANSPORTATION
REGION 4 — RICHFIELD, UTAH
ROADWAY DESIGN

APPROVAL RECOMM. DATE PROJECT DESIGN ENGINEER	DESIGN SJO 5/02	CHECK CGW 7/03	REVIEW
APPROVED FOR USE BY UDOT DATE PRECONSTRUCTION ENGINEER	DRAWN SJO 5/02	CHECK CGW 7/03	DATE
	QUANT. SJO 5/02	CHECK CGW 7/03	BY

NO.	DATE	DESIGN REV. BY	MAPS CORR. BY	PARCELS AFFECTED	REQUEST BY	REMARKS
						ORIGINAL SUBMISSION FOR AUTHORIZATION
	DATE					REVISIONS

WASHINGTON COUNTY

PROJECT NUMBER #SP-15-1(20)13

SHEET NO. DR-9

I-15 SB STA 274+00.00 LT
SIGN TYPE P-2
(R2-1 48"X60"), REQ'D

I-15 SB STA 284+00.00 LT
SIGN TYPE P-2 REQ'D
(M3-3 30"X15" & M1-1 36"X36")

STA 284+50.00 SB
BEGIN PROJECT
#SP-15-1(20)13
R.P. 12.73

N 199202.984
E 97552.140

I-15 SB STA 284+50.00
BEGIN PAVEMENT MARKING PAINT REQ'D

I-15 SB LANE TAPER
STA 285+00.00 TO STA 288+40.00

I-15 SB
STA 285+00.00 TO STA 303+00.00
REMOVE PAVEMENT MARKINGS REQ'D
(SOLID WHITE LINE ONLY)
BEGIN DELINEATOR TYPE II, REQ'D
BEGIN CULVERT MARKER REQ'D

T. 42 S. SEC. 12
S.L.B. & M. R. 15 W.

SPEED LIMIT 75

SOUTH

INTERSTATE 15

10'
12'
12'
4'
6'
24'
12'
4'

4" SOLID YELLOW
4" WHITE BROKEN LINE
4" SOLID WHITE

284+50

290+00

STA 285+01.64 NB
BEGIN PROJECT
#SP-15-1(20)13
R.P. 12.73

N 199961.499
E 97649.594

4'
12'
12'
10'

4" SOLID YELLOW
4" WHITE BROKEN LINE
4" SOLID WHITE

RP 12.11 NB I-15

EXIT 13
Washington City
1 MILE

RP 12.61 NB I-15

EXIT 13
Washington City
½ MILE

I-15 NB R.P. 12.11 RT
SIGN TYPE P-2 REQ'D
(E6-2)

I-15 NB R.P. 12.61 RT
SIGN TYPE P-2 REQ'D
(E6-2)

285+02

I-15 NB STA 285+01.64
BEGIN PAVEMENT MARKING PAINT
REQ'D

290+00

UTAH DEPARTMENT OF TRANSPORTATION
REGION 4 — RICHFIELD, UTAH
ROADWAY DESIGN

NO.	DATE	REVISION AND/OR CORRECTION REQUESTED	MAP, PLANS, PARCELS, PRELIMINARY OR FINAL	REMARKS
		ORIGINAL SUBMISSION FOR AUTHORIZATION		

REVISIONS

DESIGN SJO 5/02	CHECK CGW 7/03	REVIEW	
DRAWN SJO 5/02	CHECK CGW 7/03	DATE	
QUANT. SJO 5/02	CHECK CGW 7/03	BY	

RECOMMENDED FOR APPROVAL REGIONAL DIRECTOR — DATE
PROJECT DESIGN ENGINEER — DATE
APPROVED FOR USE BY UDOT — PRECONSTRUCTION ENGINEER — DATE

WASHINGTON INTERCHANGE @ RP 13

SIGNING & STRIPING SHEET

PROJECT NUMBER #SP-15-1(20)13

WASHINGTON COUNTY

SHEET NO. SS-1

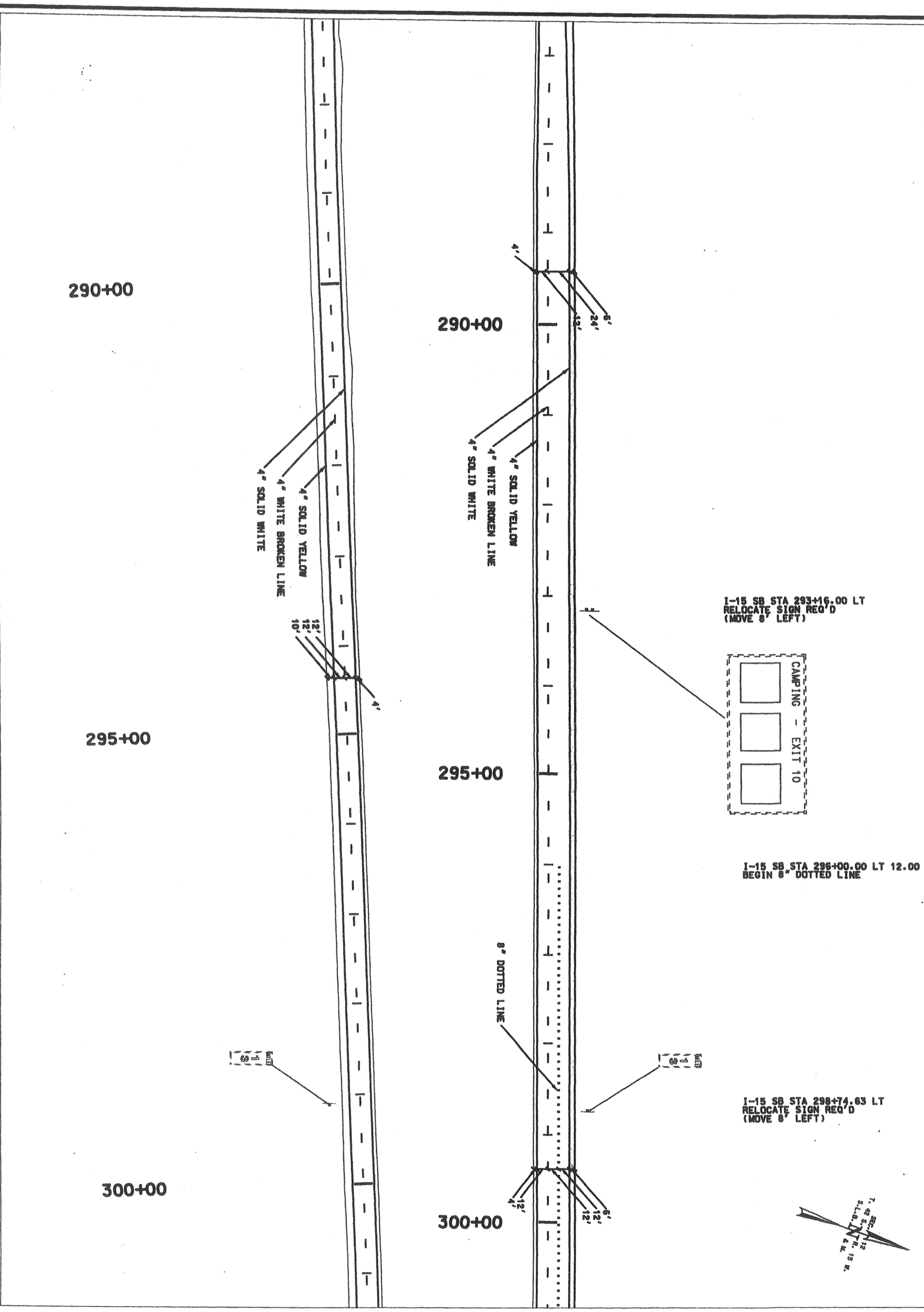

WASHINGTON INTERCHANGE @ RP 13

SIGNING & STRIPING SHEET

PROJECT NUMBER #SP-15-1(20)13

WASHINGTON COUNTY

SHEET NO. SS-2

UTAH DEPARTMENT OF TRANSPORTATION
REGION 4 -- RICHFIELD, UTAH
ROADWAY DESIGN

APPROVAL RECOMD. DATE PROJECT DESIGN ENGINEER	DESIGN SJO 5/02	CHECK CGW 7/03	REVIEW
APPROVED FOR USE BY UDOT DATE PRECONSTRUCTION ENGINEER	DRAWN SJO 5/02	CHECK CGW 7/03	DATE
	QUANT. SJO 5/02	CHECK CGW 7/03	BY

NO.	DATE	DESIGN REV.BY	MAPS CORR.BY	PARCELS AFFECTED	REQUEST BY	REMARKS
		ORIGINAL SUBMISSION FOR AUTHORIZATION				
DATE		REVISIONS				

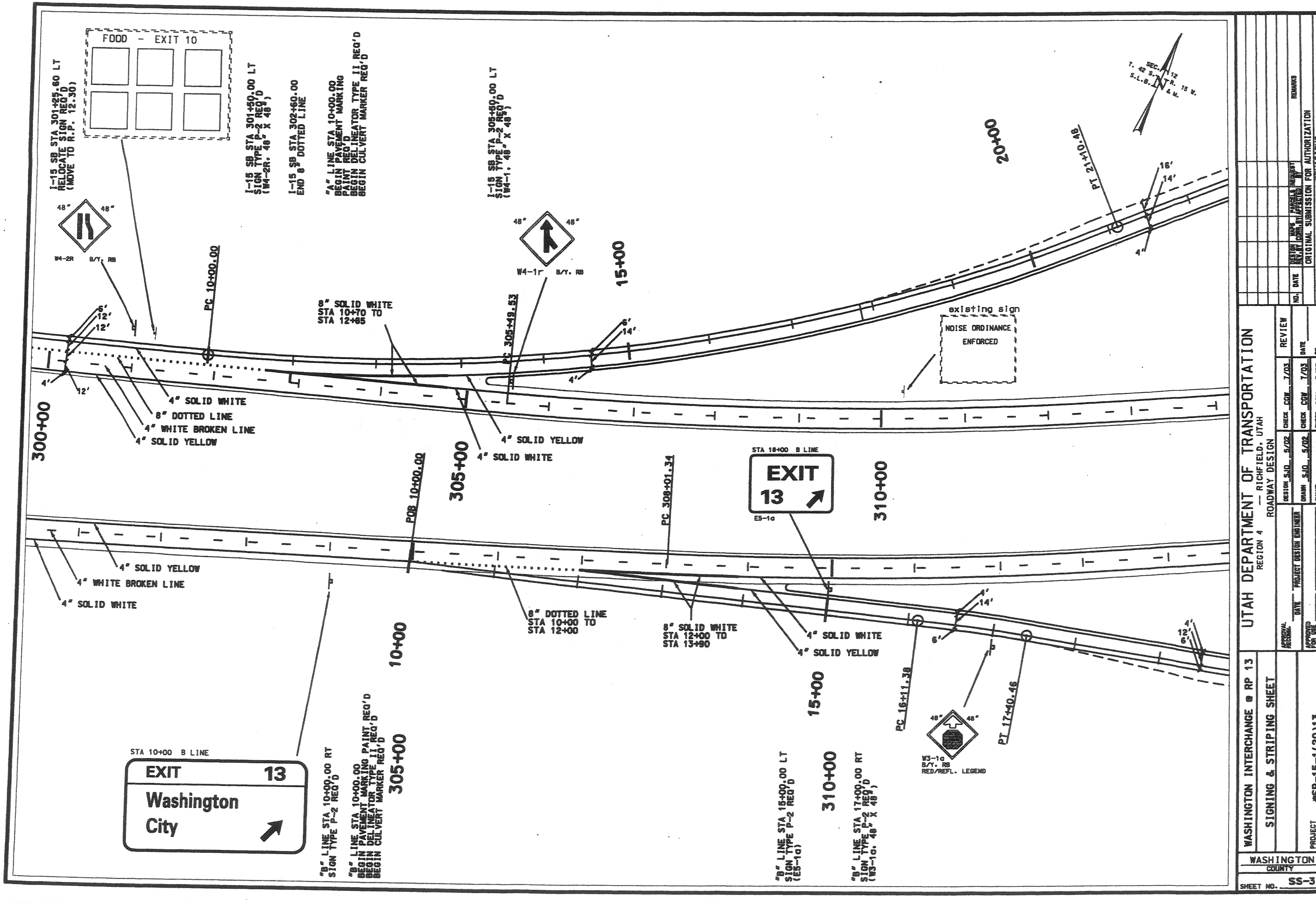
FOOD - EXIT 10
I-15 SB STA 301+25.60 LT
RELOCATE SIGN REQ'D
(MOVE TO R.P. 12.30)
I-15 SB STA 301+60.00 LT
SIGN TYPE P-2 REQ'D
(W4-2R, 48" X 48")
I-15 SB STA 302+60.00
END 8" DOTTED LINE
"A" LINE STA 10+00.00
BEGIN PAVEMENT MARKING
PAINT REQ'D
BEGIN DELINEATOR TYPE II REQ'D
BEGIN CULVERT MARKER REQ'D
I-15 SB STA 305+60.00 LT
SIGN TYPE P-2 REQ'D
(W4-1, 48" X 48")
SEC. 12
T. 42 S. R. 15 W.
S.L.B. & M.
20+00
PT 21+10.48
16'
14'
4'
48"
48"
W4-2R
B/Y. RB
48"
48"
W4-1r
B/Y. RB
15+00
PC 10+00.00
8" SOLID WHITE
STA 10+70 TO
STA 12+65
PC 305+49.53
6'
14'
4'
existing sign
NOISE ORDINANCE
ENFORCED
6'
12'
12'
4'
12'
4" SOLID WHITE
8" DOTTED LINE
4" WHITE BROKEN LINE
4" SOLID YELLOW
4" SOLID YELLOW
4" SOLID WHITE
300+00
305+00
POB 10+00.00
PC 308+01.34
STA 18+00 B LINE
EXIT
13
E5-1a
310+00
4" SOLID YELLOW
4" WHITE BROKEN LINE
4" SOLID WHITE
8" DOTTED LINE
STA 10+00 TO
STA 12+00
8" SOLID WHITE
STA 12+00 TO
STA 13+90
4" SOLID WHITE
4" SOLID YELLOW
4'
14'
6'
4'
12'
6'
10+00
15+00
PC 16+11.38
PT 17+40.46
48"
48"
W3-1a
B/Y. RB
RED/REFL. LEGEND
STA 10+00 B LINE
EXIT 13
Washington
City
"B" LINE STA 10+00.00 RT
SIGN TYPE P-2 REQ'D
"B" LINE STA 10+00.00
BEGIN PAVEMENT MARKING PAINT REQ'D
BEGIN DELINEATOR TYPE II REQ'D
BEGIN CULVERT MARKER REQ'D
305+00
"B" LINE STA 15+00.00 LT
SIGN TYPE P-2 REQ'D
(E5-1a)
310+00
"B" LINE STA 17+00.00 RT
SIGN TYPE P-2 REQ'D
(W3-1a, 48" X 48")
UTAH DEPARTMENT OF TRANSPORTATION
REGION 4 — RICHFIELD, UTAH
ROADWAY DESIGN
DESIGN SJO 5/02 CHECK CGW 7/03
DRAWN SJO 5/02 CHECK CGW 7/03
QUANT. SJO 5/02 CHECK CGW 7/03
REVIEW
PROJECT DESIGN ENGINEER DATE
PRECONSTRUCTION ENGINEER DATE
ORIGINAL SUBMISSION FOR AUTHORIZATION
REVISIONS
REMARKS
WASHINGTON INTERCHANGE @ RP 13
SIGNING & STRIPING SHEET
PROJECT NUMBER #SP-15-1(20)13
WASHINGTON COUNTY
SHEET NO. SS-3

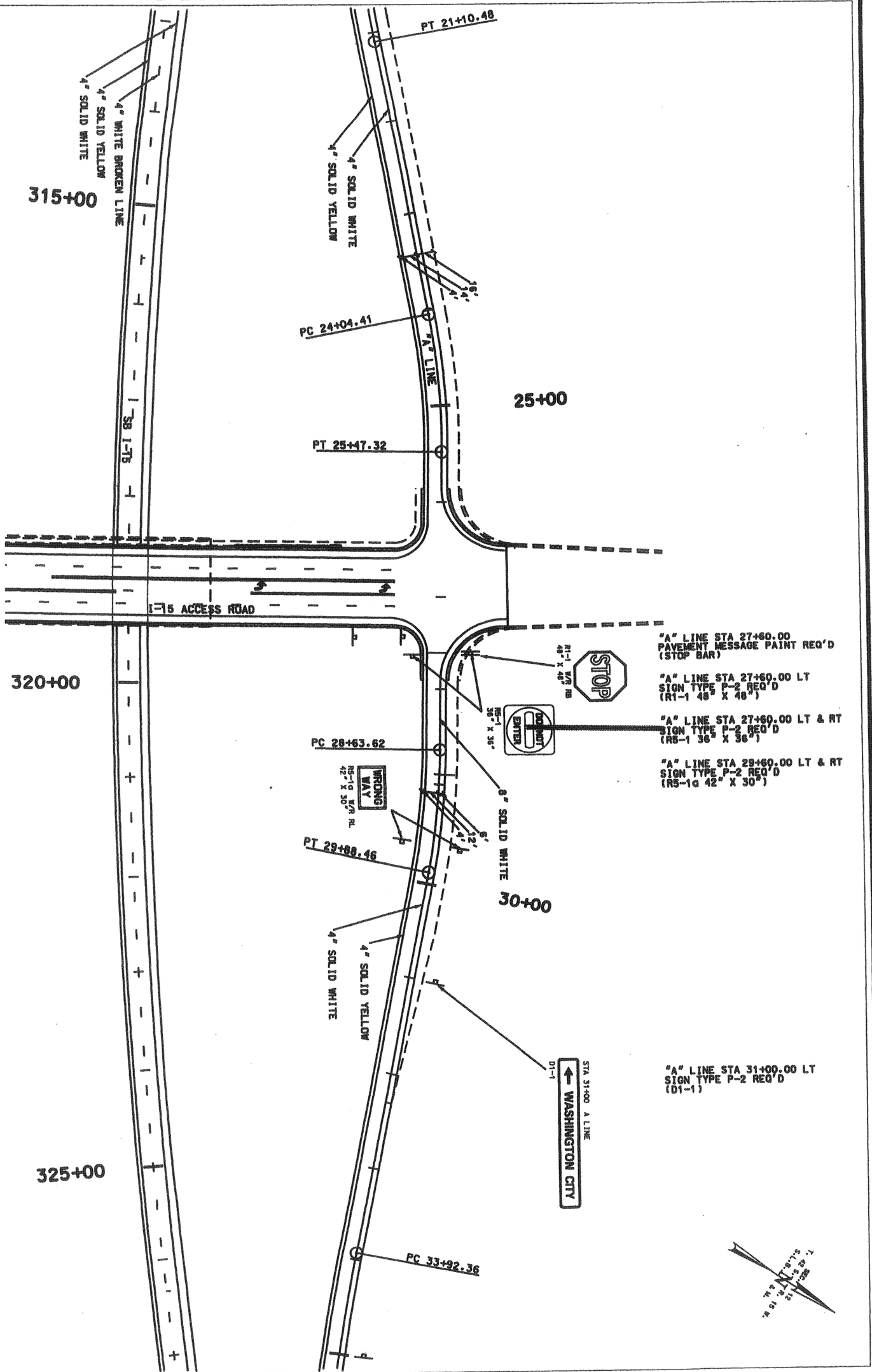

SHEET NO. SS-4	WASHINGTON COUNTY	WASHINGTON INTERCHANGE @ RP 13	UTAH DEPARTMENT OF TRANSPORTATION				
		SIGNING & STRIPING SHEET	REGION 4 — RICHFIELD, UTAH				
			ROADWAY DESIGN				
			APPROVAL RECOMM. DATE PROJECT DESIGN ENGINEER	DESIGN SJO 5/02	CHECK CGW 7/03	REVIEW	
				DRAWN SJO 5/02	CHECK CGW 7/03	DATE	
		PROJECT NUMBER *SP-15-1(20)13	APPROVED FOR USE BY UDOT DATE PRECONSTRUCTION ENGINEER	QUANT. SJO 5/02	CHECK CGW 7/03	BY	

NO.	DATE	DESIGN REV. BY	MAPS (CORR. BY)	PARCELS AFFECTED	REQUEST BY	REMARKS
		ORIGINAL SUBMISSION FOR AUTHORIZATION				
	DATE	REVISIONS				

"B" LINE STA 20+50.00 RT
SIGN TYPE P-2 REQ'D
(D1-1)

"A" LINE STA 22+55.00 LT & RT
SIGN TYPE P-2 REQ'D
(R5-1a 42" X 30")

"B" LINE STA 23+65.00
PAVEMENT MESSAGE PAINT REQ'D (2)
(LEFT/THROUGH ARROW RIGHT ARROW)

"B" LINE STA 24+45.00
PAVEMENT MESSAGE PAINT REQ'D (3)
(LEFT/THROUGH ARROW RIGHT ARROW)

"A" LINE STA 24+55.00 LT & RT
SIGN TYPE P-2 REQ'D
(R5-1 36" X 36")

"B" LINE STA 24+55.00 RT
SIGN TYPE P-2 REQ'D
(R1-1a 48" X 48")

"B" LINE STA 24+55.00
PAVEMENT MESSAGE PAINT REQ'D (4)
(STOP BAR)

NB I-15 STA 327+90.00 RT
SIGN TYPE P-2 REQ'D
(W4-1r 48" X 48")

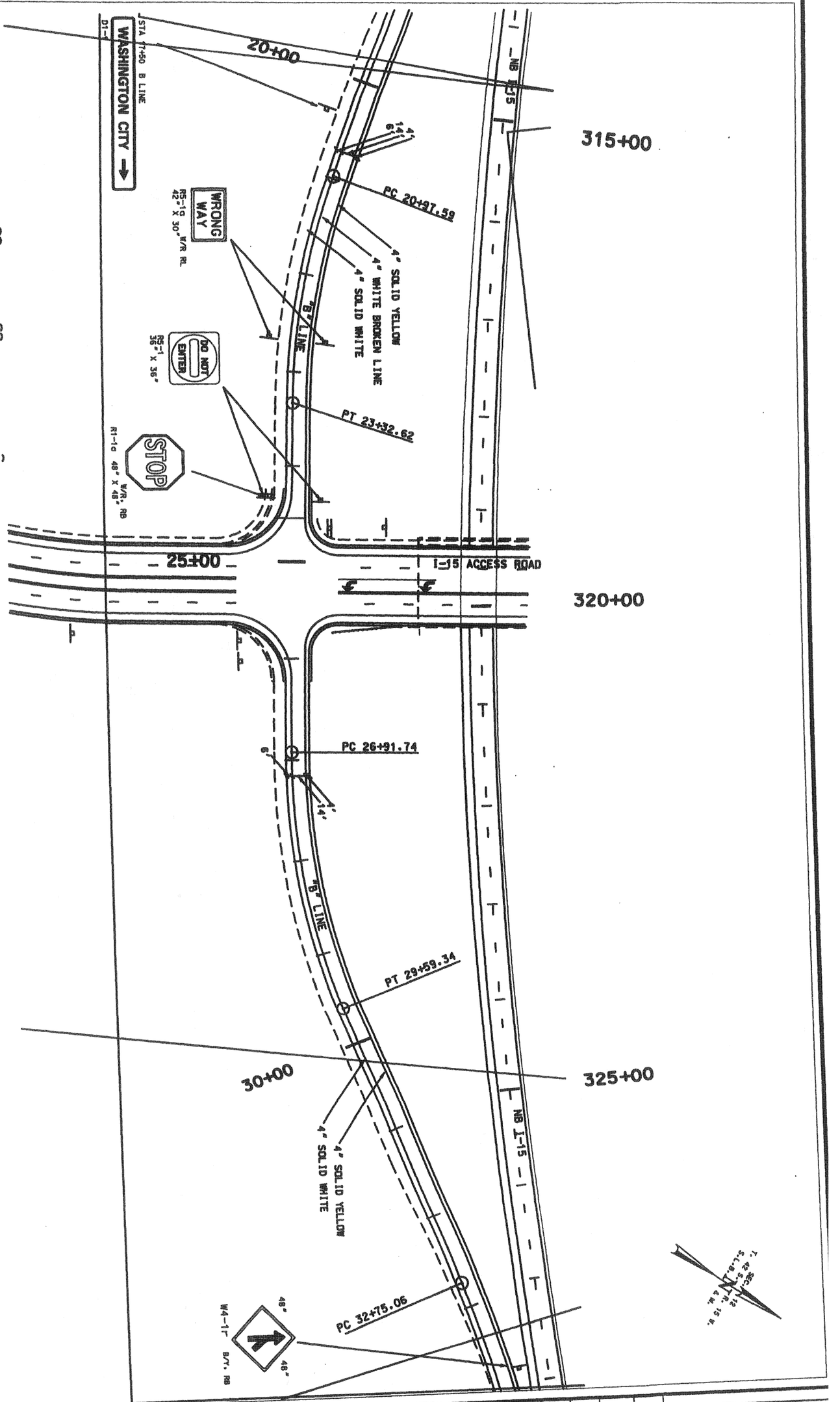

SHEET NO. SS-5	WASHINGTON COUNTY	WASHINGTON INTERCHANGE @ RP 13	UTAH DEPARTMENT OF TRANSPORTATION — REGION 4 — RICHFIELD, UTAH				
		SIGNING & STRIPING SHEET	ROADWAY DESIGN				
			APPROVAL RECOMM. DATE PROJECT DESIGN ENGINEER	DESIGN SJO 5/02	CHECK CGW 7/03	REVIEW	
				DRAWN SJO 5/02	CHECK CGW 7/03	DATE	
			APPROVED FOR USE BY UDOT DATE PRECONSTRUCTION ENGINEER	QUANT. SJO 5/02	CHECK CGW 7/03	BY	
		PROJECT NUMBER #SP-15-1(20)13					

NO.	DATE	REVISION	MAPS REV. BY	PARCELS CORR. BY	REQUEST APPROVED	REQUEST BY	REMARKS
		ORIGINAL SUBMISSION FOR AUTHORIZATION					
	DATE	REVISIONS					

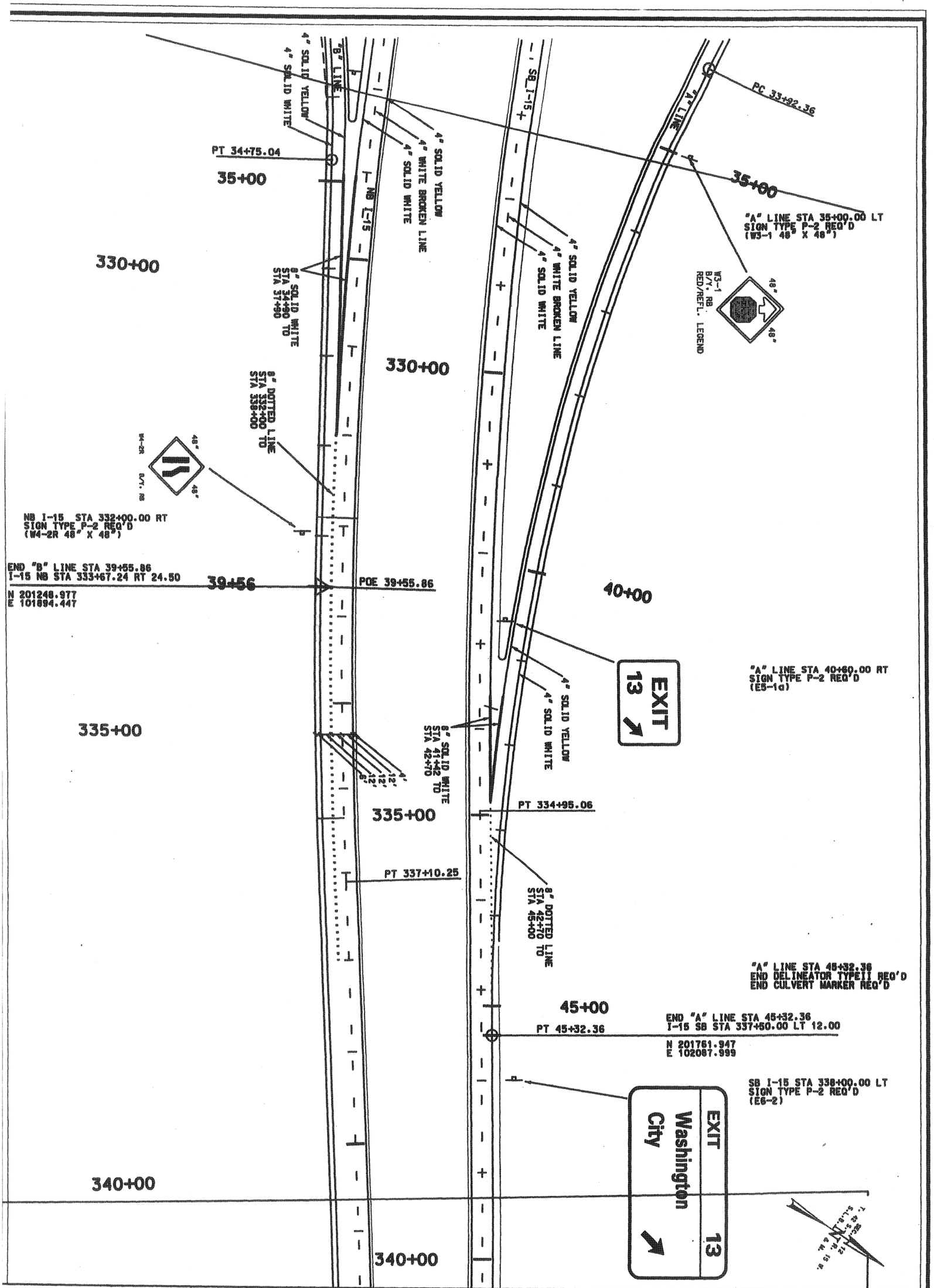

SHEET NO. SS-6

WASHINGTON COUNTY

WASHINGTON INTERCHANGE @ RP 13

SIGNING & STRIPING SHEET

PROJECT NUMBER *SP-15-1(20)13

UTAH DEPARTMENT OF TRANSPORTATION

REGION 4 — RICHFIELD, UTAH

ROADWAY DESIGN

APPROVAL RECOMM. ____ DATE ____ PROJECT DESIGN ENGINEER

APPROVED FOR USE BY UDOT ____ DATE ____ PRECONSTRUCTION ENGINEER

DESIGN SJO 5/02 CHECK CGW 7/03 REVIEW

DRAWN SJO 5/02 CHECK CGW 7/03 DATE

QUANT. SJO 5/02 CHECK CGW 7/03 BY

NO.	DATE	DESIGN REV. BY	MAPS CORR. BY	PARCELS AFFECTED	REQUEST BY	REMARKS
						ORIGINAL SUBMISSION FOR AUTHORIZATION

DATE REVISIONS

SEC. 18 T. 42 S. R. 15 W. S.L.B. & M.

I-15 SB STA 350+45.24
END PAVEMENT MARKING PAINT REQ'D

STA 350+45.24 SB
END PROJECT
#SP-15-1(20)13
R.P. 14.00

STA 351+80.54 NB
END PROJECT
#SP-15-1(20)13
R.P. 14.00

N 200734.588
E 1029345.432

N 200566.971
E 1030026.160

POE 350+45.24

RP 14.75 SB I-15

EXIT 13
Washington City
1 MILE

I-15 SB R.P. 14.25 LT
SIGN TYPE P-2 REQ'D

RP 14.25 SB I-15

EXIT 13
Washington City
½ MILE

I-15 SB R.P. 14.75 LT
SIGN TYPE P-2 REQ'D

SB I-15

N40°48'2"E

4" SOLID YELLOW
4" WHITE BROKEN LINE
4" SOLID WHITE

340+00

345+00

350+00

N39°3'24"E

4' 12' 12'

12" 6"

4" SOLID YELLOW
4" WHITE BROKEN LINE
4" SOLID WHITE

NB I-15

POE 351+80.54

30" 15" NORTH M3-3

30" INTERSTATE 15 M1-1(15)

48" SPEED LIMIT 75 60" R2-1a

345+00

I-15 NB LANE TAPER
STA 347+50.00 TO STA 351+80.54

350+00

I-15 NB STA 351+80.54
END PAVEMENT MARKING PAINT REQ'D
END DELINEATOR TYPE II REQ'D
END CULVERT MARKER REQ'D

I-15 SB STA 351+91.00 RT
RELOCATE SIGN REQ'D
(MOVE 8' RIGHT)

351+81

I-15 NB STA 352+00.00 RT
SIGN TYPE P-2 REQ'D
(M3-3 30"X15" & M1-1 36"X36")

I-15 NB STA 362+00.00 RT
SIGN TYPE P-2 REQ'D
(R2-1 48"X60")

UTAH DEPARTMENT OF TRANSPORTATION
REGION 4 — RICHFIELD, UTAH
ROADWAY DESIGN

WASHINGTON INTERCHANGE @ RP 13
SIGNING & STRIPING SHEET

PROJECT NUMBER #SP-15-1(20)13

WASHINGTON COUNTY

SHEET NO. SS-7

NO.	DATE	REVISIONS	BY	APPROVED
		ORIGINAL SUBMISSION FOR AUTHORIZATION		

DESIGN S.JO 5/02 CHECK CGM 7/03 REVIEW
DRAWN S.JO 5/02 CHECK CGM 7/03 DATE
QUANT. S.JO 5/02 CHECK CGM 7/03 BY

APPROVAL RECOMMENDED — DATE — PROJECT DESIGN ENGINEER
APPROVED FOR USE BY UDOT — DATE — PRECONSTRUCTION ENGINEER

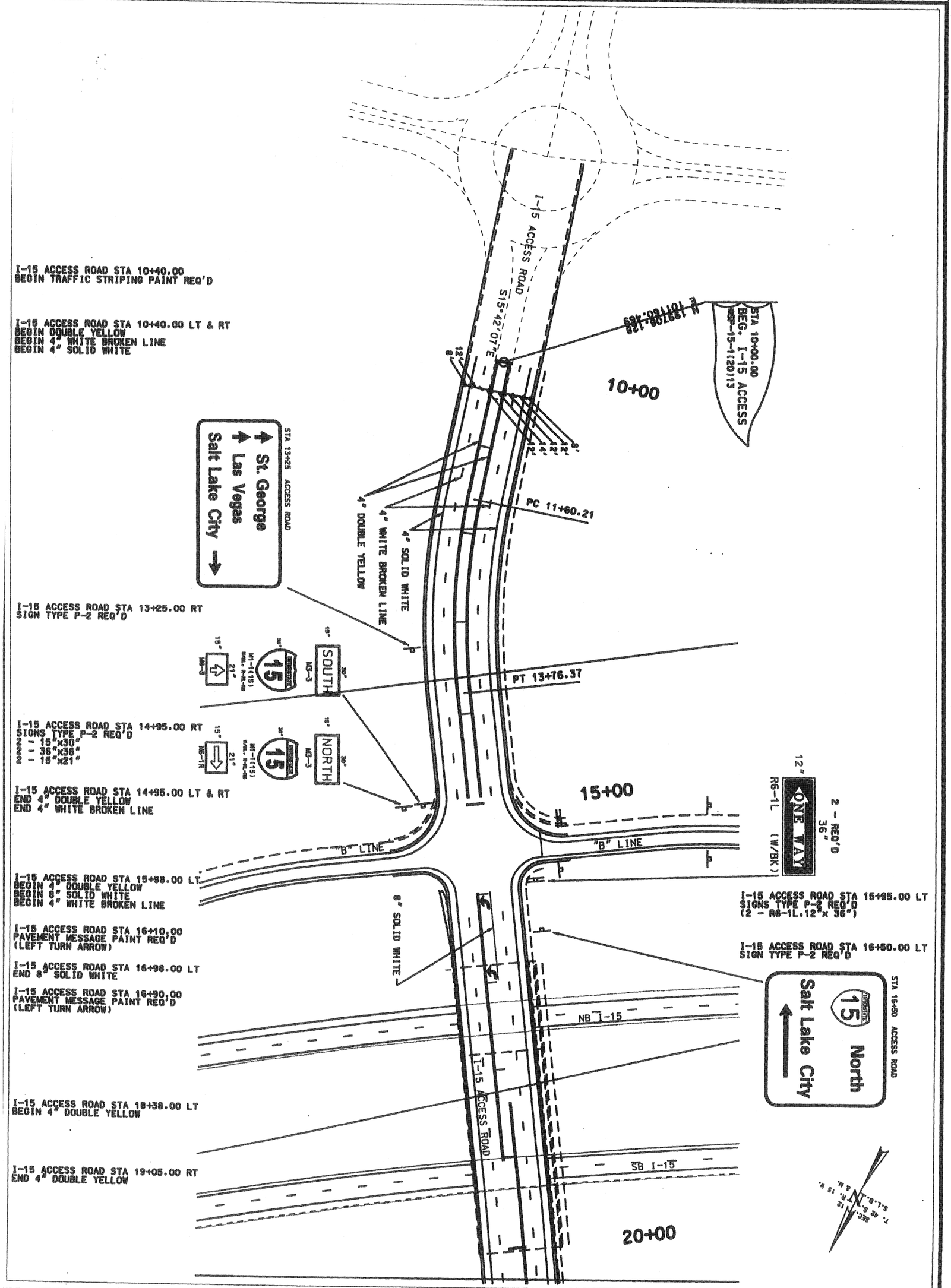

WASHINGTON COUNTY

WASHINGTON INTERCHANGE @ RP 13

SIGNING & STRIPING SHEET

PROJECT NUMBER *SP-15-1(20)13

SHEET NO. SS-8

UTAH DEPARTMENT OF TRANSPORTATION
REGION 4 — RICHFIELD, UTAH
ROADWAY DESIGN

APPROVAL RECOMM. DATE PROJECT DESIGN ENGINEER

APPROVED FOR USE BY UDOT DATE PRECONSTRUCTION ENGINEER

DESIGN	SJO	5/02	CHECK	CGW	7/03
DRAWN	SJO	5/02	CHECK	CGW	7/03
QUANT.	SJO	5/02	CHECK	CGW	7/03

REVIEW
DATE
BY

NO.	DATE	DESIGN REV. BY	MAPS CORR. BY	PARCELS AFFECTED	REQUEST BY	REMARKS
						ORIGINAL SUBMISSION FOR AUTHORIZATION
	DATE					REVISIONS

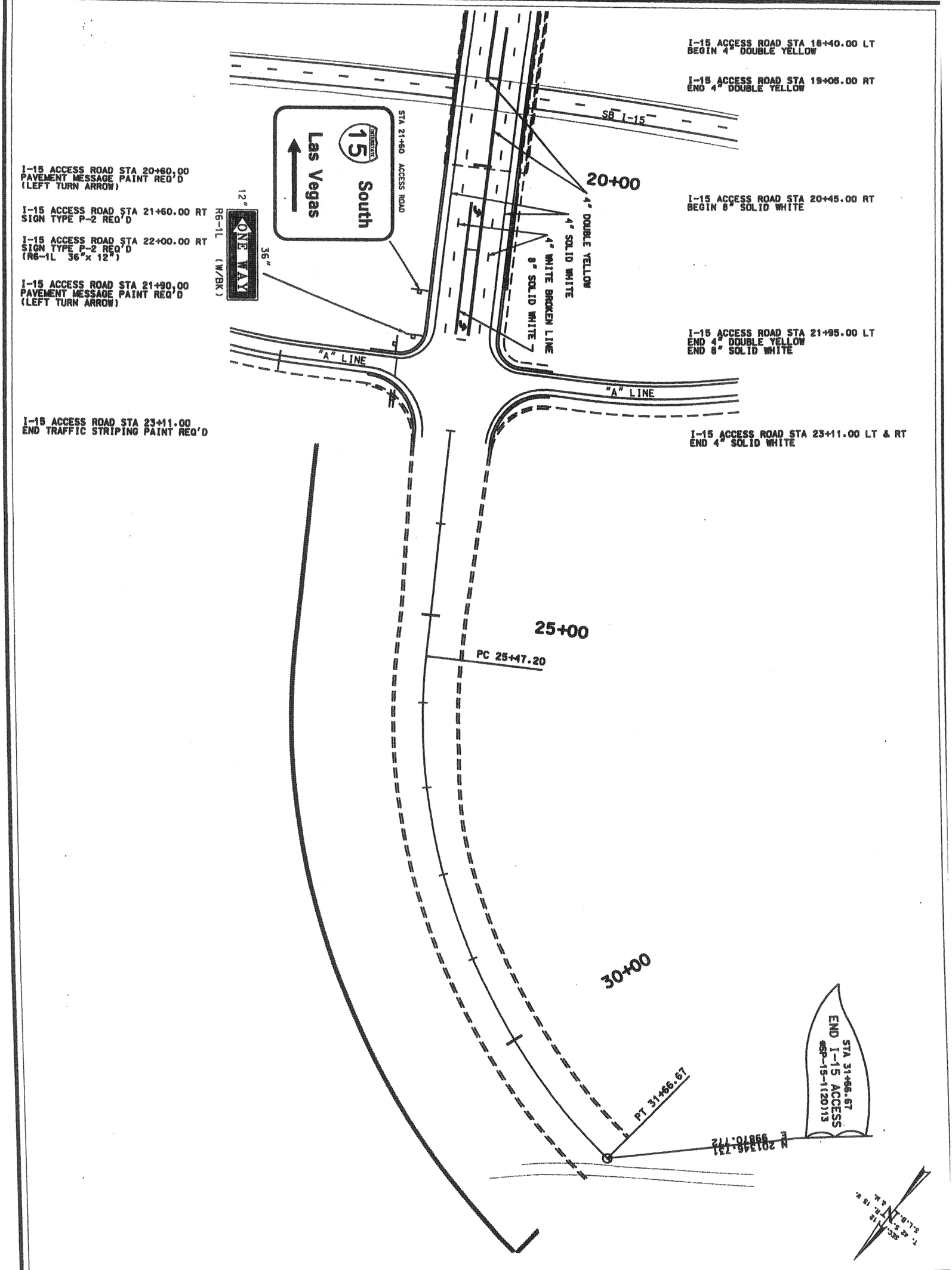

SHEET NO. SS-8	WASHINGTON COUNTY	WASHINGTON INTERCHANGE @ RP 13	UTAH DEPARTMENT OF TRANSPORTATION REGION 4 — RICHFIELD, UTAH ROADWAY DESIGN		
		SIGNING & STRIPING SHEET	APPROVAL RECOMM. DATE PROJECT DESIGN ENGINEER	DESIGN SJO 5/02 DRAWN SJO 5/02 QUANT. SJO 5/02	CHECK CGW 7/03 CHECK CGW 7/03 CHECK CGW 7/03
		PROJECT NUMBER #SP-15-1(20)13	APPROVED FOR USE BY UDOT DATE PRECONSTRUCTION ENGINEER	REVIEW DATE BY	NO. DATE DESIGN MAPS PARCEL & REV. BY CONST. BY AFFECTED REQUEST BY REMARKS ORIGINAL SUBMISSION FOR AUTHORIZATION DATE REVISIONS

SPREAD STOCKPILED TOPSOIL, SEED AND MULCH ALL DISTURBED AREAS IN NATURAL AREAS NOT RECEIVING DECORATIVE ROCK MULCH

SPREAD STOCKPILED TOPSOIL, SEED AND MULCH ALL DISTURBED AREAS

ALUMINUM EDGING BETWEEN DECORATIVE STONE AREAS

SPREAD STOCKPILED TOPSOIL, SEED AND MULCH ALL DISTURBED AREAS

ALUMINUM EDGING BETWEEN DECORATIVE STONE AREAS

CONCRETE EDGING ALONG NATURAL AREAS ONLY

SPREAD STOCKPILED TOPSOIL, SEED AND MULCH ALL DISTURBED AREAS

"A" LINE

"B" LINE

SB I-15

NB I-15

I-15 ACCESS ROAD

PC 305+49.53

PC 308+91.34

PT 21+10.18

PC 24+04.41

PT 23+47.32

PC 20+97.81

PT 23+32.22

PC 16+11.36

PT 17+40.16

RM 308+03.9

N44°54'25"E

N75°50'35"E

RIVER ROCK (RED)

RIVER ROCK (GRAY)

COBBLE (TAN)

NATURAL AREA

FILL

CUT

15+00

20+00

25+

310+00

315+00

317+00

UTAH DEPARTMENT OF TRANSPORTATION
REGION 4 — RICHFIELD, UTAH
ROADWAY DESIGN

WASHINGTON INTERCHANGE @ RP 13

LANDSCAPE SHEET

ROCK MULCH PLAN

PROJECT NUMBER *SP-15-1(20)13

WASHINGTON COUNTY

SHEET NO. LS-1

NO.	DATE	REMARKS
		ORIGINAL SUBMISSION FOR AUTHORIZATION

REVISIONS

DESIGN JRB 10/03 CHECK SJD 10/03 REVIEW

DRAWN JRB 10/03 CHECK SJD 10/03 DATE

QUANT. JRB 10/03 CHECK SJD 10/03 BY

FINAL APPROVED PROJECT DESIGN ENGINEER DATE

APPROVED FOR CONSTRUCTION BY UDOT PRECONSTRUCTION ENGINEER DATE

SPREAD STOCKPILED TOPSOIL, SEED AND MULCH ALL DISTURBED AREAS

SPREAD STOCKPILED TOPSOIL, SEED AND MULCH ALL DISTURBED AREAS IN NATURAL AREAS NOT RECEIVING DECORATIVE ROCK MULCH

ALUMINUM EDGING BETWEEN DECORATIVE STONE AREAS

CONCRETE EDGING ALONG NATURAL AREAS ONLY

"A" LINE

"B" LINE

SB I-15

NB I-15

I-15 ACCESS ROAD

PC 28+63.62

PT 29+98.74

PC 33+92.36

PT 34+15.04

PC 26+91.74

PT 29+53.34

PC 32+76.06

POE 39+55.86

RIVER ROCK (RED)

RIVER ROCK (GRAY)

COBBLE (TAN)

WILD FLOWER

NATURAL AREA

FILL

CUT

10+00

20+00

30+00

35+00

40+00

320+00

325+00

330+00

UTAH DEPARTMENT OF TRANSPORTATION
REGION 4 — RICHFIELD, UTAH
ROADWAY DESIGN

WASHINGTON INTERCHANGE @ RP 13
LANDSCAPE SHEET
ROCK MULCH PLAN

PROJECT NUMBER #SP-15-1(20)13

WASHINGTON COUNTY

REVIEW — CHECK SJO 10/03 — DATE — BY

NO. DATE REMARKS

REVISIONS

ORIGINAL SUBMISSION FOR AUTHORIZATION

DESIGN JRB 10/03 — DRAWN JRB 10/03 — QUANT. JRB 10/03 — CHECK SJO 10/03

REGIONAL ENGINEER — DATE — PROJECT DESIGN ENGINEER

APPROVED FOR USE BY UDOT — DATE — PRECONSTRUCTION ENGINEER

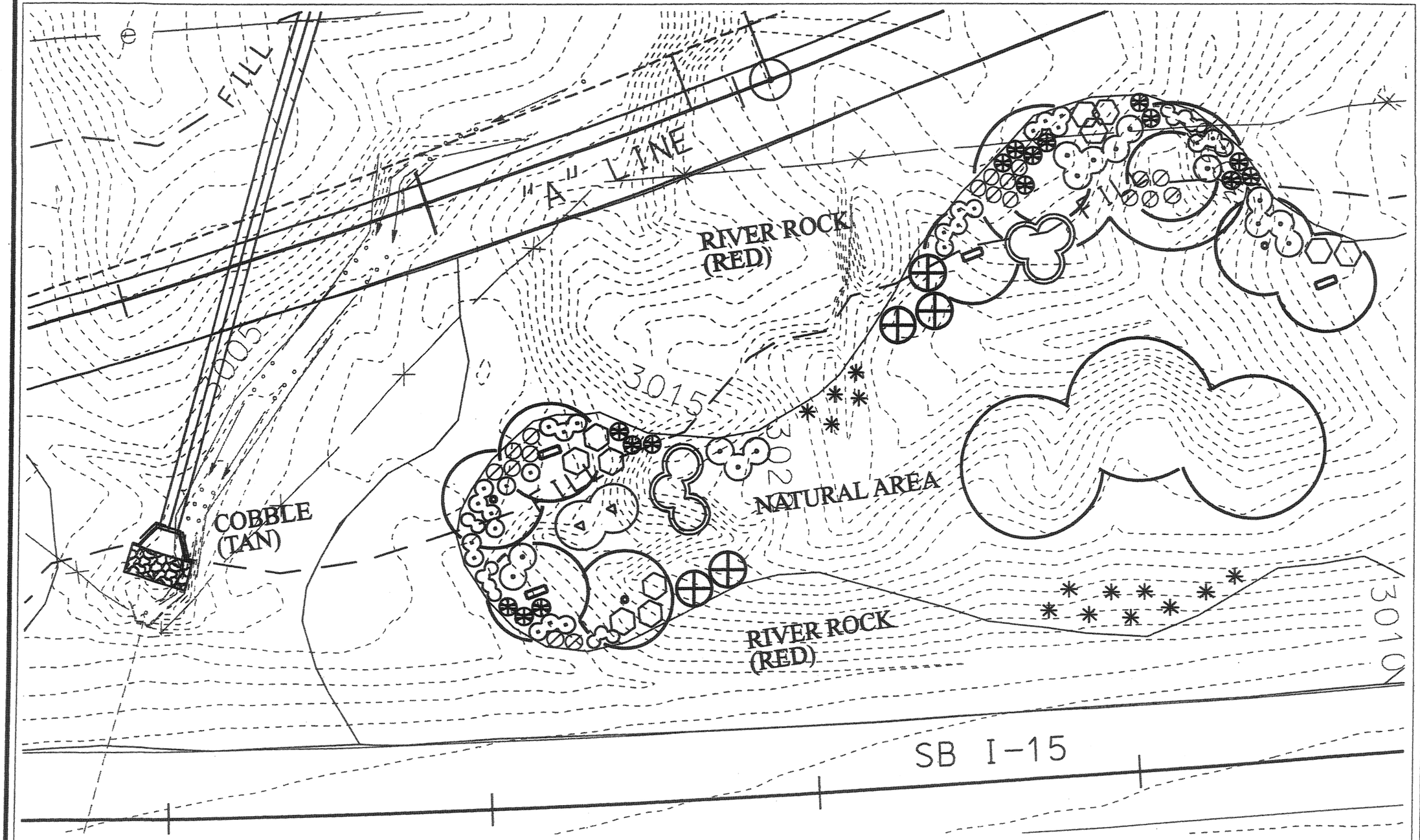

TREES

SYMBOL	COMMON NAME SCIENTIFIC NAME	QNTY	SIZE
	HONEY LOCUST Gleditsia triacanthos inermis 'Shademaster'	2	2"-CAL
	ARIZONA ASH Fraxinus velutina	3	2"-CAL

TREES

SYMBOL	COMMON NAME SCIENTIFIC NAME	QNTY	SIZE
	CHITALPA Chitalpa tashkentensis 'Pink dawn'	4	2"-CAL
	DESERT WILLOW Chilopsis linearis	3	2"-CAL

SHRUBS

SYMBOL	COMMON NAME SCIENTIFIC NAME	QUANTITY	SIZE
	MEXICAN REDBUD Cercis canadensis mexicana	2	5-GAL
	CREOSOTE Larrea tridentata	6	5-GAL
	SHRUB LIVE OAK Quercus turbinella	5	5-GAL
	FOUNDING SALTBUSH Atriplex canescens	15	5-GAL
	PURPLE SAGE Salvia leucophylla	11	5-GAL

SHRUBS

SYMBOL	COMMON NAME SCIENTIFIC NAME	QUANTITY	SIZE
	MORMON TEA Ephedra viridis	18	5-GAL
	APACHE PLUME Fallugia paradoxa	14	5-GAL
	VALENTINE PLANT Eremophila 'Valentine'	26	5-GAL
	CARPET ROSE Setenifia hana	16	5-GAL
	DESERT SPOON Dasylirion wheeleri	13	5-GAL

NO.	DATE	REMARKS
		ORIGINAL SUBMISSION FOR AUTHORIZATION

REVISIONS

DESIGN JRB 10/03 CHECK SJO 10/03 REVIEW

DRAWN JRB 10/03 CHECK SJO 10/03 DATE

QUANT. JRB 10/03 CHECK SJO 10/03 BY

UTAH DEPARTMENT OF TRANSPORTATION
REGION 4 — RICHFIELD, UTAH
ROADWAY DESIGN

REGIONAL ENGINEER — DATE
PROJECT DESIGN ENGINEER — DATE
APPROVED FOR USE BY DUDT — DATE
PRECONSTRUCTION ENGINEER — DATE

WASHINGTON INTERCHANGE @ RP 13

LANDSCAPE SHEET

PLANTING PLAN

PROJECT NUMBER *SP-15-1(20)13

WASHINGTON COUNTY

SHEET NO. LS-3

TREES

SYMBOL	COMMON NAME SCIENTIFIC NAME	QNTY	SIZE
	HONEY LOCUST Gleditsia triacanthos inermis 'Shademaster'	2	2"-CAL
	ARIZONA ASH Fraxinus velutina	3	2"-CAL

TREES

SYMBOL	COMMON NAME SCIENTIFIC NAME	QNTY	SIZE
	CHITALPA Chitalpa tashkentensis 'Pink dawn'	4	2"-CAL
	DESERT WILLOW Chilopsis linearis	3	2"-CAL

SHRUBS

SYMBOL	COMMON NAME SCIENTIFIC NAME	QUANTITY	SIZE
	MEXICAN REDBUD Cercis canadensis mexicana	2	5-GAL
	CREOSOTE Larrea tridentata	6	5-GAL
	SHRUB LIVE OAK Quercus turbinella	5	5-GAL
	FOURWING SALTBUSH Atriplex canescens	15	5-GAL
	PURPLE SAGE Salvia leucophylla	11	5-GAL

SHRUBS

SYMBOL	COMMON NAME SCIENTIFIC NAME	QUANTITY	SIZE
	MORMON TEA Ephedra viridis	18	5-GAL
	APACHE PLUME Fallugia paradoxa	14	5-GAL
	VALENTINE PLANT Eremophila 'Valentine'	26	5-GAL
	CARPET ROSE Scientific Name	16	5-GAL
	DESERT SPOON Dasylirion wheeleri	13	5-GAL

"A" LINE

COBBLE (TAN)

3025

3030

3035

3040

3045

3020

RCB

NATURAL AREA

COBBLE (TAN)

COBBLE (TAN)

CONCRETE SLOPE PROTECTION

RIVER ROCK (GRAY)

SB I-15

ACCESS ROAD

I-15

NO.	DATE	REMARKS
		ORIGINAL SUBMISSION FOR AUTHORIZATION

REVISIONS

UTAH DEPARTMENT OF TRANSPORTATION
REGION 4 — RICHFIELD, UTAH
ROADWAY DESIGN

DESIGN	JRB 10/03	CHECK	SJO 10/03
DRAWN	JRB 10/03	CHECK	SJO 10/03
QUANT.	JRB 10/03	CHECK	SJO 10/03

APPROVAL RECOMMENDED — DATE — PROJECT DESIGN ENGINEER

APPROVED FOR USE BY UDOT — DATE — PRECONSTRUCTION ENGINEER

REVIEW — BY — DATE

WASHINGTON INTERCHANGE @ RP 13

LANDSCAPE SHEET

PLANTING PLAN

PROJECT NUMBER #SP-15-1(20)13

WASHINGTON COUNTY

SHEET NO. LS-4

TREES

SYMBOL	COMMON NAME SCIENTIFIC NAME	QNTY	SIZE
	HONEY LOCUST Gleditsia triacanthos Inermis 'Shademaster'	2	2"-CAL
	ARIZONA ASH Fraxinus velutina	3	2"-CAL

TREES

SYMBOL	COMMON NAME SCIENTIFIC NAME	QNTY	SIZE
	CHITALPA Chitalpa tashkentensis 'Pink dawn'	4	2"-CAL
	DESERT WILLOW Chilopsis linearis	3	2"-CAL

SHRUBS

SYMBOL	COMMON NAME SCIENTIFIC NAME	QUANTITY	SIZE
	MEXICAN REDBUD Cercis canadensis mexicana	2	5-GAL
	CREOSOTE Larrea tridentata	6	5-GAL
	SHRUB LIVE OAK Quercus turbinella	5	5-GAL
	FOURWING SALTBUSH Atriplex canescens	15	5-GAL
	PURPLE SAGE Salvia leucophylla	11	5-GAL

SHRUBS

SYMBOL	COMMON NAME SCIENTIFIC NAME	QUANTITY	SIZE
	MORMON TEA Ephedra viridis	18	5-GAL
	APACHE PLUME Fallugia paradoxa	14	5-GAL
	VALENTINE PLANT Eremophila 'Valentine'	28	5-GAL
	CARPET ROSE Scientific Name	16	5-GAL
	DESERT SPOON Dasylirion wheeleri	13	5-GAL

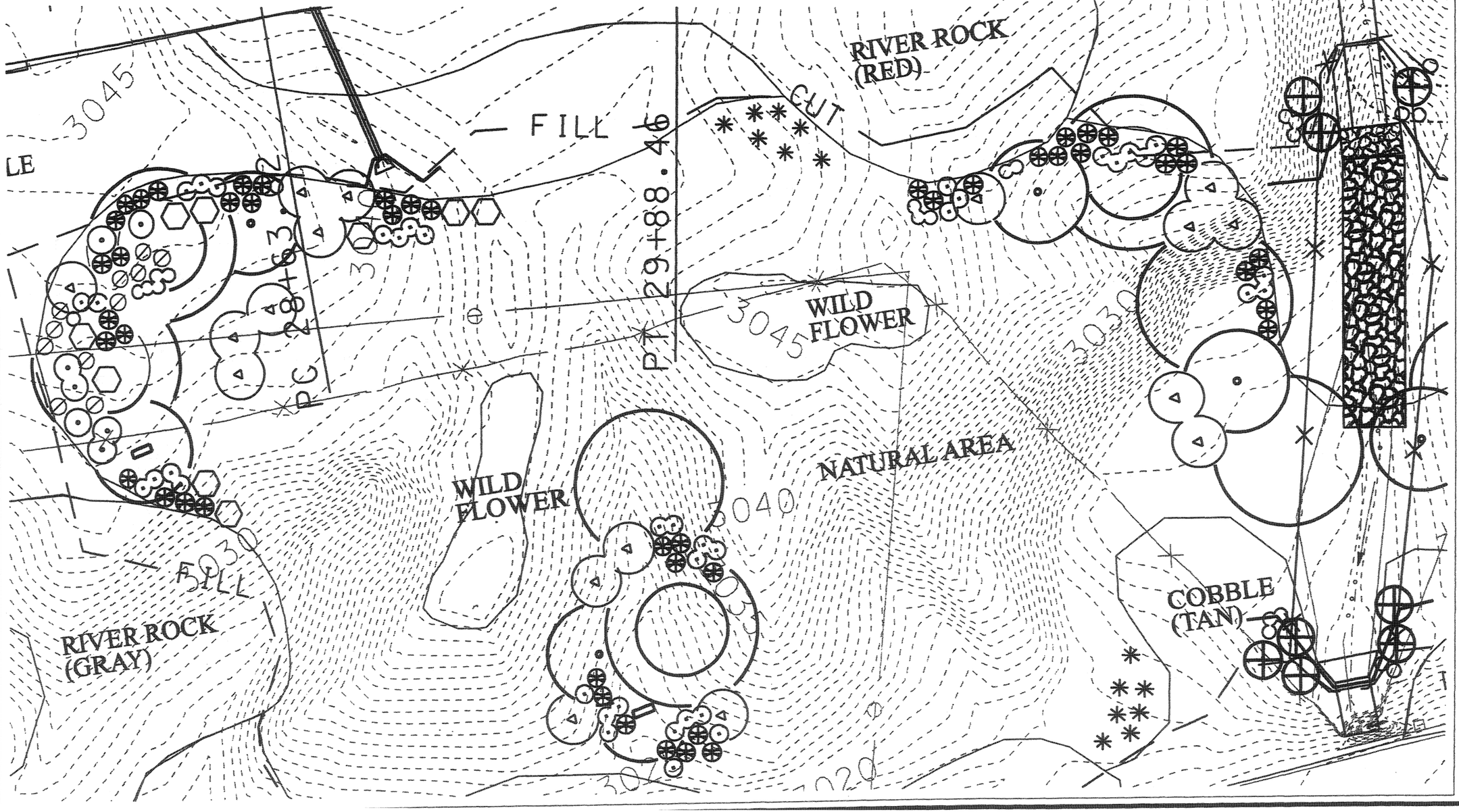

UTAH DEPARTMENT OF TRANSPORTATION
— RICHFIELD, UTAH
REGION 4
ROADWAY DESIGN

DESIGN	JRB	10/03	CHECK SJO 10/03 REVIEW
DRAWN	JRB	10/03	CHECK SJO 10/03 DATE
QUANT.	JRB	10/03	CHECK SJO 10/03 BY

AS-BUILT/RECORD: DATE — PROJECT DESIGN ENGINEER
APPROVED FOR USE: DATE — PRECONSTRUCTION ENGINEER

WASHINGTON INTERCHANGE @ RP 13
LANDSCAPE SHEET
PLANTING PLAN
PROJECT NUMBER #SP-15-1(120)13
WASHINGTON COUNTY
SHEET NO. LS-5

NO.	DATE	REMARKS
		ORIGINAL SUBMISSION FOR AUTHORIZATION
	DATE	REVISIONS

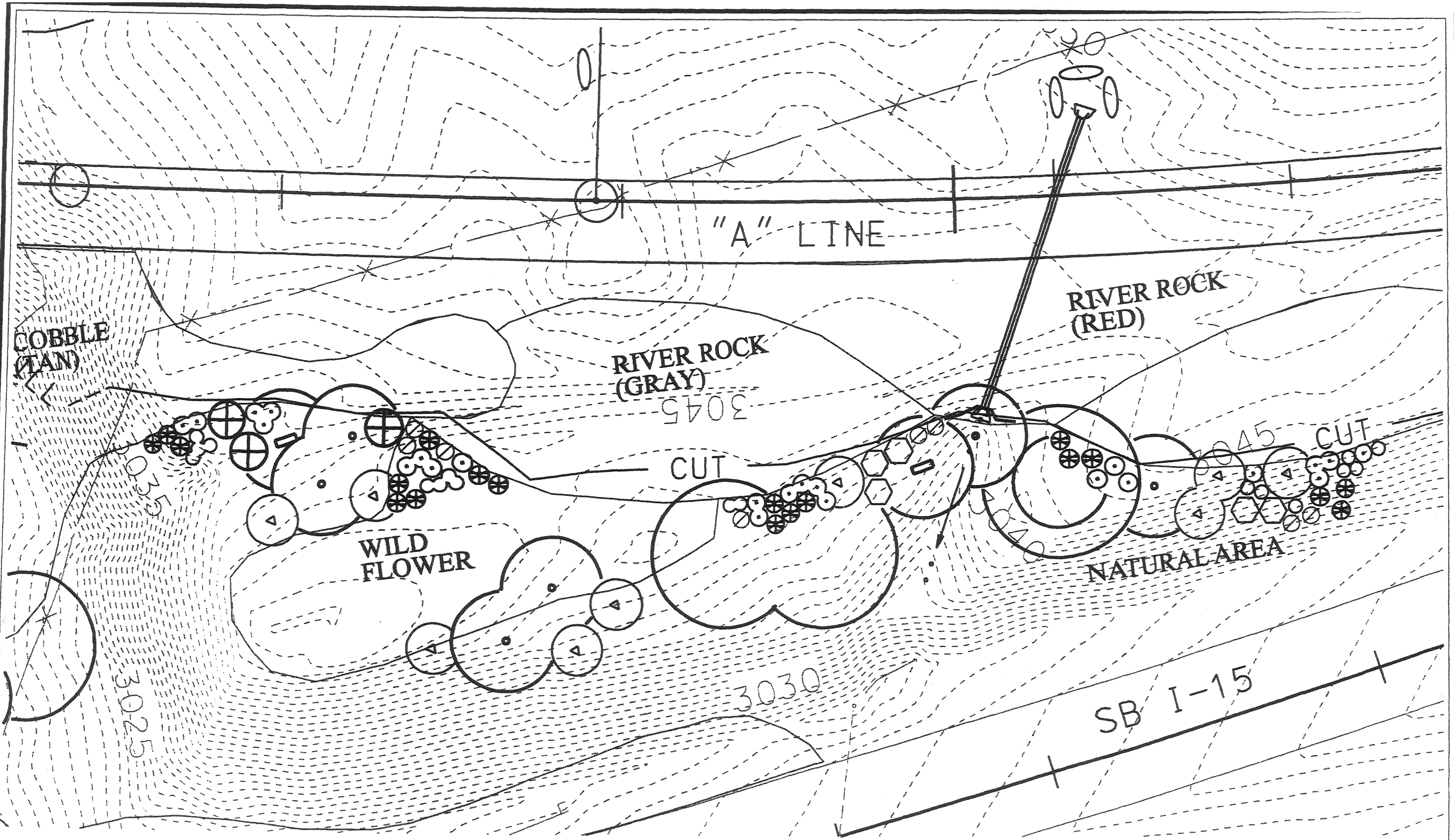

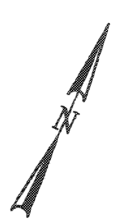

TREES

SYMBOL	COMMON NAME / SCIENTIFIC NAME	QNTY	SIZE
◎	HONEY LOCUST Gleditsia triacanthos inermis 'Shademaster'	2	2"-CAL
○	ARIZONA ASH Fraxinus velutina	3	2"-CAL

TREES

SYMBOL	COMMON NAME / SCIENTIFIC NAME	QNTY	SIZE
⊘	CHITALPA Chitalpa tashkentensis 'Pink dawn'	4	2"-CAL
⊙	DESERT WILLOW Chilopsis linearis	3	2"-CAL

SHRUBS

SYMBOL	COMMON NAME / SCIENTIFIC NAME	QUANTITY	SIZE
◁ in circle	MEXICAN REDBUD Cercis canadensis mexicana	2	5-GAL
◎	CREOSOTE Larrea tridentata	6	5-GAL
⊕	SHRUB LIVE OAK Quercus turbinella	5	5-GAL
⊙	FOURWING SALTBUSH Atriplex canescens	15	5-GAL
⬡	PURPLE SAGE Salvia leucophylla	11	5-GAL

SHRUBS

SYMBOL	COMMON NAME / SCIENTIFIC NAME	QUANTITY	SIZE
⊘	MORMON TEA Ephedra viridis	18	5-GAL
○	APACHE PLUME Fallugia paradoxa	14	5-GAL
⊙	VALENTINE PLANT Eremophila 'Valentine'	26	5-GAL
⊛	CARPET ROSE Scientific Name	16	5-GAL
✳	DESERT SPOON Dasylirion wheeleri	13	5-GAL

UTAH DEPARTMENT OF TRANSPORTATION
REGION 4 — RICHFIELD, UTAH
ROADWAY DESIGN

REVIEW
DESIGN JRB 10/03 CHECK SJO 10/03
DRAWN JRB 10/03 CHECK SJO 10/03
QUANT. JRB 10/03 CHECK SJO 10/03

ORIGINAL SUBMISSION FOR AUTHORIZATION
REVISIONS

WASHINGTON INTERCHANGE @ RP 13
LANDSCAPE SHEET
PLANTING PLAN
PROJECT NUMBER #SP-15-1(20)13

WASHINGTON COUNTY
SHEET NO. LS-6

TREES

SYMBOL	COMMON NAME SCIENTIFIC NAME	QNTY	SIZE
	HONEY LOCUST Gleditsia triacanthos Inermis 'Shademaster'	2	2"-CAL
	ARIZONA ASH Fraxinus velutina	3	2"-CAL

TREES

SYMBOL	COMMON NAME SCIENTIFIC NAME	QNTY	SIZE
	CHITALPA Chitalpa tashkentensis 'Pink dawn'	4	2"-CAL
	DESERT WILLOW Chilopsis linearis	3	2"-CAL

SHRUBS

SYMBOL	COMMON NAME SCIENTIFIC NAME	QUANTITY	SIZE
	MEXICAN HEDGE Carnia ornamenta mexicana	2	5-GAL
	CREOSOTE Larrea tridentata	6	5-GAL
	SHRUB LIVE OAK Quercus turbinella	5	5-GAL
	FOURWING SALTBUSH Atriplex canescens	15	5-GAL
	PURPLE SAGE Salvia leucophylla	11	5-GAL

SHRUBS

SYMBOL	COMMON NAME SCIENTIFIC NAME	QUANTITY	SIZE
	MORMON TEA Ephedra viridis	18	5-GAL
	APACHE PLUME Fallugia paradoxa	14	5-GAL
	VALENTINE PLANT Eremophila 'Valentine'	25	5-GAL
	CARPET ROSE Scientific Name	16	5-GAL
	DESERT SPOON. Dasylirion wheeleri	13	5-GAL

NB I-15

FILL

RIVER ROCK (RED)

FILL

3010

NATURAI AREA

WILD FLOWER

COBBLE (TAN)

3005

FILL

RIVER (GRA

"B" LINE

3000

L

T V L.

30

30

NO.	DATE	REMARKS
		ORIGINAL SUBMISSION FOR AUTHORIZATION
	DATE	REVISIONS

UTAH DEPARTMENT OF TRANSPORTATION
REGION 4 — RICHFIELD, UTAH
ROADWAY DESIGN

DESIGN JRB 10/03 CHECK SJO 10/03 REVIEW
DRAWN JRB 10/03 CHECK SJO 10/03 DATE
QUANT. JRB 10/03 CHECK SJO 10/03 BY

AERONAUTICAL RECOMM. DATE — PROJECT DESIGN ENGINEER
APPROVED FOR USE BY DOT DATE — PRECONSTRUCTION ENGINEER

WASHINGTON INTERCHANGE @ RP 13

LANDSCAPE SHEET
PLANTING PLAN

PROJECT NUMBER #SP-15-1(120)13

WASHINGTON COUNTY

SHEET NO. LS-7

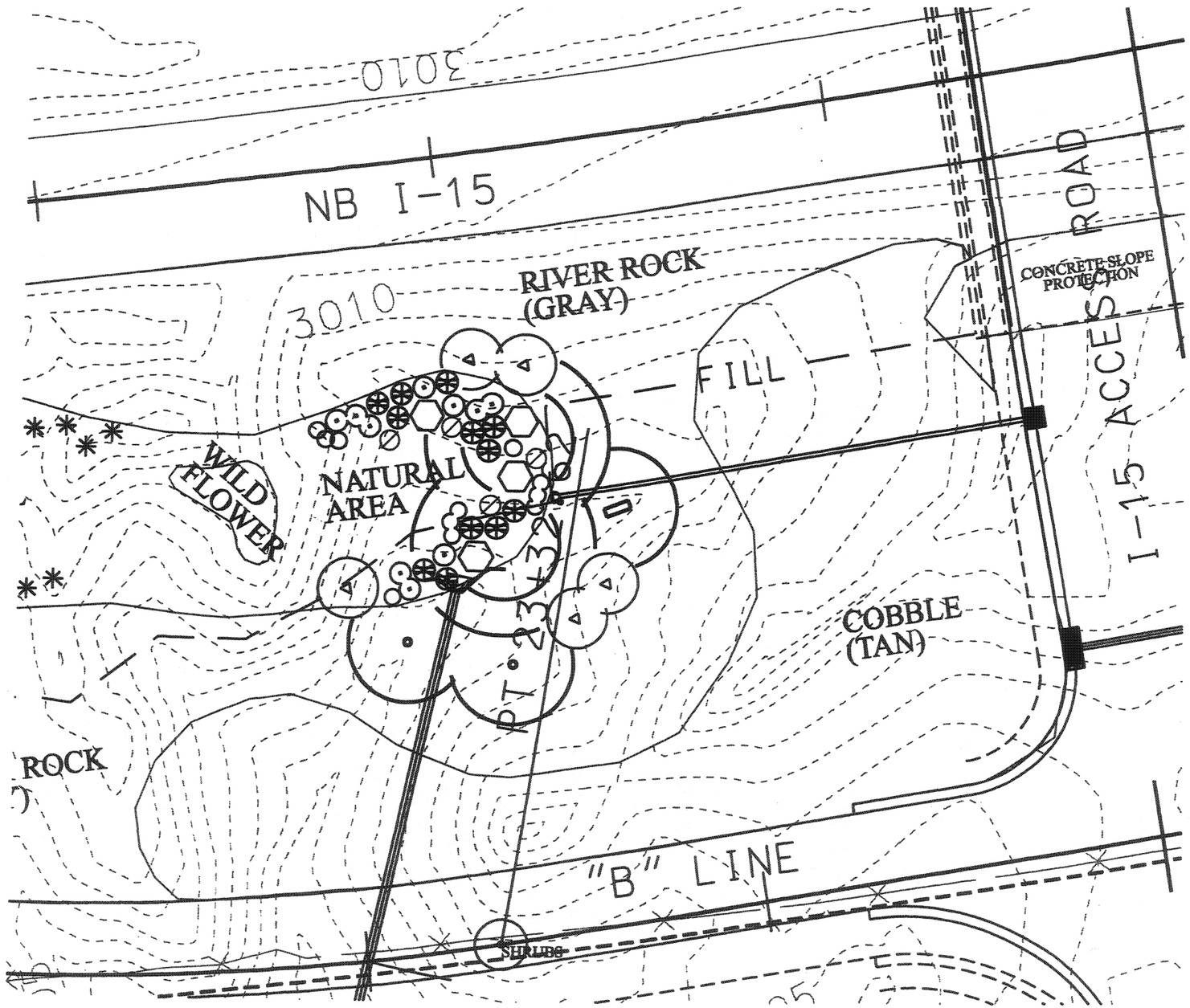

TREES

SYMBOL	COMMON NAME SCIENTIFIC NAME	QNTY	SIZE
	HONEY LOCUST Gleditsia triacanthos Inermis 'Shademaster'	2	2"-CAL
	ARIZONA ASH Fraxinus velutina	3	2"-CAL

TREES

SYMBOL	COMMON NAME SCIENTIFIC NAME	QNTY	SIZE
	CHITALPA Chitalpa tashkentensis 'Pink dawn'	4	2"-CAL
	DESERT WILLOW Chilopsis linearis	3	2"-CAL

SHRUBS

SYMBOL	COMMON NAME SCIENTIFIC NAME	QUANTITY	SIZE
	MEXICAN REDBUD Cercis canadensis mexicana	2	5-GAL
	CREOSOTE Larrea tridentata	6	5-GAL
	SHRUB LIVE OAK Quercus turbinella	5	5-GAL
	FOURWING SALTBUSH Atriplex canescens	15	5-GAL
	PURPLE SAGE Salvia leucophylla	11	5-GAL

SHRUBS

SYMBOL	COMMON NAME SCIENTIFIC NAME	QUANTITY	SIZE
	MORMON TEA Ephedra viridis	18	5-GAL
	APACHE PLUME Fallugia paradoxa	14	5-GAL
	VALENTINE PLANT Eremophila 'Valentine'	26	5-GAL
	CARPET ROSE Solentifia Nana	16	5-GAL
	DESERT SPOON Dasylirion wheeleri	13	5-GAL

UTAH DEPARTMENT OF TRANSPORTATION
REGION 4 — RICHFIELD, UTAH
ROADWAY DESIGN

DESIGN JRB 10/03	CHECK SJO 10/03	REVIEW	
DRAWN JRB 10/03	CHECK SJO 10/03	DATE	
QUANT. JRB 10/03	CHECK SJO 10/03	BY	

NO.	DATE	BY	REMARKS
			ORIGINAL SUBMISSION FOR AUTHORIZATION

REVISIONS

APPROVED FOR REGION 4	DATE	PROJECT DESIGN ENGINEER	
APPROVED BY UDOT	DATE	PRECONSTRUCTION ENGINEER	

ORIGINAL RECORD

WASHINGTON INTERCHANGE @ RP 13

LANDSCAPE SHEET

PLANTING PLAN

PROJECT NUMBER #SP-15-1(20)113

WASHINGTON COUNTY

SHEET NO. LS-8

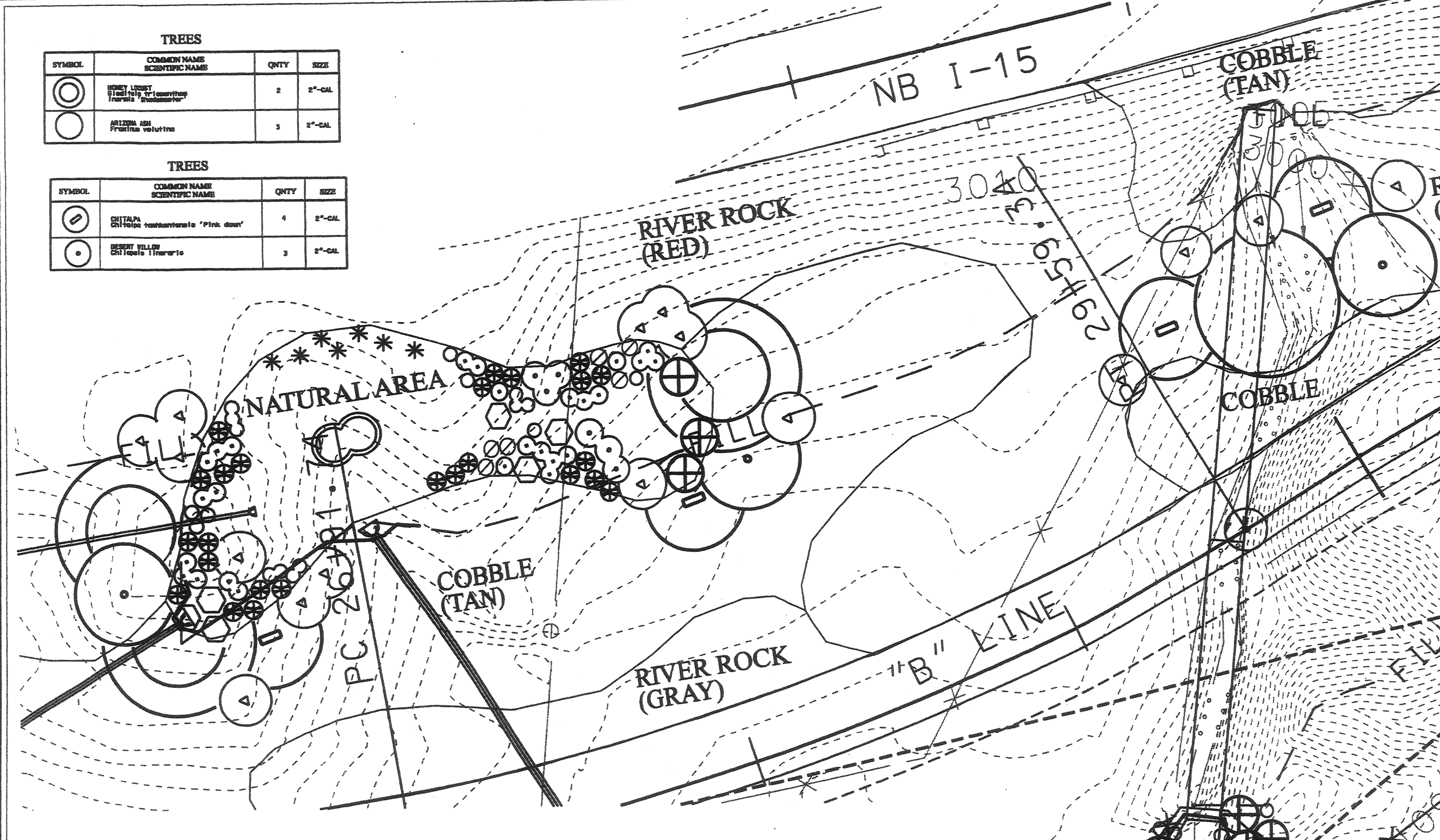

TREES

SYMBOL	COMMON NAME SCIENTIFIC NAME	QNTY	SIZE
(double circle)	HONEY LOCUST Gleditsia triacanthos inermis 'Shademaster'	2	2"-CAL
(circle)	ARIZONA ASH Fraxinus velutina	3	2"-CAL

TREES

SYMBOL	COMMON NAME SCIENTIFIC NAME	QNTY	SIZE
(circle with bar)	CHITALPA Chitalpa tashkentensis 'Pink dawn'	4	2"-CAL
(circle with dot)	DESERT WILLOW Chilopsis linearis	3	2"-CAL

SHRUBS

SYMBOL	COMMON NAME SCIENTIFIC NAME	QUANTITY	SIZE
(circle with triangle)	MEXICAN REDBUD Cercis canadensis mexicana	2	5-GAL
(heavy circle)	CREOSOTE Larrea tridentata	6	5-GAL
(circle with cross)	SHRUB LIVE OAK Quercus turbinella	5	5-GAL
(circle with dot)	FOURWING SALTBUSH Atriplex canescens	15	5-GAL
(hexagon)	PURPLE SAGE Salvia leucophylla	11	5-GAL

SHRUBS

SYMBOL	COMMON NAME SCIENTIFIC NAME	QUANTITY	SIZE
(circle with slash)	MORMON TEA Ephedra viridis	18	5-GAL
(circle)	APACHE PLUME Fallugia paradoxa	14	5-GAL
(double circle with dot)	VALENTINE PLANT Eremophila 'Valentine'	26	5-GAL
(spoked circle)	CARPET ROSE Scientific Name	16	5-GAL
(asterisk)	DESERT SPOON Dasylirion wheeleri	13	5-GAL

UTAH DEPARTMENT OF TRANSPORTATION
REGION 4 — RICHFIELD, UTAH
ROADWAY DESIGN

DESIGN JRB 10/03	CHECK SJO 10/03	REVIEW	
DRAWN JRB 10/03	CHECK SJO 10/03	DATE	
QUANT. JRB 10/03	CHECK SJO 10/03	BY	

ORIGINAL SUBMISSION FOR AUTHORIZATION
REVISIONS

WASHINGTON INTERCHANGE @ RP 13
LANDSCAPE SHEET
PLANTING PLAN
PROJECT NUMBER #SP-15-1(20)13

WASHINGTON COUNTY
SHEET NO. LS-9

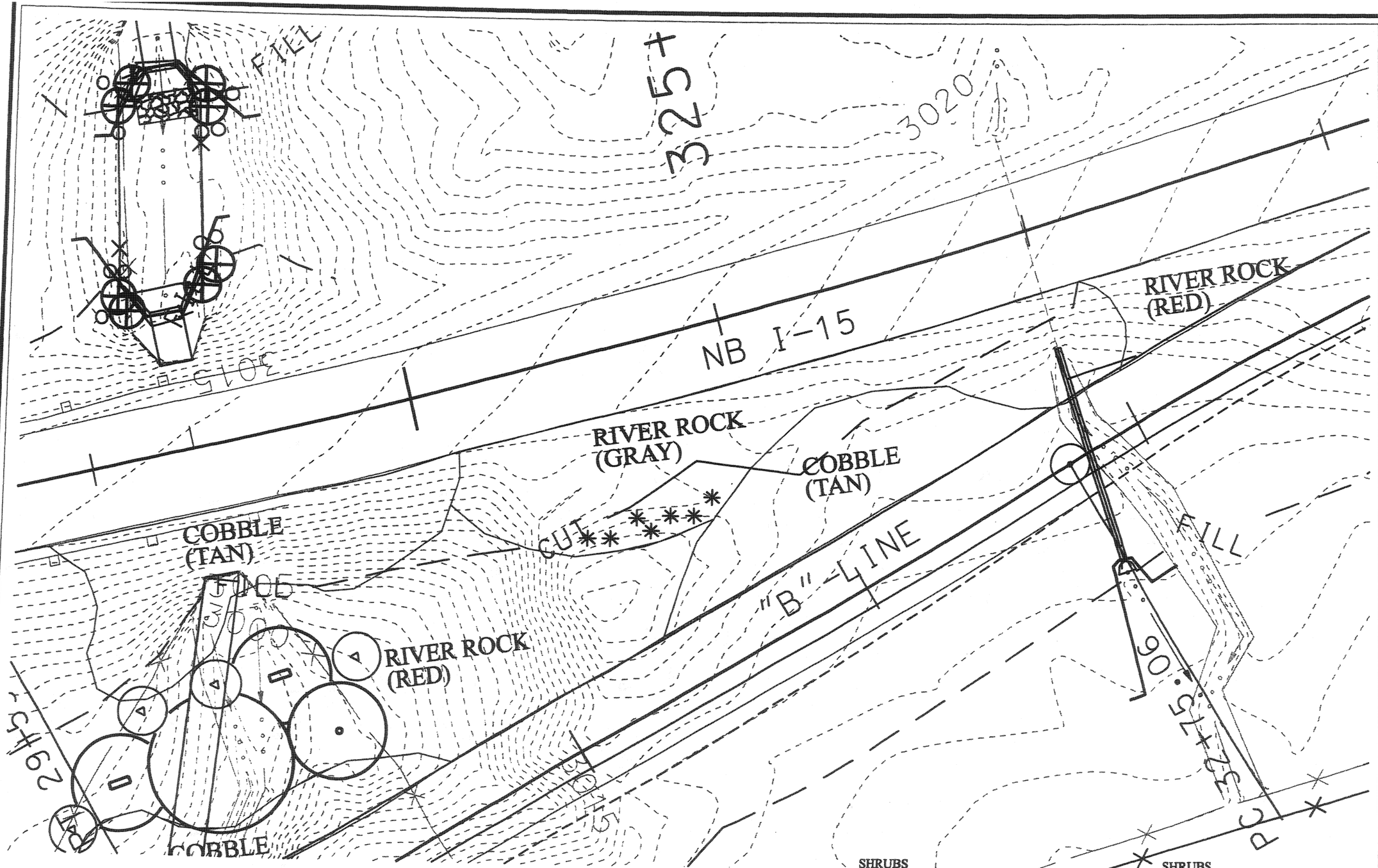

TREES

SYMBOL	COMMON NAME SCIENTIFIC NAME	QNTY	SIZE
	HONEY LOCUST Gleditsia triacanthos inermis 'Shademaster'	2	2"-CAL
	ARIZONA ASH Fraxinus velutina	3	2"-CAL

TREES

SYMBOL	COMMON NAME SCIENTIFIC NAME	QNTY	SIZE
	CHITALPA Chitalpa tashkentensis 'Pink dawn'	4	2"-CAL
	DESERT WILLOW Chilopsis linearis	3	2"-CAL

SHRUBS

SYMBOL	COMMON NAME SCIENTIFIC NAME	QUANTITY	SIZE
	MEXICAN REDBUD Cercis canadensis mexicana	2	5-GAL
	CREOSOTE Larrea tridentata	6	5-GAL
	SHRUB LIVE OAK Quercus turbinella	5	5-GAL
	FOURWING SALTBUSH Atriplex canescens	15	5-GAL
	PURPLE SAGE Salvia leucophylla	11	5-GAL

SHRUBS

SYMBOL	COMMON NAME SCIENTIFIC NAME	QUANTITY	SIZE
	MORMON TEA Ephedra viridis	18	5-GAL
	APACHE PLUME Fallugia paradoxa	14	5-GAL
	VALENTINE PLANT Eremophila 'Valentine'	26	5-GAL
	CARPET ROSE Scientific Name	16	5-GAL
	DESERT SPOON Dasylirion wheeleri	13	5-GAL

NO.	DATE	REVISION MADE / APPROVED BY	REMARKS
		ORIGINAL SUBMISSION FOR AUTHORIZATION	

REVISIONS

UTAH DEPARTMENT OF TRANSPORTATION
REGION 4 — RICHFIELD, UTAH
ROADWAY DESIGN

DESIGN JRB 10/03 CHECK SJO 10/03 REVIEW
DRAWN JRB 10/03 CHECK SJO 10/03 DATE
QUANT. JRB 10/03 CHECK SJO 10/03 BY

ARCHIVAL RECORDS — DATE
APPROVED FOR USE BY UDOT — DATE
PROJECT DESIGN ENGINEER
PRECONSTRUCTION ENGINEER

WASHINGTON INTERCHANGE @ RP 13

LANDSCAPE SHEET

PLANTING PLAN

PROJECT NUMBER #SP-15-1(20)13

WASHINGTON COUNTY

SHEET NO. LS-10

LANDSCAPE DETAIL SHEET

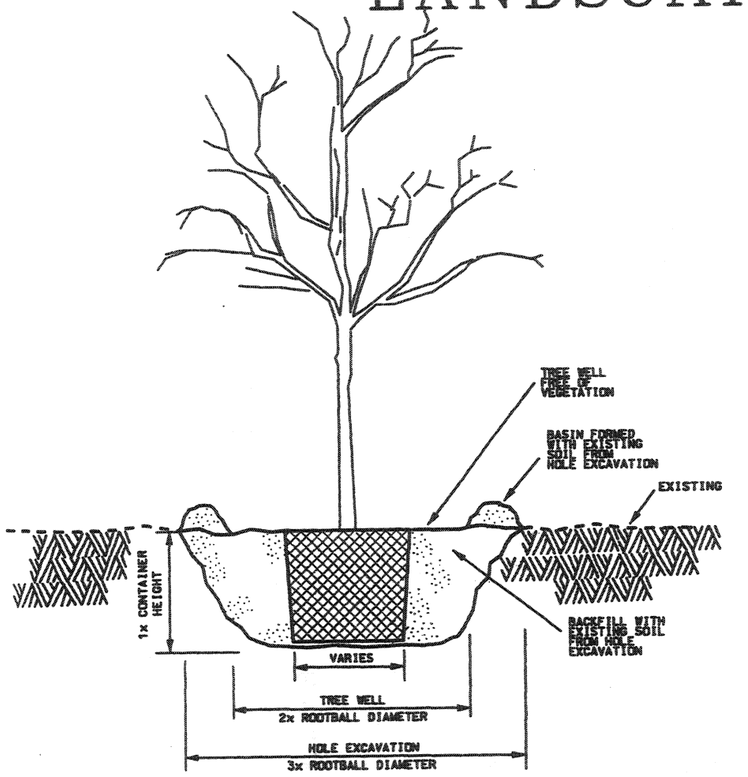

A 2-INCH CALIPER TREE PLANTING (CONTAINER)

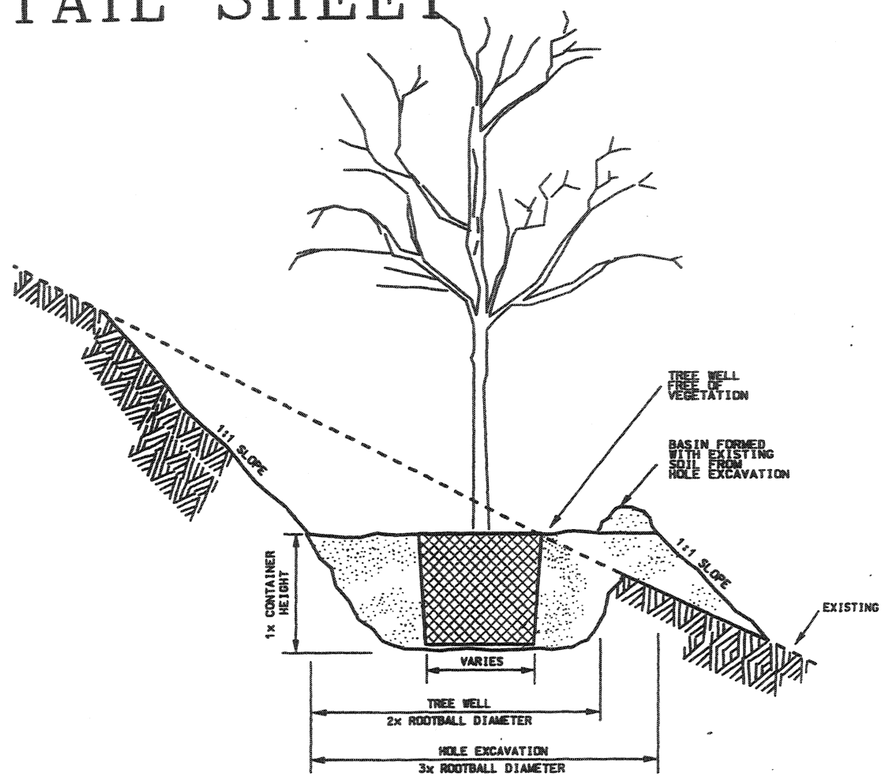

B 2-INCH CALIPER TREE PLANTING ON SLOPE (CONTAINER)

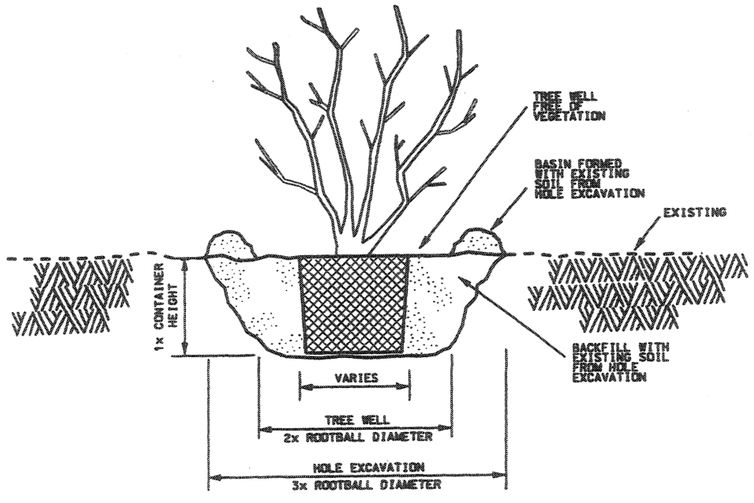

C 5-GALLON SHRUB PLANTING (CONTAINER)

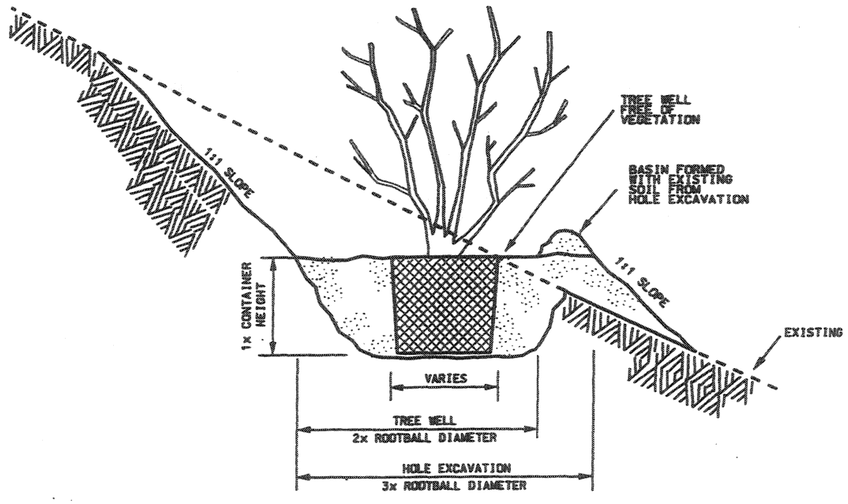

D 5-GALLON SHRUB PLANTING ON SLOPE (CONTAINER)

NO.	DATE	REVISIONS	BY	REMARKS
		ORIGINAL SUBMISSION FOR AUTHORIZATION		

UTAH DEPARTMENT OF TRANSPORTATION
REGION 4 — RICHFIELD, UTAH
ROADWAY DESIGN

DESIGN JRB 09/03 CHECK SJO 09/03 REVIEW
DRAWN JRB 09/03 CHECK SJO 09/03 DATE
QUANT. JRB 09/03 CHECK SJO 09/03 BY

RECOMMENDED: PROJECT DESIGN ENGINEER — DATE
APPROVAL RECOMMENDED: PRECONSTRUCTION ENGINEER — DATE
APPROVED FOR USE BY UDOT — DATE

WASHINGTON INTERCHANGE @ RP 13
LANDSCAPE SHEET
LANDSCAPE DETAIL SHEET
PROJECT NUMBER #SP-15-1(20)13
WASHINGTON COUNTY
SHEET NO. LS-11

LANDSCAPE DETAIL SHEET

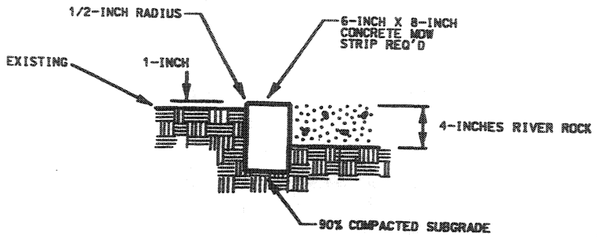

CONCRETE EDGING W/ RIVER ROCK

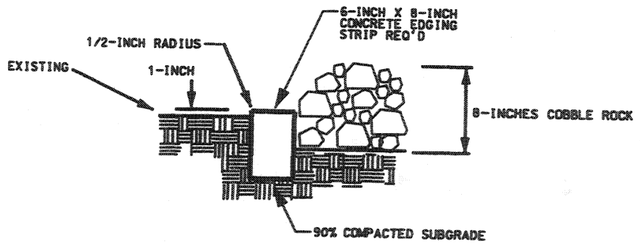

CONCRETE EDGING W/ COBBLE ROCK

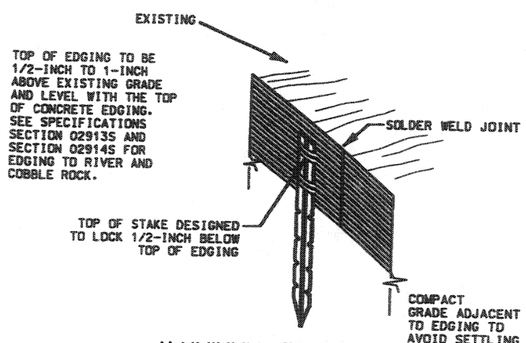

ALUMINUM EDGING

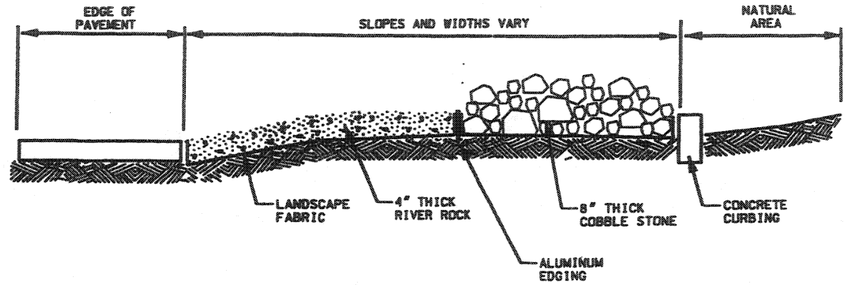

Ⓒ DECORATIVE STONE WITH EDGING DETAIL

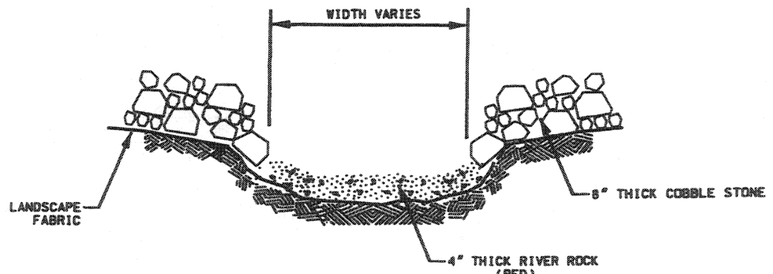

NOTES:

1. THE "DITCH DETAIL FOR GORE AREAS" APPLIES TO MAIN DRAINAGES THAT CARRY RUNOFF TO AND FROM CULVERTS WITHIN THE GORE AREA.
2. NO DECORATIVE ROCK TREATMENTS IN DRAINAGES PASSING THROUGH NATURAL AREAS.
3. NO DECORATIVE ROCK TREATMENTS IN THE BOTTOM OF DRAINAGES USED FOR PEDESTRIAN PATHS.
4. NO DECORATIVE ROCK TO BE USED IN DRAINAGES OUTSIDE OF THE GORE AREAS.

Ⓓ DITCH DETAIL THROUGH COBBLE ROCK AREAS

NO. | DATE | REVISION MADE BY | MARK APPROVED BY | REMARKS

ORIGINAL SUBMISSION FOR AUTHORIZATION

DATE | BY

UTAH DEPARTMENT OF TRANSPORTATION
REGION 4 — RICHFIELD, UTAH
ROADWAY DESIGN

DESIGN JRB 09/03 | CHECK SJO 09/03 | REVIEW
DRAWN JRB 09/03 | CHECK SJO 09/03 | DATE
QUANT. JRB 09/03 | CHECK SJO 09/03 | BY

APPROVAL RECOMMENDED — PROJECT DESIGN ENGINEER — DATE
APPROVED FOR USE BY UDOT — PRECONSTRUCTION ENGINEER — DATE

WASHINGTON INTERCHANGE @ RP 13

LANDSCAPE SHEET

LANDSCAPE DETAIL SHEET

PROJECT NUMBER *SP-15-1(20)13

WASHINGTON COUNTY

SHEET NO. LS-12

LEGEND

Symbol	Description
M	1-1/2" WATER METER
	1-1/2" REDUCED PRESSURE BACKFLOW PREVENTER BY WILKINS OR EQUAL
	1-1/2" PRESSURE REDUCER BY WILKINS OR EQUAL
	2" PVC SCH. 40 LOOPED IRRIGATION MAIN LINE
	1" PVC SCHEDULE 40 DRIP SUPPLY LINE
	3/4" DRIP IRRIGATION TUBING (NOT SHOWN)
	RAIN BIRD PESB SERIES ELECTRIC CONTROL VALVE WITH RAIN BIRD UNIK DC SOLENOID WITH RB ADAPTER AND UNIK 4 STATION MODULE
EV	EXTRA RAIN BIRD PESB SERIES ELECTRIC CONTROL VALVE WITH RAIN BIRD UNIK DC SOLENOID WITH RB ADAPTER AND UNIK 4 STATION MODULE
	1-1/2" QUICK COUPLING VALVE BY NELSON OR EQUAL
	2" MAINLINE GATE VALVE WITH 2" OPERATIONAL NUT BY WILKINS OR EQUAL
	2" MAINLINE MANUAL DRAIN VALVE BY TORO OR EQUAL INSTALLED AT THE LOW POINTS OF AREA 1 AND AREA 4 FOR DRAINING & WINTERIZING SYSTEM.
SLEEVE	4" PVC SCH. 40 SLEEVE UNDERNEATH PAVEMENT AS INDICATED

*PLACE AUTO DRAINS WITH CHECK VALVES AT ALL LOW POINTS. REFER TO DETAILS, NOTES, AND IRRIGATION MATERIALS LIST FOR ADDITIONAL INFORMATION, AND MATERIALS REQUIRED.

IRRIGATION MATERIALS:

Valves: Rain Bird PESB 1-1/2" remote control valve w/DC solenoid.

Valve Box: "Jumbo" size. Each valve box shall contain only one valve, filter, pressure reducer, and PVC Sch. 80 ball valve for each drip zone.

Pressure Reducer: Line size by Senniger or equal.

Filter: Line Size by Amiad or equal, 120 mesh, 30 micron filter.

Drip Tubing: 3/4" Disco drip irrigation line or equal.

Distribution Tubing: 1/4" "spaghetti tube"

Drip Emitter: Netafim 2 GPM pressure compensating emitters Model PC20 or equal with bug cap. Four (4) emitters are required for each tree, and two (2) emitters are required for each shrub (see planting plan and details). All emitters are to be staked!

Line Stakes: Netafim 6" soil staple.

Controller: Rain Bird UNIK field programmable transmitter with UNIK 4 station module and UNIK DC solenoid w/RB adapter. Provide to the Owner one (1) controller for every four (4) valves.

Backflow Preventer: 1-1/2" reduced pressure backflow preventer by Wilkins or Equal.

Hot Rock: Enclosure for Backflow preventer by "Hot Rock" of adequate size.

Mainline Gate Valve: 2" cast iron gate valve with a 2" operational nut by Wilkins or Equal.

Manual Drain Valve: 2" Manual Drain Valve (2 ea.) by Toro or Equal placed at low points of Area 1 and Area 4.

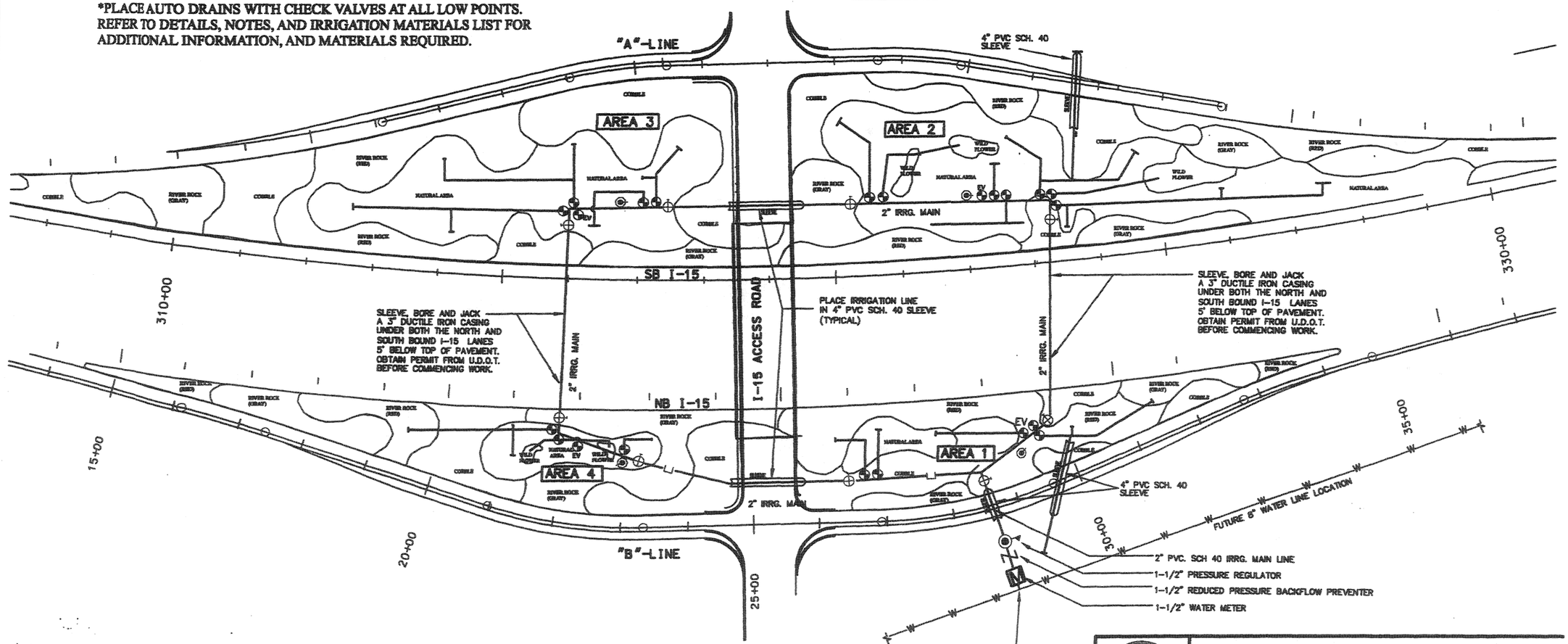

CALL BEFORE YOU DIG: 1-800-662-4111
BLUE STAKES UTILITIES PROTECTION CENTER
UNDERGROUND UTILITY SERVICE (USA)

NORTH

Point of Connection and Irrigation Main Line Plan

STATE OF UTAH — EDWARD J. FRENCH 332751 — LICENSED LANDSCAPE ARCHITECT

FRENCH & ASSOCIATES
LANDSCAPE ARCHITECTURE
SPORTS FACILITY DESIGN
LAND SURVEYING
URBAN DESIGN
1425 THIRD AVENUE
COLUMBUS, GEORGIA 31901
PHONE: (706) 324-6457

UTAH DEPARTMENT OF TRANSPORTATION
REGION 4 — RICHFIELD, UTAH
ROADWAY DESIGN

NO.	DATE	REMARKS
		ORIGINAL SUBMISSION FOR AUTHORIZATION
	DATE	REVISIONS

DESIGN MSJ 7/03 CHECK ELF 8/03 REVIEW
DRAWN MSJ 7/03 CHECK ELF 8/03 DATE
QUANT. MSJ 7/03 CHECK ELF 8/03 BY

APPROVAL RECOMMENDED — LANDSCAPE ARCHITECT — DATE
APPROVED FOR PUBLICATION BY UDOT — PRECONSTRUCTION ENGINEER — DATE

WASHINGTON INTERCHANGE @ RP 13
IRRIGATION SHEET
PROJECT NUMBER #SP-15-1(20)13
WASHINGTON COUNTY
SHEET NO. IR-01

D:\Dot Files\Active Projects\2529.02\Sheet Files\Landscape\2529_IR-1.dgn
24-NOV-2003

SB I-15

I-15 ACCESS ROAD

PLACE IRRIGATION LINE
IN 4" PVC SCH. 40 SLEEVE
(TYPICAL)

2" IRRG. MAIN

SLEEVE, BORE AND JACK
A 3" DUCTILE IRON CASING
UNDER BOTH THE NORTH AND
SOUTH BOUND I-15 LANES
5' BELOW TOP OF PAVEMENT.
OBTAIN PERMIT FROM U.D.O.T.
BEFORE COMMENCING WORK.

NB I-15

RIVER ROCK (RED)

COBBLE

RIVER ROCK (GRAY)

RIVER ROCK (RED)

COBBLE

RIVER ROCK (RED)

EV

NATURAL AREA

AREA 1

COBBLE

COBBLE

SLEEVE

SLEEVE

2" IRRG. MAIN

4" PVC SCH. 40
SLEEVE

RIVER ROCK (GRAY)

SLEEVE

30+00

W W W W FUTURE 8" WATER LINE

25+00

"B"-LINE

2" PVC. SCH 40 IRRG. MAIN LINE

1-1/2" PRESSURE REGULATOR

1-1/2" REDUCED PRESSURE BACKFLOW
PREVENTER

1-1/2" WATER METER

POINT OF
CONNECTION

NOTE:
SEE DETAILS AND NOTES FOR FURTHER
INFOREMATION. SEE SHEET IR-01 FOR
IRRIGATION LEGEND AND MATERIAL LIST.

CALL BEFORE YOU DIG: 1-800-662-4111
BLUE STAKES UTILITIES PROTECTION CENTER
UNDERGROUND UTILITY SERVICE (USA)

NORTH

AREA 1 - IRRIGATION PLANS

STATE OF UTAH
EDWARD FRENCH
332751
LICENSED LANDSCAPE ARCHITECT

FRENCH & ASSOCIATES
LANDSCAPE ARCHITECTURE
SPORTS FACILITY DESIGN
LAND SURVEYING
URBAN DESIGN
1425 THIRD AVENUE
COLUMBUS, GEORGIA 31901
PHONE: (706) 324-6457

UTAH DEPARTMENT OF TRANSPORTATION
REGION 4 — RICHFIELD, UTAH
ROADWAY DESIGN

REVISIONS

NO.	DATE	REMARKS
		ORIGINAL SUBMISSION FOR AUTHORIZATION

DESIGN JSJ 7/03 CHECK ELF 8/03 REVIEW
DRAWN JSJ 7/03 CHECK ELF 8/03 DATE
QUANT. JSJ 7/03 CHECK ELF 8/03 BY

APPROVAL RECOMMD. _____ DATE _____ LANDSCAPE ARCHITECT
APPROVED FOR CONST. BY _____ DATE _____ PRECONSTRUCTION ENGINEER

WASHINGTON INTERCHANGE @ RP 13
IRRIGATION SHEET
AREA 1 - IRRIGATION PLANS
PROJECT NUMBER #SP-15-1(20)13
WASHINGTON COUNTY
SHEET NO. IR-02

24-NOV-2003
DGN File: N:\Projects\2828.02\Sheet Files\Landscape\2828_IR-2.dgn

"A"-LINE

4" PVC SCH. 40 SLEEVE

I-15 ACCESS ROAD

SLEEVE

COBBLE

RIVER ROCK (RED)

AREA 2

WILD FLOWER

WILD FLOWER

NATURAL AREA

EV

RIVER ROCK (GRAY)

2" IRRG. MAIN

COBBLE

RIVER ROCK (RED)

COBBLE

RIVER ROCK (GRAY)

WILD FLOWER

RIVER ROCK (GRAY)

RIVER ROCK (RED)

SLEEVE

COBBLE

RIVER ROCK (GRAY)

SB I-15

2" IRRG. MAIN

PLACE IRRIGATION LINE
IN 4" PVC SCH. 40 SLEEVE
(TYPICAL)

SLEEVE, BORE AND JACK
A 3" DUCTILE IRON CASING
UNDER BOTH THE NORTH AND
SOUTH BOUND I-15 LANES
5' BELOW TOP OF PAVEMENT.
OBTAIN PERMIT FROM U.D.O.T.
BEFORE COMMENCING WORK.

NOTE:
SEE DETAILS AND NOTES FOR FURTHER INFOREMATION. SEE SHEET IR-01 FOR IRRIGATION LEGEND AND MATERIAL LIST.

CALL BEFORE YOU DIG: 1-800-662-4111
BLUE STAKES UTILITIES PROTECTION CENTER
UNDERGROUND UTILITY SERVICE (USA)

NORTH

AREA 2 - IRRIGATION PLANS

FRENCH & ASSOCIATES
LANDSCAPE ARCHITECTURE
SPORTS FACILITY DESIGN
LAND SURVEYING
URBAN DESIGN
1425 THIRD AVENUE
COLUMBUS, GEORGIA 31901
PHONE: (706) 324-6457

STATE OF UTAH — EDWARD V. FRENCH — 332751 — LICENSED LANDSCAPE ARCHITECT

REVISIONS

NO.	DATE	REMARKS
		ORIGINAL SUBMISSION FOR AUTHORIZATION

DESIGN MSJ 7/03 — DRAWN MSJ 7/03 — CHECK ELF 8/03 — REVIEW
QUANT. MSJ 7/03 — CHECK ELF 8/03 — DATE — BY

UTAH DEPARTMENT OF TRANSPORTATION
REGION 4 — RICHFIELD, UTAH
ROADWAY DESIGN

APPROVAL RECOMMENDED: LANDSCAPE ARCHITECT — DATE
APPROVED FOR USE BY UDOT: PRECONSTRUCTION ENGINEER — DATE

WASHINGTON INTERCHANGE @ RP 13
IRRIGATION SHEET
AREA 2 - IRRIGATION PLANS
PROJECT NUMBER #SP-15-1(20)13
WASHINGTON COUNTY
SHEET NO. IR-03

DGN: Files:N:\Projects\2528.#FA\Sheet_Files\Landscape\2528_IR-3.dgn
4-NOV-2003

NOTE:
SEE DETAILS AND NOTES FOR FURTHER INFOREMATION. SEE SHEET IR-01 FOR IRRIGATION LEGEND AND MATERIAL LIST.

"A"-LINE

I-15 ACCESS ROAD

AREA 3

COBBLE

RIVER ROCK (RED)

NATURAL AREA

RIVER ROCK (GRAY)

COBBLE

NATURAL AREA

EV

SLEEVE

COBBLE

RIVER ROCK (RED)

COBBLE

RIVER ROCK (GRAY)

SB I-15

2" IRRG. MAIN

SLEEVE, BORE AND JACK A 3" DUCTILE IRON CASING UNDER BOTH THE NORTH AND SOUTH BOUND I-15 LANES 5' BELOW TOP OF PAVEMENT. OBTAIN PERMIT FROM U.D.O.T. BEFORE COMMENCING WORK.

PLACE IRRIGATION LINE IN 4" PVC SCH. 40 SLEEVE (TYPICAL)

CALL BEFORE YOU DIG: 1-800-662-4111
BLUE STAKES UTILITIES PROTECTION CENTER
UNDERGROUND UTILITY SERVICE (USA)

NORTH

AREA 3 - IRRIGATION PLANS

FRENCH & ASSOCIATES
LANDSCAPE ARCHITECTURE
SPORTS FACILITY DESIGN
LAND SURVEYING
URBAN DESIGN
1425 THIRD AVENUE
COLUMBUS, GEORGIA 31901
PHONE: (706) 324-6457

STATE OF UTAH — EDWARD L. FRENCH 332751 — LICENSED LANDSCAPE ARCHITECT

UTAH DEPARTMENT OF TRANSPORTATION
REGION 4 — RICHFIELD, UTAH
ROADWAY DESIGN

NO.	DATE	REVISIONS	REMARKS
		ORIGINAL SUBMISSION FOR AUTHORIZATION	

DESIGN WSJ 7/03 CHECK ELF 8/03 REVIEW
DRAWN WSJ 7/03 CHECK ELF 8/03 DATE
QUANT. WSJ 7/03 CHECK ELF 8/03 BY

APPROVAL RECOMMEND. — LANDSCAPE ARCHITECT — DATE
APPROVED FOR USE BY UDOT — PRECONSTRUCTION ENGINEER — DATE

WASHINGTON INTERCHANGE @ RP 13
IRRIGATION SHEET
AREA 3 - IRRIGATION PLANS
PROJECT NUMBER #SP-15-1(20)13
WASHINGTON COUNTY
SHEET NO. IR-04

24-NOV-2003
DGN: F:\Jet NA\Projects\2528 #2\Sheet Files\Landscape\2528_IR-4.dgn

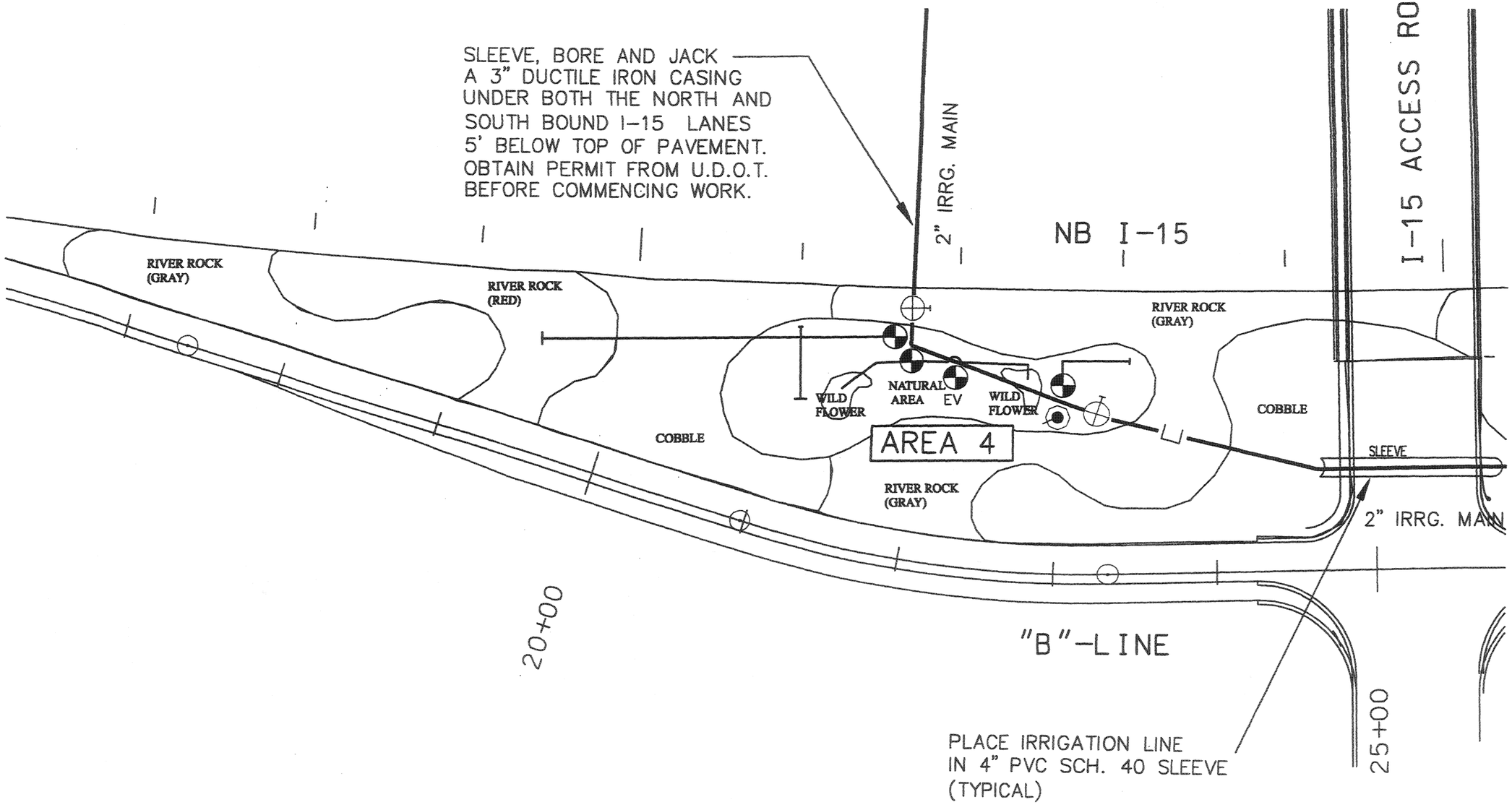

NOTE:
SEE DETAILS AND NOTES FOR FURTHER INFOREMATION. SEE SHEET IR-01 FOR IRRIGATION LEGEND AND MATERIAL LIST.

CALL BEFORE YOU DIG: 1-800-662-4111
BLUE STAKES UTILITIES PROTECTION CENTER
UNDERGROUND UTILITY SERVICE (USA)

NORTH

AREA 4 - IRRIGATION PLANS

STATE OF UTAH — EDWARD L. FRENCH — 332751 — LICENSED LANDSCAPE ARCHITECT

FRENCH & ASSOCIATES
LANDSCAPE ARCHITECTURE
SPORTS FACILITY DESIGN
LAND SURVEYING
URBAN DESIGN
1425 THIRD AVENUE
COLUMBUS, GEORGIA 31901
PHONE: (706) 324-6457

UTAH DEPARTMENT OF TRANSPORTATION
REGION 4 — RICHFIELD, UTAH
ROADWAY DESIGN

NO.	DATE	REMARKS
		ORIGINAL SUBMISSION FOR AUTHORIZATION

REVISIONS

DESIGN MSJ 7/03 CHECK ELF 8/03 REVIEW
DRAWN MSJ 7/03 CHECK ELF 8/03 DATE
QUANT. MSJ 7/03 CHECK ELF 8/03 BY

APPROVAL RECOMMENDED — DATE — LANDSCAPE ARCHITECT
APPROVED FOR UDOT — DATE — PRECONSTRUCTION ENGINEER

WASHINGTON INTERCHANGE @ RP 13
IRRIGATION SHEET
AREA 4 - IRRIGATION PLANS
PROJECT NUMBER #SP-15-1(20)13
WASHINGTON COUNTY
SHEET NO. IR-05

It is absolutely MANDATORY that ALL Contractors preparing Bids visit the site prior to submitting their Bids to do a site inventory. All existing designated plant material in the "Natural Areas" will require irrigation in accordance with Details (2 emitters per shrub, and 4 emitters per tree) See the Planting Plan for exact locations.

Irrigation plan is diagrammatic: make minor adjustments to avoid trees, shrubs, sidewalks, and utility lines. Do not trench within the drip line of existing trees noted to be saved.

Consult Landscape Architect if utility locations require more than minor adjustments to equipment. Verify the depth of existing utilities, sanitary sewer, and storm drainage and assure that irrigation piping clears a minimum of 4 inches in any direction. In areas where passing over utilities or obstructions would require irrigation piping to be set less than 12 inches from top of pipe to finished grade, piping shall be installed deeper to pass beneath lines and to meet the minimum clearance requirements.

The Contractor shall furnish the Landscape Architect with every reasonable facility for ascertaining whether or not the Work performed and the products used are in accordance with the intent and requirements of the Specifications and Contract Documents.
No Work shall be done or products used without suitable review by the Landscape Architect.

Review of the Work shall not relieve the Contractor of any obligations to fulfill the Contract. Defective Work shall be made good regardless of whether such Work has been previously reviewed by the Landscape Architect or Owner's Representative and accepted or estimated for payment. The failure to reject improper Work shall not be considered a waiver of any defect which may be discovered later, or for Work actually defective.

Use extreme caution when trenching !!! Verify utility locations and clearly and legibly mark utilities before commencing Work. Irrigation work must have a Call Before You Dig project number submitted to the Landscape Architect prior to commencing work. Arrange a pre-construction inspection with Owner's Representative and Landscape Architect to verify utility locations and special conditions.

Failure to reject any defective Work or product shall not in any way prevent later rejection when such defect is discovered, or obligate the Owner to final acceptance.

Lateral piping shall be Schedule 40 PVC in all cases, except where funny-pipe connections are used.

Contractor Shall provide U.D.O.T. and Washington City As-built drawings at the conclusion of the job.

Irrigation Notes

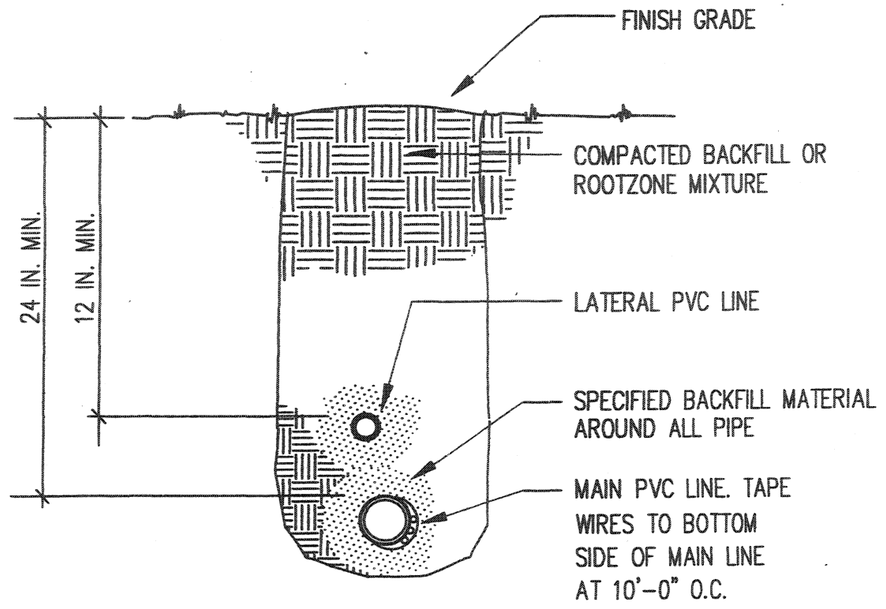

Irrigation Trench w/ Piping

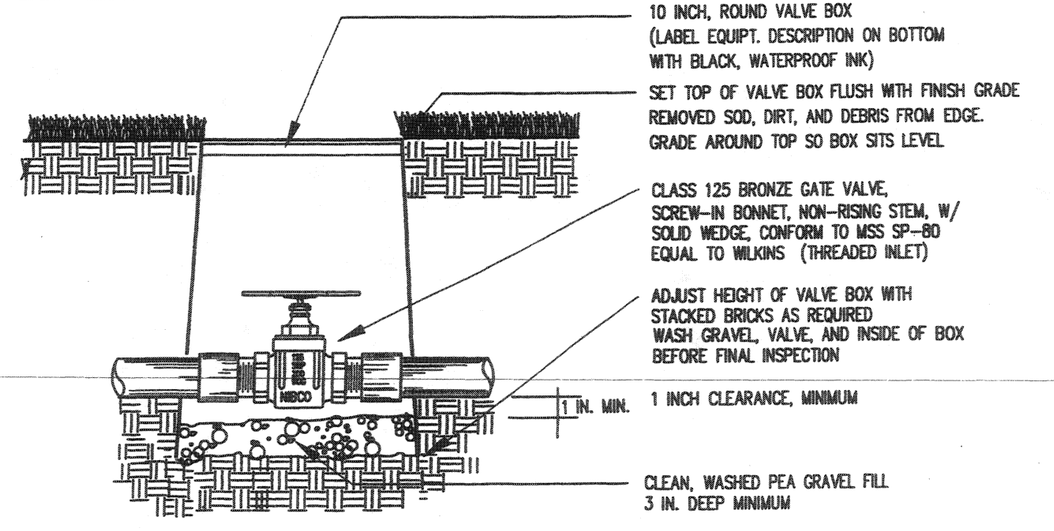

Mainline Cast-Iron Gate Valve

STATE OF UTAH — EDWARD L. FRENCH — 332751 — LICENSED LANDSCAPE ARCHITECT

FRENCH & ASSOCIATES
LANDSCAPE ARCHITECTURE
SPORTS FACILITY DESIGN
LAND SURVEYING
URBAN DESIGN
1425 THIRD AVENUE
COLUMBUS, GEORGIA 31901
PHONE: (706) 324-6457

UTAH DEPARTMENT OF TRANSPORTATION
— RICHFIELD, UTAH
REGION 4
ROADWAY DESIGN

NO.	DATE	REMARKS	BY
		ORIGINAL SUBMISSION FOR AUTHORIZATION	

REVISIONS

DESIGN MSL 7/03 — CHECK ELF 8/03 — REVIEW
DRAWN MSL 7/03 — CHECK ELF 8/03 — DATE
QUANT. MSL 7/03 — CHECK ELF 8/03 — BY

RECOMMENDED — DATE — LANDSCAPE ARCHITECT
APPROVED FOR USE BY UDOT — DATE — RECONSTRUCTION ENGINEER

WASHINGTON INTERCHANGE @ RP 13

IRRIGATION SHEET

IRRIGATION NOTES AND DETAILS

PROJECT NUMBER #SP-15-1(20)13

WASHINGTON COUNTY

SHEET NO. IR-06

DGN: File:\NP\projects\2003_PA\Sheets_Files\Landscape\V2003_IR-6_DETAILS.dgn
24-NOV-2003

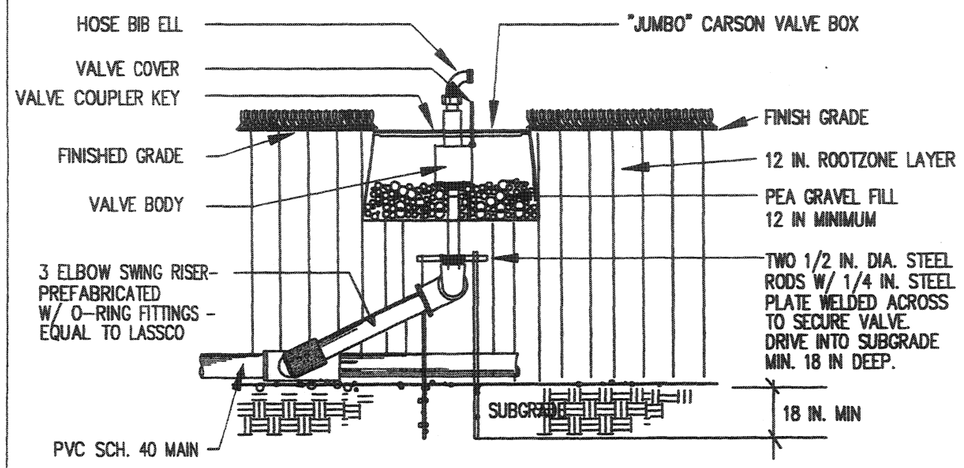

NOTE:
DO NOT INSTALL SWING RISERS FULLY EXTENDED.

Quick Coupling Valve Installation

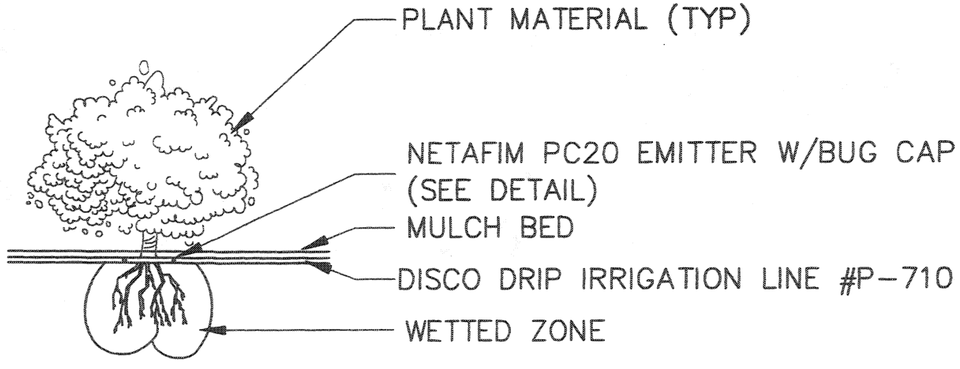

Emitter Spacing

LEGEND

- Netafim PC20 Emitter W/Bug Cap
- 1" PVC SCH 40 MAIN DRIP LINE
- Disco Drip Irrigation Line #P-710

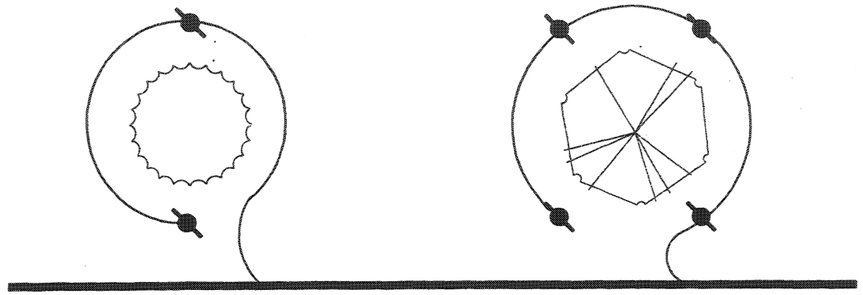

SHRUBS TREES

Drip Emitter Detail for trees and Shrubs

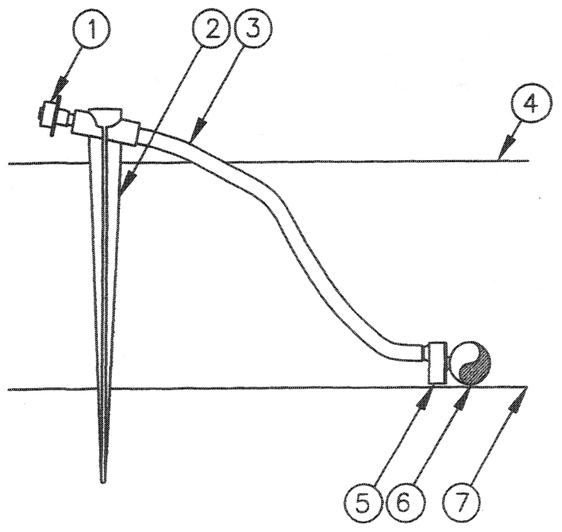

1. DIFFUSER BUG CAP:
2. 6" STAKE NETAFIM SOIL STAPLE
3. 1/4-INCH VINYL DISTRIBUTION TUBING
4. TOP OF MULCH
5. SINGLE-OUTLET EMITTER: NETAFIM PC20 PRESSURE COMPENSATING EMITTER
6. PE PIPE: DISCO #P-710
7. FINISH GRADE

Emitter into Drip Tubing

STATE OF UTAH — LICENSED LANDSCAPE ARCHITECT — EDWARD FRENCH — 332751

FRENCH & ASSOCIATES
LANDSCAPE ARCHITECTURE
SPORTS FACILITY DESIGN
LAND SURVEYING
URBAN DESIGN
1425 THIRD AVENUE
COLUMBUS, GEORGIA 31901
PHONE: (706) 324-6457

UTAH DEPARTMENT OF TRANSPORTATION
REGION 4 — RICHFIELD, UTAH
ROADWAY DESIGN

DESIGN MSL 7/03 CHECK ELF 8/03 REVIEW
DRAWN MSL 7/03 CHECK ELF 8/03 DATE
QUANT. MSL 7/03 CHECK ELF 8/03 BY

NO.	DATE	REVISION BY/APPROVED	MADE CORR. BY/APPROVED	PARCEL # APPROVED	REMARKS
					ORIGINAL SUBMISSION FOR AUTHORIZATION

REVISIONS

RECOMMENDED: LANDSCAPE ARCHITECT DATE
APPROVED AS TO USE BY: PRECONSTRUCTION ENGINEER DATE

WASHINGTON INTERCHANGE @ RP 13
IRRIGATION SHEET
IRRIGATION NOTES AND DETAILS
PROJECT NUMBER #SP-15-1(120)13
WASHINGTON COUNTY
SHEET NO. IR-07

24-NOV-2003 DGN: F:\as-built\Projects\3629_IR\Sheets_Files\Landscape\3629_IR-7_DETAILS.dgn

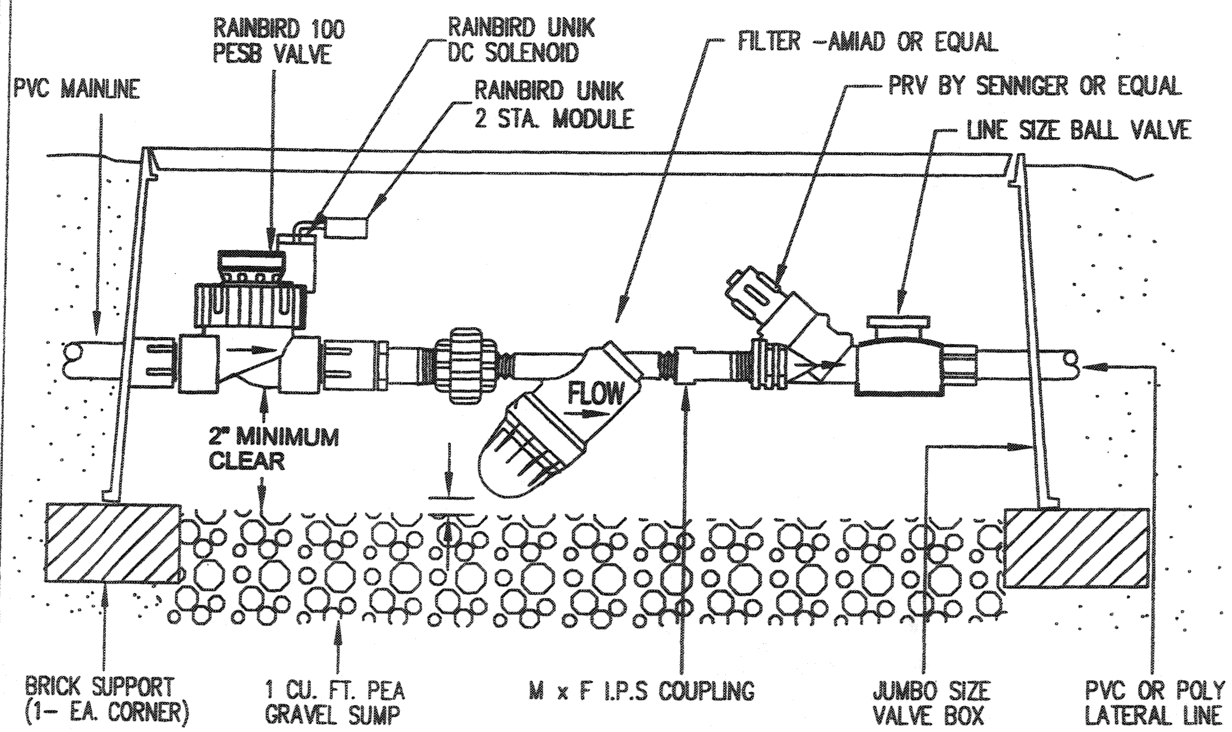

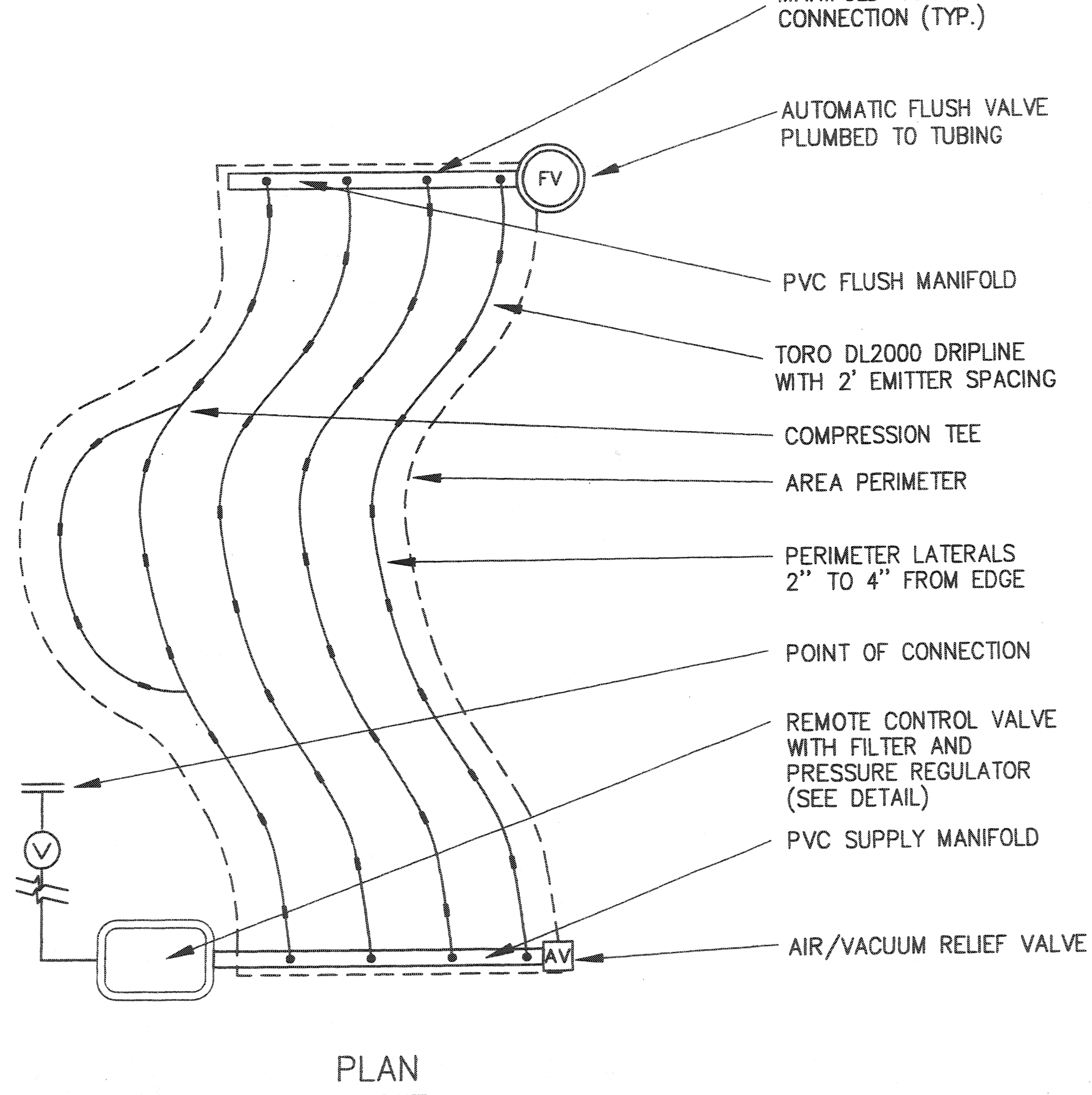

Remote Control Valve with PRV & Filter

Toro DL 2000 Drip Tubing for Wild Flower Areas

FRENCH & ASSOCIATES
LANDSCAPE ARCHITECTURE
SPORTS FACILITY DESIGN
LAND SURVEYING
URBAN DESIGN
1425 THIRD AVENUE
COLUMBUS, GEORGIA 31901
PHONE: (706) 324-6457

STATE OF UTAH — EDWARD L. FRENCH — 332751 — LICENSED LANDSCAPE ARCHITECT

UTAH DEPARTMENT OF TRANSPORTATION
REGION 4 — RICHFIELD, UTAH
ROADWAY DESIGN

DESIGN WSJ 7/03 — CHECK ELF 8/03
DRAWN WSJ 7/03 — CHECK ELF 8/03
QUANT. WSJ 7/03 — CHECK ELF 8/03

WASHINGTON INTERCHANGE @ RP 13
IRRIGATION SHEET
IRRIGATION NOTES AND DETAILS
PROJECT NUMBER #SP-15-1(20)13

WASHINGTON COUNTY
SHEET NO. IR-08

REVISIONS
ORIGINAL SUBMISSION FOR AUTHORIZATION

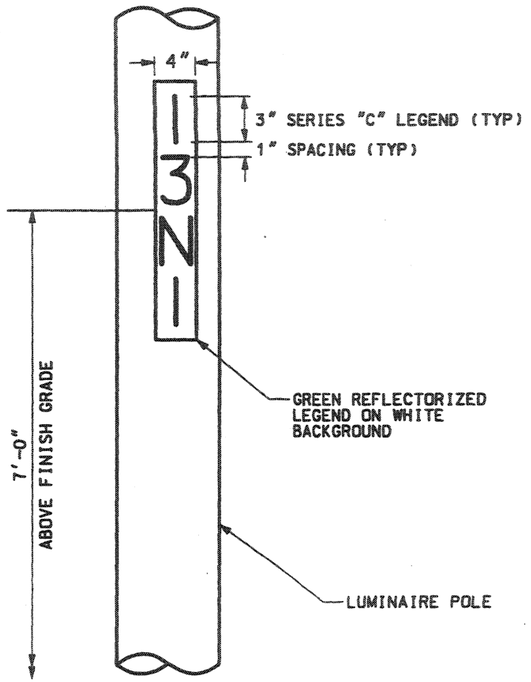

DETAIL

LUMINAIRE POLE IDENTIFICATION

LIGHTING NOTES:

1. ALL UNITS ARE IN FEET UNLESS OTHERWISE NOTED.
2. LABEL LUMINAIRES BY LIGHT POLE IDENTIFICATION. SEE SPECIAL PROVISION 16525M.
3. REFER TO LUMINAIRE POLE SCHEDULE ON LT-02 THROUGH LT-05 FOR LOCATION.
4. LOCATE EXISTING UTILITIES PRIOR TO BEGINNING ANY EXCAVATION. UTILITY LOCATIONS SHOWN ARE APPROXIMATE. CALL BLUE STAKES (1-800-662-4711) PRIOR TO CONSTRUCTION.
5. CONTACT KELLY CARLSON OF WASHINGTON CITY POWER AT 435-656-6317 FOR POWER SOURCE AND HOOKUP INFORMATION. CONTACT AT LEAST 30 DAYS PRIOR TO DATE POWER IS REQUIRED. 480 VOLT SINGLE PHASE IS REQUIRED FOR THIS PROJECT.
6. PROVIDE TRANSFORMER, RISER, STANDOFFS, AND CONDUCTORS TO DELIVER POWER TO UNDERGROUND SERVICE PEDESTRAL.
7. LUMINAIRE CALL-OUTS ARE TO CENTER OF FOUNDATION.
8. ADJUST LIGHT POLE LOCATION AS APPROVED BY ENGINEER TO AVOID CONFLICT WITH UTILITIES AND OTHER MAJOR FEATURES.
9. AVOID DAMAGE TO EXISTING AND NEW UTILITIES. ASSUME FULL RESPONSIBILITY FOR ANY UTILITY DAMAGED BY CONSTRUCTION OPERATION.
10. INSTALL LUMINAIRE ASSEMBLIES PER PLANS. INCLUDE ALL WORKMANSHIP AND MATERIALS NECESSARY FOR A COMPLETE AND FULLY OPERATIONAL HIGHWAY LIGHTING SYSTEM.
11. LUMINAIRE ASSEMBLY IS STATE FURNISHED AND INCLUDES THE POLE, ARM EXTENSION, ANCHOR BOLTS, AND LUMINAIRE FIXTURE.
12. INSTALL LUMINAIRE POLE FOUNDATION PER UDOT STD DWG SL 14.

ATMS CONDUIT

CIRCUIT	SCHEDULE 80 PVC CONDUIT (FT)	TRENCHING & BACKFILL (FT)	TYPE I-PC JUNCTION BOX	TYPE II-PC JUNCTION BOX	TYPE III-PC JUNCTION BOX
	2"		EACH	EACH	EACH
NB I-15	6400	6400	-	-	3
I-15 ACCESS RD	1350	1350	1	2	1
TOTAL	7750	7750	1	2	4
USE	**	**	**	**	**

** THESE ITEMS ARE COMBINED ON ESTIMATE AS ATMS CONDUIT FOR INFORMATION ONLY

CIRCUIT SCHEDULE

CIRCUIT	SCHEDULE 80 PVC CONDUIT (FT)		RHH-USE-RHW CABLE (FT)		15 KV 220 MIL EPR W/ 1/3 NEUTRAL (FT)	GROUND AWG NO. 6 (FT)	TRENCHING & BACKFILL (FT)	5/8" x 8'-0" COPPER COATED GROUND ROD (EACH)	TYPE I-PC JUNCTION BOX (EACH)
	1 1/2"	2"	NO.6						
NB RAMP	50	2474	6274			3137	2524	8	8
SB RAMP	50	2356	5392			2696	2406	8	8
POWER		262			282		262	1	1
FUTURE-USE		20					20	2	2
TOTAL	100	5112	11666		282	5833	5212	19	19
USE	*	*	*		*	*	*	*	*

* THESE ITEMS ARE COMBINED ON ESTIMATE AS HIGHWAY LIGHTING SYSTEM.
FOR INFORMATION ONLY

STATE FURNISHED ITEMS

CIRCUIT	40' FREEWAY LIGHT POLE W/15' ARM	400 WATT/480 VOLT FULL CUT OFF LUMINAIRE	1" x 36" ANCHOR BOLT SET
	EACH	EACH	EACH
NB RAMP	5	5	20
SB RAMP	5	5	20
TOTAL	10	10	40
USE	10	10	40

UTAH DEPARTMENT OF TRANSPORTATION
REGION 4 - RICHFIELD, UTAH
ROADWAY DESIGN

REVISIONS

NO.	DATE	REMARKS
		ORIGINAL SUBMISSION FOR AUTHORIZATION

DESIGN CHECK
DRAWN CHECK
QUANT. CHECK
REVIEW
DATE
BY
APPROVAL RECOMMENDED — DATE — PROJECT DESIGN ENGINEER
APPROVED — DATE — PRECONSTRUCTION ENGINEER

WASHINGTON INTERCHANGE @ MP 13
LIGHTING SHEET
DETAIL SHEET
PROJECT NUMBER #SP-15-1(20)13
WASHINGTON COUNTY
SHEET NO. LT-1

T. 4S S. 12 S.L.B. & M. R. 1W W.

LEGEND:

- LUMINAIRE ASSEMBLY INCLUDES BREAKAWAY LUMINAIRE POLE WITH ARM AND 480V, 400W, FULL CUTOFF LUMINAIRE.
- 2" PVC, SCHEDULE 80 CONDUIT
- SB RAMP CIRCUIT
- NB RAMP CIRCUIT
- POWER SOURCE CIRCUIT
- ATMS CIRCUIT
- TYPE I-PC JUNCTION BOX WITH 5/8" x 8'-0" GROUND ROD

1/4 SECTION LINE

Exist. Highway R/W & N/A Line

HIGHWAY R/W & N/A LINE

Exist. Highway R/W & L/A Line

HIGHWAY R/W & N/A LINE

PT 21+10.18

20+00

15+00

PC 10+00.00

PC 305+49.53

"A" LINE

N44°54'25"E

S70°15'21"W

SB I-15

300+00

305+00

POB 10+00.00

CP-15-22
N 199824.060
E 99626.750
Z 3009.68

PC 308+01.34

310+00

CP-90-23
N 200000.000
E 100000.000
Z 2996.65

N68°08'43"E

NB I-15

13N1

13N2

13N3

"B" LINE

N75°50'35"E

0+00

5+00

40' CRE LINE

PC 16+11.38

PC 17+40.46

INSTALL AT EDGE OF PROJECT LIMIT

NB RAMP CIRCUIT
(2) NO. 6 AWG WITH
(1) NO. 6 GROUND WIRE
(TYP.)

INSTALL NEXT TO RIGHT OF WAY FENCE (6)

Exist. Highway R/W & N/A Line

Exist. Highway R/W & N/A Line

HIGHWAY R/W & N/A LINE

ATMS NOTES:

(4) TYPE III-PC JUNCTION BOX REQ'D. NEW CONDUIT INTO NEW JUNCTION BOX. SEE UDOT STD. DWG. AT-7.

(6) 1D ATMS CONDUIT TRENCHED IN NATIVE EARTH REQ'D.

LUMINAIRE POLE SCHEDULE				
POLE ID	STA.	OFFSET	MOUNTING HEIGHT	ARM LENGTH
13N1	304+00	29' RT	40'	15'
13N2	11+50	17' RT	40'	15'
13N3	14+00	17' RT	40'	15'

FUTURE USE CONDUIT TO BE PLACED IN TOP PORTION OF TRENCH FOR EASIER ACCESS

MINIMUM COVER

SIGNAL AND LIGHTING CONDUITS (TYP.)

DETAIL "A"

TRENCHING NOTES:

1. PROVIDE MINIMUM COVER FOR ALL ROADWAY CROSSINGS: 24" FOR CONDUIT PLACED IN TRENCH; 36" FOR DIRECTIONAL BORE CONDUIT.
2. PROVIDE 18" MINIMUM COVER FOR CONDUIT PLACED OFF ROADWAY WITHOUT CONCRETE ENCASEMENT OR CAPPING.
3. PROVIDE 12" MINIMUM COVER FOR CONDUIT PLACED OFF ROADWAY WITH CONCRETE ENCASEMENT OR MINIMUM 2" THICK CONCRETE CAPPING.

REVISIONS

NO.	DATE	REMARKS
		ORIGINAL SUBMISSION FOR AUTHORIZATION

UTAH DEPARTMENT OF TRANSPORTATION
REGION 4 - RICHFIELD, UTAH
ROADWAY DESIGN

REVIEW BY DATE CHECK

DESIGN CHECK

DRAWN CHECK

QUANT. CHECK

APPROVAL RECOMMD. DATE PROJECT DESIGN ENGINEER

APPROVED DATE RECONSTRUCTION ENGINEER

WASHINGTON INTERCHANGE @ MP 13

LIGHTING SHEET

PROJECT NUMBER #SP-15-1(20)13

WASHINGTON COUNTY

SHEET NO. LT-2

LEGEND:

- LUMINAIRE ASSEMBLY INCLUDES BREAKAWAY LUMINAIRE POLE WITH ARM AND 480V, 400W, FULL CUTOFF LUMINAIRE.
- 2" PVC, SCHEDULE 80 CONDUIT
- SB RAMP CIRCUIT
- NB RAMP CIRCUIT
- POWER SOURCE CIRCUIT
- ATMS CIRCUIT
- TYPE I-PC JUNCTION BOX WITH 5/8" x 8'-0" GROUND ROD

NOTES:

1. PROVIDE 42" COVER FOR PRIMARY POWER CONDUIT LOCATED BETWEEN POWER SOURCE AND UNDERGROUND SERVICE PEDESTAL.

SB RAMP CIRCUIT
15 KV 220 MIL
EPR W/ 1/3 NEUTRAL
SEE NOTE 1

POWER SOURCE

HIGHWAY R/W & N/A LINE

UNDERGROUND SERVICE PEDESTAL

TYPE I - PC JUNCTION BOX

480 V, 1 Φ GROUND MOUNTED TRANSFORMER, SEE NOTE 6 ON SHEET LT-1.

SB RAMP CIRCUIT
(2) NO. 6 AWG WITH
(1) NO. 6 GROUND WIRE
(TYP.)

TORTOISE HABITAT BOUNDARY

"A" LINE

N56°56'18"E

13S4

13S5

PT 21+10.48

N44°54'25"E

PC 21+04.41

PT 25+47.32

PC 28+63.62

PT 29+88.46

PC 33+92.36

N66°49'24"E

I-15 ACCESS ROAD

NB RAMP CIRCUIT
(2) NO. 6 AWG WITH
(1) NO. 6 GROUND WIRE
(TYP.)

CONNECT TO BRIDGE PARAPET CONDUIT

INSTALL 1D ATMS CONDUIT IN OVERPASS STRUCTURE PARAPET

(2) NO. 6 AWG WITH
(1) NO. 6 GROUND

CONNECT TO BRIDGE PARAPET CONDUIT FOR FUTURE-USE

SB I-15

PROVIDE MULE TAPE IN FUTURE-USE CONDUIT

315+00

320+00

325+00

SEE SHEET NO. LT-4 FOR CONTINUATION OF NB RAMP CIRCUIT

1/4 SECTION LINE

1/4 SECTION LINE

LUMINAIRE POLE SCHEDULE				
POLE ID	STA.	OFFSET	MOUNTING HEIGHT	ARM LENGTH
13S4	27+41.7	68'RT	40'	15'
13S5	26+22	28.5'RT	40'	15'

ATMS NOTES:

(4) TYPE III-PC JUNCTION BOX REQ'D. NEW CONDUIT INTO NEW JUNCTION BOX. SEE UDOT STD. DWG. AT-7.

(6) 1D ATMS CONDUIT TRENCHED IN NATIVE EARTH REQ'D.

REVISIONS

NO.	DATE	REMARKS
		ORIGINAL SUBMISSION FOR AUTHORIZATION

DESIGNED | DRAWN | CHECKED | QUANTITIES | CHECKED | DATE | PROJECT ENGINEER | DATE | PRECONSTRUCTION ENGINEER | DATE | APPROVAL RECOMM. | APPROVED

UTAH DEPARTMENT OF TRANSPORTATION
REGION 4 - RICHFIELD, UTAH
ROADWAY DESIGN

REVIEW | DESIGN | CHECK | DRAWN | CHECK | QUANT. | CHECK | DATE | BY

WASHINGTON INTERCHANGE @ MP 13

LIGHTING SHEET

PROJECT NUMBER #SP-15-1(20)13

WASHINGTON COUNTY

SHEET NO. LT-3

LEGEND:

- LUMINAIRE ASSEMBLY INCLUDES BREAKAWAY LUMINAIRE POLE WITH ARM AND 480V, 400W, FULL CUTOFF LUMINAIRE.
- 2" PVC, SCHEDULE 80 CONDUIT
- SB RAMP CIRCUIT
- NB RAMP CIRCUIT
- POWER SOURCE CIRCUIT
- ATMS CIRCUIT
- TYPE I-PC JUNCTION BOX WITH 5/8" x 8'-0" GROUND ROD

315+00 320+00 325+00

SEE SHEET LT-3 FOR CONTINUATION OF NB RAMP CIRCUIT.

1/4 SECTION LINE

PROVIDE MULE TAPE IN FUTURE-USE CONDUIT

INSTALL 1D ATMS CONDUIT IN OVERPASS STRUCTURE

NB I-15

I-15 ACCESS ROAD

CP-15-23
N 200150.940
E 100529.020
Z 3010.090

CONNECT TO BRIDGE PARAPET CONDUIT FOR FUTURE-USE.

CONNECT TO BRIDGE PARAPET CONDUIT

CP-15-24
N 200691.440
E 101347.580
Z 3019.330

PC 20+97.59

PT 23+32.62

PC 26+91.74

PT 29+59.34

N75°50'35"E

N56°36'18"E

N34°42'5"E

"B" LINE

Exist Highway R/W & N/A Line

13N5

13N4

NB RAMP CIRCUIT
(2) NO. 6 AWG WITH
(1) NO. 6 GROUND WIRE
(TYP.)

HIGHWAY R/W & N/A LINE

1/4 SECTION LINE

1D ATMS CONDUIT RUN TO WASHINGTON BLVD WITH TYPE II-PC BOX.

LUMINAIRE POLE SCHEDULE				
POLE ID	STA.	OFFSET	MOUNTING HEIGHT	ARM LENGTH
13N4	24+74.6	78'RT	40'	15'
13N5	25+93	28.5'RT	40'	15'

ATMS NOTES:

(3) TYPE II-PC JUNCTION BOX REQ'D. NEW CONDUIT INTO NEW JUNCTION BOX. SEE UDOT STD. DWG. AT-7.

(4) TYPE III-PC JUNCTION BOX REQ'D. NEW CONDUIT INTO NEW JUNCTION BOX. SEE UDOT STD. DWG. AT-7.

(6) 1D ATMS CONDUIT TRENCHED IN NATIVE EARTH REQ'D.

(8) 2" PVC CONDUIT TRENCHED IN NATIVE EARTH REQ'D.

T. 42 S., S.L.B.&M. SEC. 12 R. 15 W.

NO. | DATE | REVISIONS | BY | APPROVED | REMARKS
ORIGINAL SUBMISSION FOR AUTHORIZATION

UTAH DEPARTMENT OF TRANSPORTATION
REGION 4 - RICHFIELD, UTAH
ROADWAY DESIGN

DESIGN | CHECK | REVIEW
DRAWN | CHECK | DATE
QUANT. | CHECK | BY

APPROVAL RECOMMENDED — PROJECT DESIGN ENGINEER — DATE
APPROVED — PRECONSTRUCTION ENGINEER — DATE

WASHINGTON INTERCHANGE @ MP 13

LIGHTING SHEET

PROJECT NUMBER #SP-15-1(20)13

WASHINGTON COUNTY

SHEET NO. LT-4

LEGEND:

- LUMINAIRE ASSEMBLY INCLUDES BREAKAWAY LUMINAIRE POLE WITH ARM AND 480V, 400W, FULL CUTOFF LUMINAIRE.
- 2" PVC, SCHEDULE 80 CONDUIT
- SB RAMP CIRCUIT
- NB RAMP CIRCUIT
- POWER SOURCE CIRCUIT
- ATMS CIRCUIT
- TYPE I-PC JUNCTION BOX WITH 5/8" x 8'-0" GROUND ROD

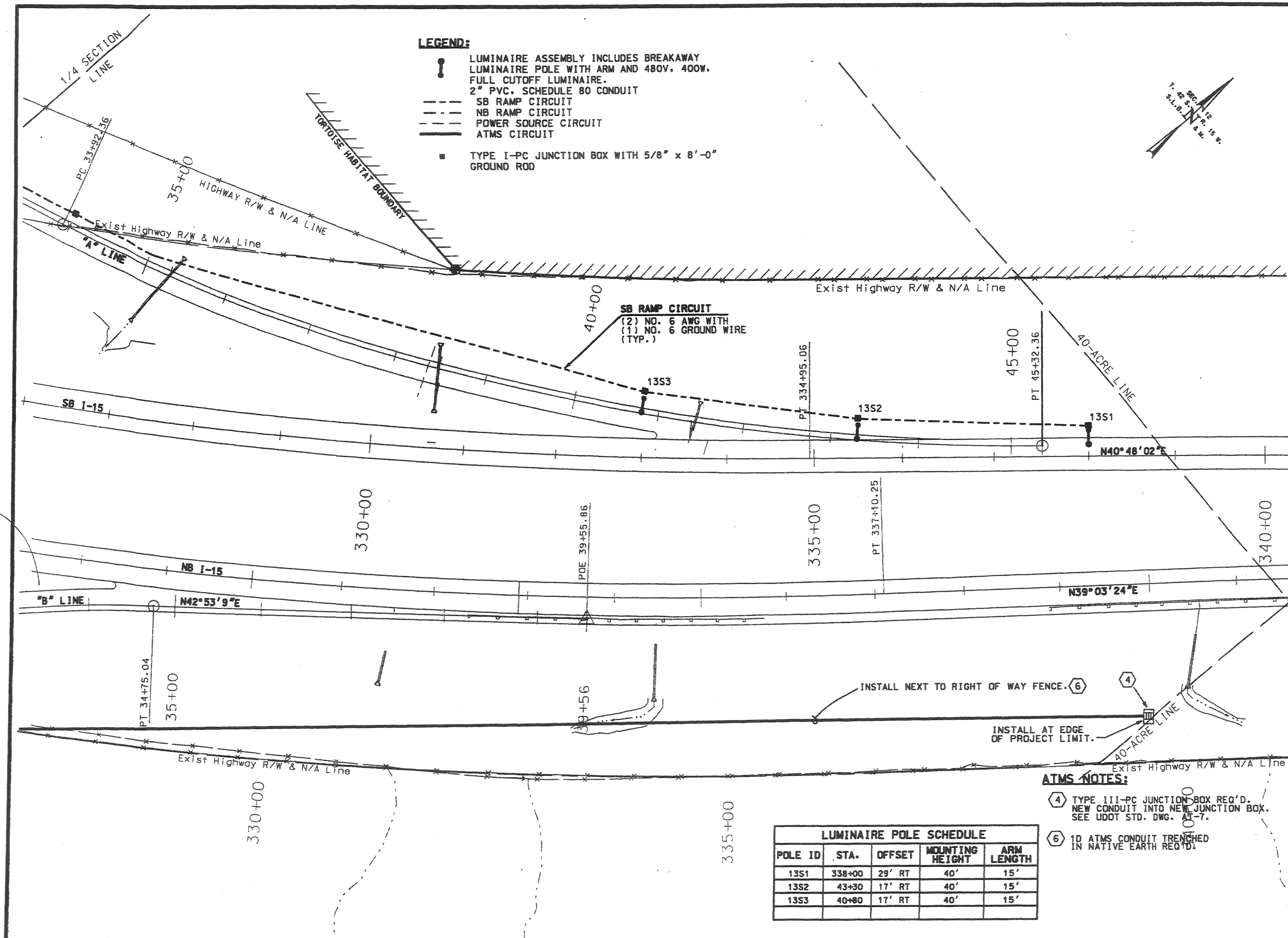

ATMS NOTES:

(4) TYPE III-PC JUNCTION BOX REQ'D. NEW CONDUIT INTO NEW JUNCTION BOX. SEE UDOT STD. DWG. AT-7.

(6) 1D ATMS CONDUIT TRENCHED IN NATIVE EARTH REQ'D.

LUMINAIRE POLE SCHEDULE				
POLE ID	STA.	OFFSET	MOUNTING HEIGHT	ARM LENGTH
13S1	338+00	29' RT	40'	15'
13S2	43+30	17' RT	40'	15'
13S3	40+80	17' RT	40'	15'

NO.	DATE	DESIGN MAPS REV. BY	PARCELS AFFECTED COOR. BY	REQUEST BY	REMARKS

ORIGINAL SUBMISSION FOR AUTHORIZATION — DATE

REVISIONS

UTAH DEPARTMENT OF TRANSPORTATION

REGION 4 - RICHFIELD, UTAH
ROADWAY DESIGN

APPROVAL RECOMM. ____ DATE ____ PROJECT DESIGN ENGINEER
APPROVED ____ DATE ____ PRECONSTRUCTION ENGINEER
DESIGN ____ CHECK ____
DRAWN ____ CHECK ____
QUANT. ____ CHECK ____
REVIEW — DATE ____ BY ____

WASHINGTON INTERCHANGE @ MP 13

LIGHTING SHEET

PROJECT NUMBER #SP-15-1(20)13

WASHINGTON COUNTY

SHEET NO. LT-5

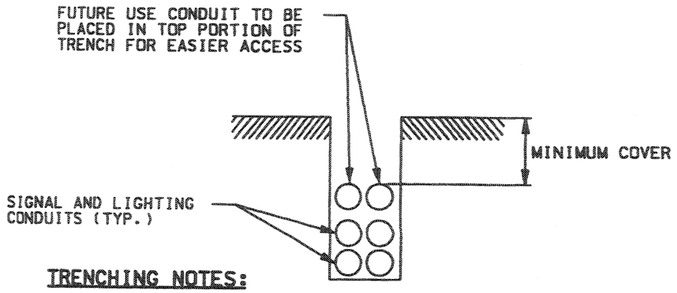

TRENCHING NOTES:

1- PROVIDE MINIMUM COVER FOR ALL ROADWAY CROSSINGS: 24" FOR CONDUIT PLACED IN TRENCH; 36" FOR DIRECTIONAL BORE CONDUIT.

2- PROVIDE 18" MINIMUM COVER FOR CONDUIT PLACED OFF ROADWAY WITHOUT CONCRETE ENCASEMENT OR CAPPING.

3- PROVIDE 12" MINIMUM COVER FOR CONDUIT PLACED OFF ROADWAY WITH CONCRETE ENCASEMENT OR MINIMUM 2" THICK CONCRETE CAPPING.

TRENCHING DETAIL

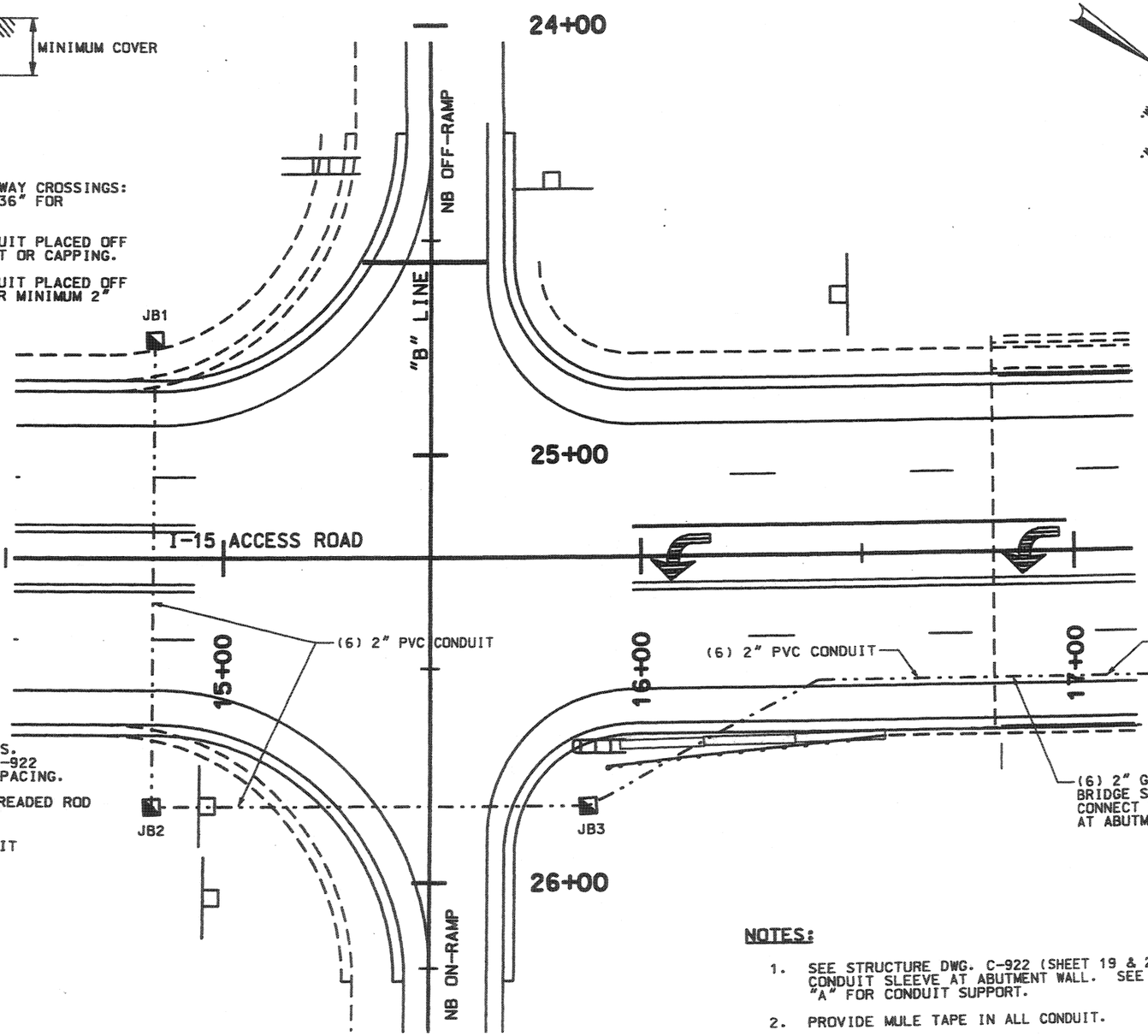

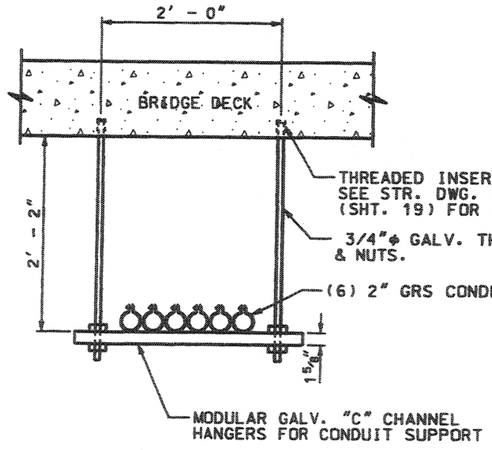

DETAIL "A"
CONDUIT SUPPORT

NOTES:

1. SEE STRUCTURE DWG. C-922 (SHEET 19 & 20) FOR CONDUIT SLEEVE AT ABUTMENT WALL. SEE DETAIL "A" FOR CONDUIT SUPPORT.
2. PROVIDE MULE TAPE IN ALL CONDUIT.
3. PLUG CONDUIT ENDS AT ALL JUNCTION BOXES.
4. INSTALL 5/8" x 8' COPPER COATED STEEL GROUND ROD AT EACH TYPE II-PC JUNCTION BOX.
5. SEE SHEET NO. SG-2 FOR JUNCTION BOX SCHEDULE.
6. SHARE CONDUIT TRENCH WITH LIGHTING AND ATMS CONDUIT. SEE LIGHTING AND ATMS SHEETS FOR MORE INFORMATION.

T. 42 S., R. 15 W., SEC. 12 S.L.B.&M.

UTAH DEPARTMENT OF TRANSPORTATION
REGION 4 — RICHFIELD, UTAH
ROADWAY DESIGN

DESIGN LJM 08/03 CHECK RLC 08/03 REVIEW
RCC: 08/03 1.1M 08/03

WASHINGTON INTERCHANGE @ RP 13
MP 13 ACCESS ROAD OVER I-15
SIGNAL PLAN

WASHINGT COUNTY

SHEET NO. SG

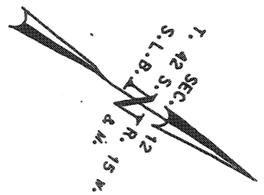

SIGNAL SCHEDULE							
LOCATION	2" PVC CONDUIT	2" GRS CONDUIT	TYPE I-PC JUNCTION BOX	TYPE II-PC JUNCTION BOX	5/8" x 8' COPPER COTATED GROUND ROD	TRENCHING & BACKFILL	CONDUIT SUPPORT
	FT	FT	EA	EA	EA	FT	EA
NB RAMP	1,890			3	3	100	
BRIDGE C-922		1,950					32
SB RAMP	2,876		2	4	4	175	
TOTAL	4,766	1,950	2	7	7	275	32
USE	*	*	*	*	*	*	*

FOR INFORMATION ONLY

* THESE ITEMS ARE COMBINED ON ESTIMATE AS TRAFFIC SIGNAL SYSTEM CONDUIT.

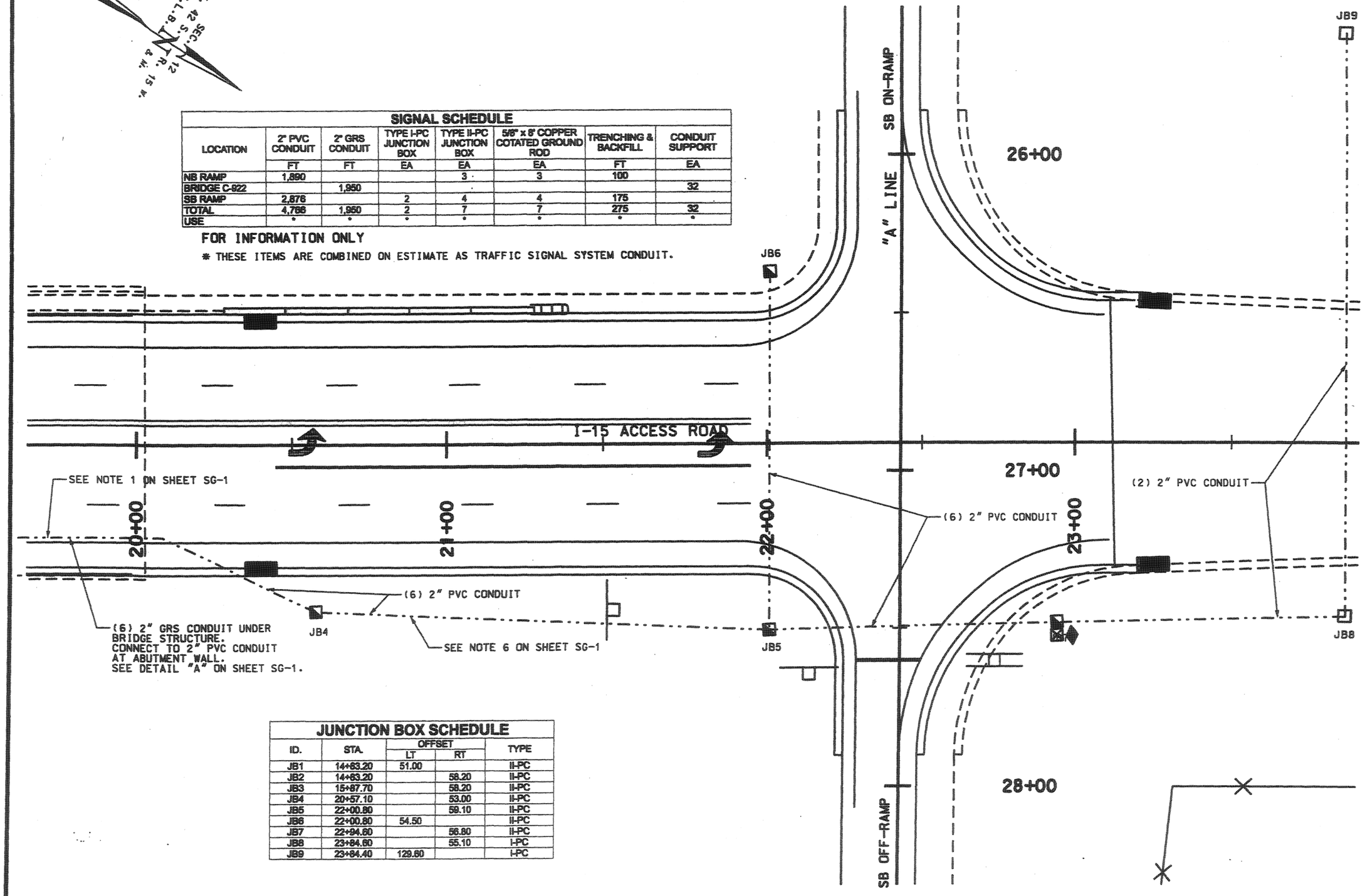

JUNCTION BOX SCHEDULE				
ID.	STA.	OFFSET LT	OFFSET RT	TYPE
JB1	14+63.20	51.00		II-PC
JB2	14+63.20		58.20	II-PC
JB3	15+87.70		58.20	II-PC
JB4	20+57.10		53.00	II-PC
JB5	22+00.80		59.10	II-PC
JB6	22+00.80	54.50		II-PC
JB7	22+94.60		56.80	II-PC
JB8	23+84.60		55.10	I-PC
JB9	23+84.40	129.60		I-PC

UTAH DEPARTMENT OF TRANSPORTATION
REGION 4 — RICHFIELD, UTAH
ROADWAY DESIGN

DESIGN LJM 08/03 | CHECK RLC 08/03 | REVIEW
DRAWN RCC 08/03 | CHECK LJM 08/03 | DATE | BY
QUANT. RCC 08/03 | CHECK LJM 08/03

REVISIONS

NO.	DATE	REMARKS
		ORIGINAL SUBMISSION FOR AUTHORIZATION

RECOMMENDED FOR APPROVAL — DATE — PROJECT DESIGN ENGINEER
APPROVED FOR RELEASE BY UDOT — DATE — PRECONSTRUCTION ENGINEER

WASHINGTON INTERCHANGE @ RP 13
MP 13 ACCESS ROAD OVER I-15
SIGNAL PLAN
PROJECT NUMBER #SP-15-1(20)13

WASHINGTON COUNTY

SHEET NO. SG-2

U.S. Standard Units
(Inch-Pound Units)

UTAH
DEPARTMENT OF TRANSPORTATION

STATE PROJECT
RIGHT-OF-WAY PLANS OF WASHINGTON
INTERCHANGE AT RP 13

*SP-15-1(20)13
WASHINGTON COUNTY
PROJECT LENGTH - 1.27 MILES
R.P. 12.73 TO R.P. 14.00

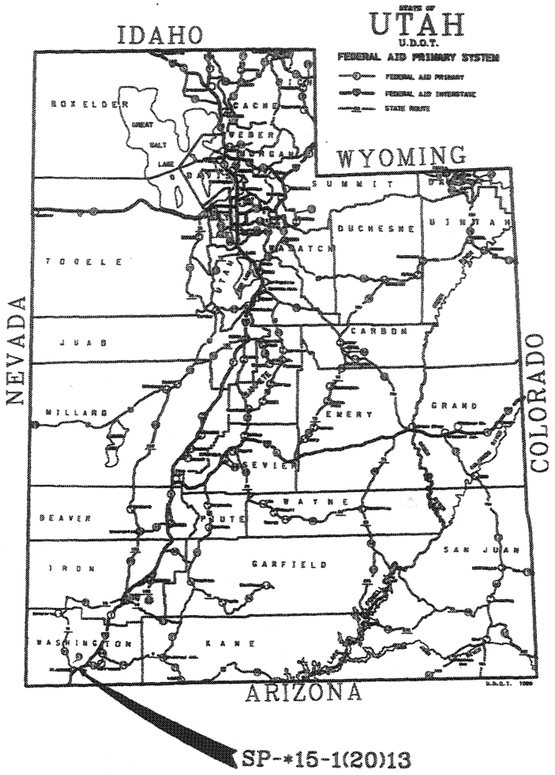

T.42 S. R. 15 W.
SEC. 11 & 12
S.L.B. & M.

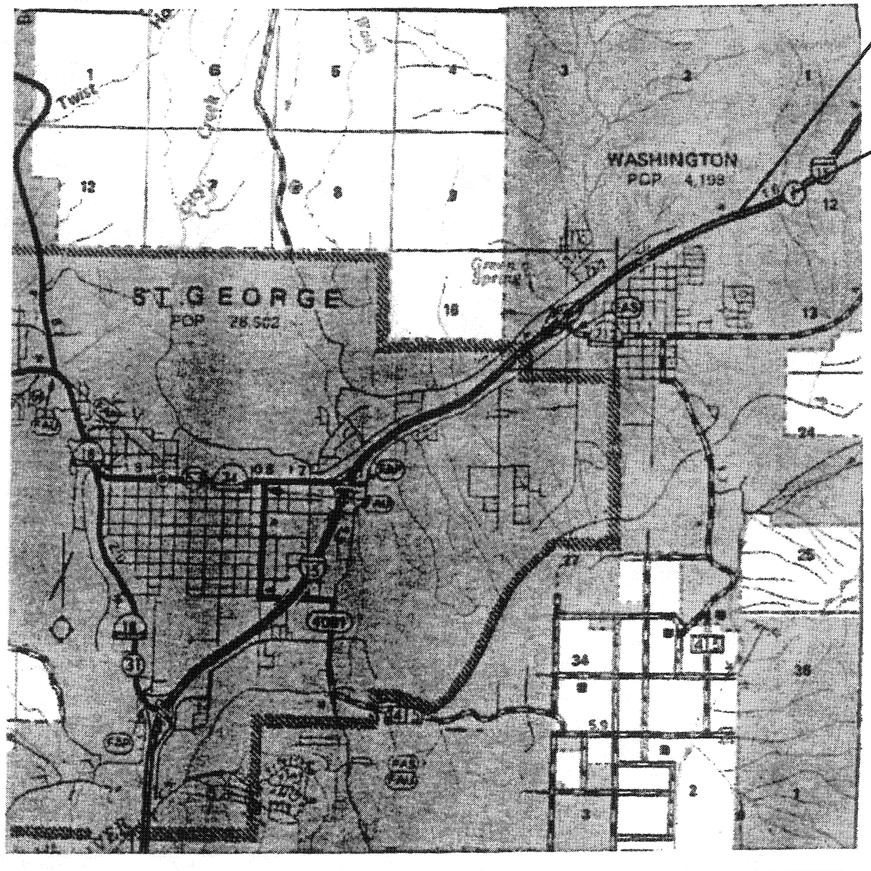

STA. 287+00.00
BEG. PROJECT
#SP-15-1(20)13
R.P. 12.78

STA. 351+80.54
END PROJECT
#SP-15-1(20)13
R.P. 14.00

UDOT
GOING THE EXTRA MILE

UTAH DEPARTMENT OF TRANSPORTATION

APPROVED FOR
USE BY UDOT _____ 2003

_____
REGION 4 DIRECTOR

DGN File: N:\Projects\7620.02\Sheet_Files\Right-of-Way\7620_row_title_RW-1.dgn
24-NOV-2003

203,267.4760
98,457.8120
NW CORNER
WASHINGTON CO.
1992 BC, LS 7753

N. 1°05'34" E.
2646.10'

W1/4 CORNER
WASHINGTON CO. BC
200,621.8610
98,407.3510

2644.94'

N. 1°03'30" E.

197,977.3717
98,358.4944
SW CORNER
NOT FOUND

N. 87°27'30" W.
2645.40'

2646.10'

N. 88°35'04" W.

NW1/4 NW1/4 SEC 12

SW1/4 NW1/4 SEC 12

NW1/4 SW1/4 SEC 12

SW1/4 SW1/4 SEC 12

SE1/4 SW1/4 SEC 12

SW1/4 SE1/4 SEC 12

SE1/4 SE1/4 SEC 12

NE1/4 SW1/4 SEC 12

SE1/4 NW1/4 SEC 12

NE1/4 NW1/4 SEC 12

NW1/4 SE1/4 SEC 12

NE1/4 SE1/4 SEC 12

SW1/4 NE1/4 SEC 12

NE1/4 NE1/4 SEC 12

SE1/4 NE1/4 SEC 12

SHEET RW-2

SHEET RW-3

SHEET RW-4

SHEET RW-5

SHEET RW-6

SHEET RW-7

SHEET RW-8

SHEET RW-9

1:2A

1:A

TORTOISE HABITAT CONSERVATION AREA

2661.16'

N. 1°05'28" E.

S. 1°05'28" W.
2696.92'

2650.59'

S. 88°35'04" E.

N. 88°44'55" W.
2647.82'

S. 1°01'55" W.
2668.77'

S. 1°02'46" W.
2666.37'

203,217.1750
101,103.3110
NW CORNER
WASHINGTON CO.
1992 BC, LS 7753

N. 88°54'39" W.
2645.98'

N1/4 CORNER
ORIGINAL STONE

203,159.3490
103,750.4970
NE CORNER
BLM BC 1978

200,491.0170
103,702.4270
E1/4 CORNER
BLM BC 1978

197,860.0590
101,001.2920
S1/4 CORNER
BLM BC 1973

N. 89°14'41" W.
2652.69'

197,825.0960
103,653.7500
SE CORNER
BLM BC 1973

T.42S.
S.L.B.&M.
R.15W.

UDOT-21 ▲
UDOT-22 ▲
SG-23 ▲
▲ UDOT-23
▲ AT-3
▲ UDOT-1
▲ AT-2
▲ MA-12

PARCEL NO.	OWNER	SQ FT	OWNERSHIP* SQ FT	REMAINING SQ FT LEFT	REMAINING SQ FT RIGHT
1:A	STATE OF UT: STATE TRUST LANDS	260.999	11,031.609		10,770.610
1:2A	STATE OF UT: STATE TRUST LANDS	517.425	10,176.986	9.659.561	

* NOTE: STATE TRUST LANDS OWNS SEVERAL THOUSAND ACRES IN A CONTIGUOUS BLOCK KNOWN AS THE "NORTH ST. GEORGE BLOCK". THE AREAS GIVEN ABOVE ARE ONLY THOSE WITHIN SEC 12.

NO.	DATE	REVISION BY	AMPS PARCELS AFFECTED	RECEIVED BY	REMARKS
1	11-00	JGT			REVISED PARCEL 1182A, FENCE, CUT/FILL LINES

REVISIONS

ORIGINAL SUBMISSION FOR AUTHORIZATION

DATE

UTAH DEPARTMENT OF TRANSPORTATION
REGION 4 — RICHFIELD, UTAH
RIGHT-OF-WAY DESIGN

DESIGN	JEM	7/03	CHECK NAJ
DRAWN	JEM	7/03	CHECK NAJ
QUANT.			CHECK

REVIEW 7/03 DATE
BY

APPROVAL RECOMMENDED — DATE — REGION RIGHT-OF-WAY ENGINEER
APPROVED FOR RIGHT OF WAY — DATE — PRECONSTRUCTION ENGINEER

WASHINGTON INTERCHANGE @ RP 13

TOTAL TRACT MAP

PROJECT NUMBER *SP-15-1(120)113

WASHINGTON COUNTY

SHEET NO. RW-1A

RIGHT-OF-WAY SUMMARY SHEET

RIGHT-OF-WAY MARKERS TO BE SET

#	PROJECT COORDINATES NORTHING	EASTING
RM-1	199,754.4279	100,142.2165
RM-2	200,549.5301	101,410.1527
RM-3	200,094.2607	101,175.6911
RM-4	199,662.8467	101,277.0750
RM-5	199,608.7200	101,084.5385
RM-6	199,985.3502	100,937.8145
RM-7	200,117.1474	99,507.0467
RM-8	200,341.4778	99,890.0934
RM-9	200,827.0758	100,347.1052
RM-10	200,955.9171	100,262.1663
RM-11	201,202.4998	99,855.8629
△RM-12	201,456.1483	99,882.0816
△RM-13	201,096.2709	100,475.0649
△RM-14	200,917.3365	100,593.0277
RM-15	201,397.0327	101,505.3213

PROJECT CONTROL

#	PROJECT COORDINATES NORTHING	EASTING	ELEVATION
MA-12	202,233.7200	102,583.2900	
SG-23	200,000.0000	100,000.0000	2,996.65
AT-1	203,535.5200	103,501.0500	3,166.15
AT-2	201,447.3800	101,931.5600	3,045.33
AT-3	200,350.7800	100,397.9400	3,010.67
UDOT-21	199,368.6700	98,732.6600	2,996.82
UDOT-22	199,824.0700	99,626.6300	3,009.69
UDOT-23	200,150.9300	100,529.0200	3,010.09
UDOT-24	200,691.4400	101,347.5800	3,019.33

I, T. Edward Madden, do hereby certify that I am a Liscensed Professional Land Surveyor as prescribed by the laws of the State of Utah, am employed by the Utah Department of Transportation, and that a survey was made by me (or under my direction), and that I have examined the field notes, maps, drawings, and deeds pertaining thereto, and have caused to be prepared the attached Right-of-Way maps RW-1 through RW-8 and deeds for Project *SP-15-1(20)13.

NO.	DATE					REMARKS
△	11-03	J01			RND/NAJ	REVISED PARCEL 112A, FENCE, CUT/FILL LINES
		DESIGN REV. BY	MAPS CORR. BY	PARCELS AFFECTED	REQUEST BY	

ORIGINAL SUBMISSION FOR AUTHORIZATION

DATE

REVISIONS

UTAH DEPARTMENT OF TRANSPORTATION
REGION 4 — RICHFIELD, UTAH
RIGHT-OF-WAY DESIGN

DESIGN TEM 7/03 CHECK NAJ 7/03
DRAWN TEM 7/03 CHECK NAJ 7/03
QUANT. CHECK

REVIEW DATE BY

APPROVAL RECOMM. DATE REGION RIGHT-OF-WAY ENGINEER
APPROVED FOR USE BY UDOT DATE PRECONSTRUCTION ENGINEER

WASHINGTON INTERCHANGE @ RP 13
RIGHT-OF-WAY SUMMARY SHEET △

PROJECT NUMBER *SP-15-1(20)13

WASHINGTON COUNTY

SHEET NO. RW-1B

STA 287+00.00 SB
BEGIN RIGHT OF WAY
#SP-15-1(20)13
R.P. 12.78

Exist. Trail Rd. R/W Line

N 193287.140
E 97788.045

Exist. Highway R/W & N/A Line
N. 70°15'21" E.

Exist. Highway R/W & N/A Line

NE1/4 SE1/4
SEC. 11

FOUND
W1/4 CORNER SEC 12
BRASS PLUG IN CONC

Exist R/W Marker @
Sta 294+98.86 SB Lanes
200.62' Lt

S. 1°03'30" W. 1119.75'

CUT

CUT

CUT

CUT

CUT

SB I-15

STA 293+36.02

S70°15'21"W

FILL

T. 42 S.
S.L.B. & M.
R. 15 W.

STA 287+42.22 NB
BEGIN RIGHT OF WAY
#SP-15-1(20)13
R.P. 12.78

N 193051.058
E 97872.888

290+00

40 Acre Line

SE1/4 SE1/4
SEC. 11

S. 1°03'30" W. 247.08'

295+00

NW1/4 SW1/4
SEC. 12

300+00

FILL

NB I-15

N. 68°08'43" E.

Exist. Highway R/W & N/A Line

STA. 292+90.87

N. 68°08'43" E.

Exist. Trail Rd. R/W Line

N. 68°08'43" E.

Exist. Highway R/W & N/A Line

Sta. 296+24.88
85.00' Rt.

Sta. 297+89.88
200.00' Rt.

N. 68°08'43" E.

Exist. Highway R/W & N/A Line

40 Acre Line

SECTION LINE

S. 1°03'30" W. 1278.14 Calc'd

NOT FOUND
SW CORNER SEC 12
CALC'D LOCATION

SW1/4 SW1/4
SEC. 12

Exist R/W Marker @
Sta 290+00.00 NB Lanes
114.89' Rt

290+00

Exist R/W Marker @
Sta 294+65.44 NB Lanes
115.75' Rt

295+00

Exist R/W Marker @
Sta 300+00.70 NB Lanes
198.60' Rt

300+00

100 50 0 100 200 ft
GRAPHIC SCALE

UTAH DEPARTMENT OF TRANSPORTATION
REGION 4 — RICHFIELD, UTAH
RIGHT-OF-WAY DESIGN

NO.	DATE	REVISIONS	DESIGN	MAS	PARCELS REVIEWED BY	REMARKS
		ORIGINAL SUBMISSION FOR AUTHORIZATION	DRAWN	CHECK	DATE	
	DATE		QUANT.	CHECK	DATE	

REVIEW

DESIGN ITEM	7/03	CHECK	NAJ	7/03
DRAWN ITEM	7/03	CHECK	NAJ	7/03
QUANT.		CHECK		

REGIONAL ENGINEER — DATE — REGION RIGHT-OF-WAY ENGINEER — DATE
APPROVED FOR USE BY UDOT — DATE — PRECONSTRUCTION ENGINEER — DATE

WASHINGTON INTERCHANGE @ RP 13
RIGHT-OF-WAY PLAN SHEET

PROJECT NUMBER #SP-15-1(20)13

WASHINGTON COUNTY

SHEET NO. RW-2

PARCEL NO.	OWNER	SQ FT	OWNERSHIP* SQ FT	REMAINING SQ FT LEFT	REMAINING SQ FT RIGHT
1:A	STATE OF UT: STATE TRUST LANDS	260.999	11.031.609	9.624.650	10.770.610
1:2A	STATE OF UT: STATE TRUST LANDS	552.336	10.176.986		

* NOTE: STATE TRUST LANDS OWNS SEVERAL THOUSAND ACRES IN A CONTIGUOUS BLOCK KNOWN AS THE "NORTH ST. GEORGE BLOCK". THE AREAS GIVEN ABOVE ARE ONLY THOSE WITHIN SEC 12.

SB I-15 Curve # 1
Delta 29°27'19" Left
R 5729.60
T 1506.08
L 2945.53
P.I. 320+55.62
N 200421.036
E 100946.383

③
CURVE DATA
R= 5529.60'
Δ=0°30'17"
L=48.705'
CHD=48.705'
CB=N. 70°00'12" E.

STA 305+49.53 PC SB LANES 200' LT
STA 306+00 SB LANES 200' LT = STA 14+34.08 "A" LINE 140.87' LT

"A" LINE Curve # 1
Delta 25°20'55.83" Left
R 2510.000
T 564.476
L 1110.476
P.I. 15+64.48
N 200004.2616
E 99714.1539

④
CURVE DATA
R=5529.60'
Δ=24°46'52"
L=2391.614'
CHD=2373.017'
CB=N. 57°21'38" E.

STA 19+00.00 LINE "A" 105.00' LT

1/4 SECTION LINE
666.83'
1:2A
N. 43°15'47" E.
HIGHWAY R/W & N/A LINE
FILL
PT 21+10.
20+00
N44°54'25"E
N. 59°38'41" E. 443.90'
HIGHWAY R/W & N/A LINE
Exist. Highway R/W & N/A Line
N. 70°15'21" E.
Exist. Highway R/W & L/A Line
FILL
CUT
15+00
BEGIN "A" LINE STA 10+00.00 SB I-15 N 199813.570 E 99182.464
PC 10+00.00
CUT
CUT
CUT
PC 305+49.53
"A" LINE
FILL
FILL
Exist R/W Marker @ Sta 313+01.07 SB Lanes 199.46' Lt
S70°15'21"W
SB I-15
300+00
NW1/4 SW1/4 SEC 12
POB 10+00.00
305+00
CP-15-22
N 199824.060
E 99626.750
Z 3009.68
PC 308+01.34
310+00
CP-30-23
N 200000.000
E 100000.000
Z 3096.65
NE1/4 SW1/4 SEC 12
FILL
N68°8'43"E
NB I-15
"B" LINE
FILL
CUT
CUT
CUT
FILL
40-ACRE LINE
10+00
15+00
N75°50'35"E
FILL
Exist. Highway R/W & N/A Line
N. 68°08'43" E.
BEGIN "B" LINE STA 10+00.00 I-15 NB STA 304+98.898 RT 12.00 N 199693.106 E 99505.927
PC 16+11.
PT 17+40.46
Exist. Highway R/W & N/A Line
FILL
N. 73°48'53" W. 828.43'
HIGHWAY R/W & N/A LINE
1:A

①
CURVE DATA
R=5928.65'
Δ=2°59'12"
L=309.086'
CHD=309.051'
CB=N. 66°39'07" E.

②
CURVE DATA
R=5929.65'
Δ=14°29'59"
L=1500.614'
CHD=1496.613'
CB=N. 57°54'32" E.

T. 42 S. R. 15 W. S.L.B. & M.

Exist R/W Marker @ Sta 304+89.27 NB Lanes 198.31' Rt

NB I-15 Curve # 1
Delta 29°05'20" Left
R 5729.65
T 1486.53
L 2908.92
P.I. 322+67.86
N 200370.937
E 101163.712

STA 308+01.34 PC NB LANES 200' RT

Exist R/W Marker @ Sta 308+04.33 NB Lanes 198.59' Rt

"B" LINE Curve #
Delta 3°41'51.56" Right
R 2000.000
T 64.559
L 129.073
P.I. 16+75.94
N 199900.3521
E 100149.3134

STA 311+00.00 NB LANES 200' RT = STA 16+25.40 "B" LINE 136.67' RT

100 50 0 100 200 ft
GRAPHIC SCALE

NO.	DATE	REMARKS
		ORIGINAL SUBMISSION FOR AUTHORIZATION
	DATE	REVISIONS

UTAH DEPARTMENT OF TRANSPORTATION
REGION 4 — RICHFIELD, UTAH
RIGHT-OF-WAY DESIGN

DESIGN	TEM 7/03	CHECK NAJ 7/03	REVIEW
DRAWN	TEM 7/03	CHECK NAJ 7/03	DATE
QUANT.		CHECK	BY

APPROVAL RECOMMENDED: REGION RIGHT-OF-WAY ENGINEER DATE
APPROVED FOR USE BY UDOT: PRECONSTRUCTION ENGINEER DATE

WASHINGTON INTERCHANGE @ RP 13
RIGHT-OF-WAY PLAN SHEET

PROJECT NUMBER #SP-15-1(20)113

WASHINGTON COUNTY

SHEET NO. RW-3

"A" LINE Curve # 2
Delta 11°41'53" Right
R 700.00
T 71.71
L 142.92
P.I. 24+76.11
N 200663.018
E 100370.775

"A" LINE Curve # 3
Delta 10°13'06" Right
R 700.00
T 62.59
L 124.84
P.I. 29+26.21
N 200911.027
E 100746.973

Exist R/W Marker @ Sta 313+01.07 SB Lanes 199.46' Lt

Exist R/W Marker @ Sta 318+62.83 SB Lanes 199.61' Lt

Exist R/W Marker @ Sta 322+22.86 SB Lanes 197.58' Lt

Exist R/W Marker @ Sta 325+36.26 SB Lanes 198.37' Lt

④ CURVE DATA
R=5529.60'
Δ=24°46'52"
L=2391.614'
CHD=2373.017'
CB=N. 57°21'38" E.

③ CURVE DATA
R=555.00'
Δ=50°42'13"
L=491.144'
CHD=475.274'
CB=N. 58°44'48" W.

⑥ CURVE DATA
R=810.00'
Δ=50°42'13"
L=716.805'
CHD=693.643'
CB=S. 58°44'48" E.

TORTOISE HABITAT CONSERVATION AREA

TORTOISE HABITAT BOUNDARY

FOUND W1/4 CORNER SEC 12

FOUND N1/4 CORNER SEC. 12

S. 88°35'04" E. 2401.80'

N. 43°15'47" E. 666.83'

HIGHWAY R/W & N/A LINE

N. 33°23'42" W. 154.32'

STA 25+46.36 "A" LINE
150.00 LT
STA 23+92.88 I-15 ACCESS RD
145.00 LT

S. 33°23'42" E. 214.32'

ENVIRONMENTAL LINE

STA 28+01.15 "A" LINE
90.00' LT
STA 23+32.89 I-15 ACCESS RD
110.00 RT

1:2A

N. 62°15'50" E. 1030.72'

S. 1°05'28" W. 2477.35'

PT 21+10.98

N44°54'25"E

"A" LINE

N56°36'18"E

N66°49'24"E

PC 24+04.41

PI 25+47.32

PC 28+63.62

PT 29+88.46

PC 33+92.36

EXP

FILL

CUT

I-15 ACCESS ROAD

Existing Hwy R/W & N/A Line

SE1/4 NW1/4 SEC 12

SW1/4 NE1/4 SEC 12

NE1/4 SW1/4 SEC 12

NW1/4 SE1/4 SEC 12

SB I-15

STA. 319+88.64

N. 88°35'04" W. 244.30'

N. 1°05'28" E. 183.81'

STA. 322+93.58

1/4 SECTION LINE

1/4 SECTION LINE

315+00

320+00

325+00

T. 42 S.
S.L.B. & M.
R. 15 W.

100 50 0 100 200 ft
GRAPHIC SCALE

SB I-15 Curve #1
Delta 29°27'19" Left
R 5729.60
T 1506.08
L 2945.53
P.I. 320+55.62
N 200421.036
E 100946.383

NO.	DATE	REMARKS
1	11-03	JGI
		ROW/ALIGNMENT REVISE PARCEL 118A, FENCE, CUT/FILL LINES
		ORIGINAL SUBMISSION FOR AUTHORIZATION

REVISIONS

UTAH DEPARTMENT OF TRANSPORTATION
REGION 4 — RICHFIELD, UTAH
RIGHT-OF-WAY DESIGN

DESIGN TEM 7/03 CHECK MAJ 7/03 REVIEW
DRAWN TEM 7/03 CHECK MAJ 7/03 DATE BY
QUANT. CHECK

APPROVAL RECOMM. DATE REGION RIGHT-OF-WAY ENGINEER
APPROVED FOR USE BY UDOT DATE RECONSTRUCTION ENGINEER

WASHINGTON INTERCHANGE @ RP 13
RIGHT-OF-WAY PLAN SHEET

PROJECT NUMBER #SP-15-1(20)13

WASHINGTON COUNTY

SHEET NO. RW-4

FOUND
W1/4 CORNER
SEC 12

NB I-15 Curve # 1
Delta 29°05'20" Left
R 5729.65
T 1486.53
L 2908.92
P.I. 322+87.86
N 200370.937
E 101163.712

FOUND
N1/4 CORNER
SEC 12

N. 88°35'04" W. 2646.10'
1/4 SECTION LINE

N. 1°05'28" E. 2661.16'

SE1/4 NW1/4
SEC 12

NE1/4 SW1/4
SEC 12

SW1/4 NE1/4
SEC 12

T. 42 S.
S.L.B. & M.
R. 15 W.

315+00
320+00
325+00

NB I-15

I-15 ACCESS ROAD

FILL
CUT

STA. 322+56.89

32.23'
41.20'

STA. 323+09.13

PC 22+97.89

N75°50'35"E

PT 23+32.62

PC 26+91.74

PC 32+59.34

N34°42'5"E

PC 32+15.09

"B" LINE

Exist Highway R/W & N/A Line

N56°36'18"E

⑤
CURVE DATA
R=5929.65'
Δ=11°36'09"
L=1200.754'
CHD=1198.703'
CB=N. 44°51'28" E.

S. 73°48'53" W. 828.43'

HIGHWAY R/W & N/A LINE

20+00
15+00
25+00
30+00

1/4 SECTION LINE

Sta 24+08.94 "B" Line
185.00' RT =
Sta 13+62.76 Access Rd
115.00 LT

Sta 325+50.00 NB Lanes
200.00 RT =
Sta 30+99.54 "B" Line
82.75' RT

S. 88°35'04" E. 2609.29'

FOUND
E1/4 CORNER
SEC 12

②
CURVE DATA
R=5929.65'
Δ=14°29'59"
L=1500.614'
CHD=1496.613'
CB=N. 57°54'32" E.

S. 27°14'54" W. 512.10'

Sta 26+67.48 "B" Line
225.00 RT =
Sta 13+33.79 Access Rd.
145.00 RT

Exist R/W Marker @
Sta 324+91.93 NB Lanes
199.32' Rt

Exist R/W Marker @
Sta 314+48.53 NB Lanes
194.56' Rt

N. 21°17'04" W. 404.20'

S. 1°05'28" W.
2664.69'

Exist R/W Marker @
Sta 319+91.98 NB Lanes
199.65' Rt

S. 13°13'29" E.
443.17'

1:A

NW1/4 SE1/4
SEC 12

"B" LINE Curve # 2
Delta 19°14'17" Left
R 700.00
T 118.63
L 235.04
P.I. 22+16.22
N 200032.504
E 100673.226

FOUND
S1/4 CORNER
SEC 12

"B" LINE Curve # 3
Delta 21°54'13" Left
R 700.00
T 135.45
L 267.60
P.I. 28+27.19
N 200370.016
E 101185.189

100 50 0 100 200 ft
GRAPHIC SCALE

UTAH DEPARTMENT OF TRANSPORTATION
REGION 4 — RICHFIELD, UTAH
RIGHT-OF-WAY DESIGN

DESIGN ITEM	7/03	CHECK NAJ	7/03
DRAWN ITEM	7/03	CHECK NAJ	7/03
QUANT.		CHECK	

REVIEW
DATE
BY

NO.	DATE	REMARKS
		ORIGINAL SUBMISSION FOR AUTHORIZATION

REVISIONS

REGIONAL REVIEW — DATE — REGION RIGHT-OF-WAY ENGINEER

APPROVED BY UDOT — DATE — PRECONSTRUCTION ENGINEER

WASHINGTON INTERCHANGE @ RP 13
RIGHT-OF-WAY PLAN SHEET

PROJECT NUMBER #SP-15-1120113

WASHINGTON COUNTY

SHEET NO. RW-5

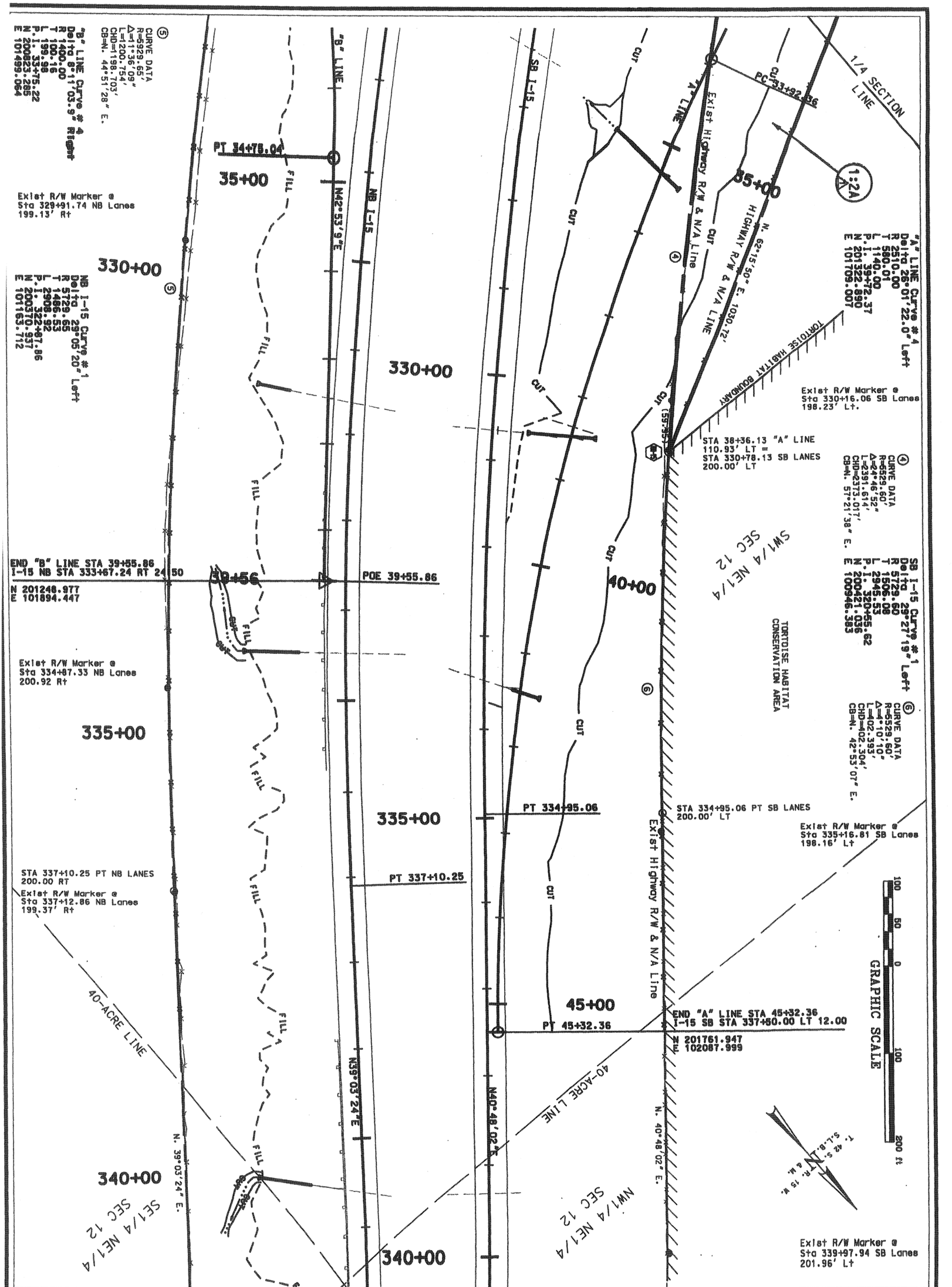

SHEET NO. RW-6	WASHINGTON COUNTY	WASHINGTON INTERCHANGE @ RP 13	UTAH DEPARTMENT OF TRANSPORTATION						11-03	JGI			RMD/NAJ	REVISE PARCEL 1:2A, FENCE, CUT/FILL LINES
		RIGHT-OF-WAY PLAN SHEET	REGION 4 — RICHFIELD, UTAH											
			RIGHT-OF-WAY DESIGN											
			APPROVAL RECOM. DATE REGION RIGHT-OF-WAY ENGINEER	DESIGN TEM 7/03	CHECK NAJ 7/03	REVIEW								
		PROJECT NUMBER #SP-15-1(20)13	APPROVED FOR USE BY UDOT DATE PRECONSTRUCTION ENGINEER	DRAWN TEM 7/03	CHECK NAJ 7/03	DATE			NO.	DATE	DESIGN REV. BY	MAPS CORR. BY	PARCELS AFFECTED	REQUEST BY	REMARKS
				QUANT.	CHECK	BY									ORIGINAL SUBMISSION FOR AUTHORIZATION
									DATE						REVISIONS

Exist R/W Marker @
Sta 339+79.94 SB Lanes
201.96' Lt

N. 40°48'02" E.

Exist Highway R/W & N/A Line

NW1/4 NE1/4
SEC 12

40-ACRE LINE

T. 42 S.
S.L.B. & M.

R. 15 W.

STA 350+45.24 SB
END PROJECT
#SP-15-1(20)13
R.P. 14.00

STA 351+80.54 NB
END PROJECT
#SP-15-1(20)13
R.P. 14.00

N 202134.588
E 1023403.432

N 202366.974
E 1023026.760

N40°48'2"E

SB I-15

340+00

345+00

350+00

N39°3'24"E

NB I-15

FILL

FILL

FILL

FILL

FILL

FILL

FILL

N. 39°03'24" E.

Exist Highway R/W & N/A Line

345+00

350+00

351+81

SE1/4 NE1/4
SEC 12

40-ACRE LINE

NE1/4 NE1/4
SEC 12

100 50 0 100 200 ft

GRAPHIC SCALE

UTAH DEPARTMENT OF TRANSPORTATION
REGION 4 — RICHFIELD, UTAH
RIGHT-OF-WAY DESIGN

REVIEW
DESIGN ITEM 1/03 CHECK NAA 1/03
DRAWN ITEM 1/03 CHECK NAA 1/03
QUANT. CHECK

NO. DATE REMARKS
1 DATE BY ORIGINAL SUBMISSION FOR AUTHORIZATION
DATE

REVISIONS

ORIGINAL RECOMMENDED BY REGION RIGHT-OF-WAY ENGINEER DATE
APPROVED FOR USE BY UDOT PRECONSTRUCTION ENGINEER DATE

WASHINGTON INTERCHANGE @ RP 13
RIGHT-OF-WAY PLAN SHEET

PROJECT NUMBER #SP-15-1(20)13

WASHINGTON COUNTY

SHEET NO. RW-7

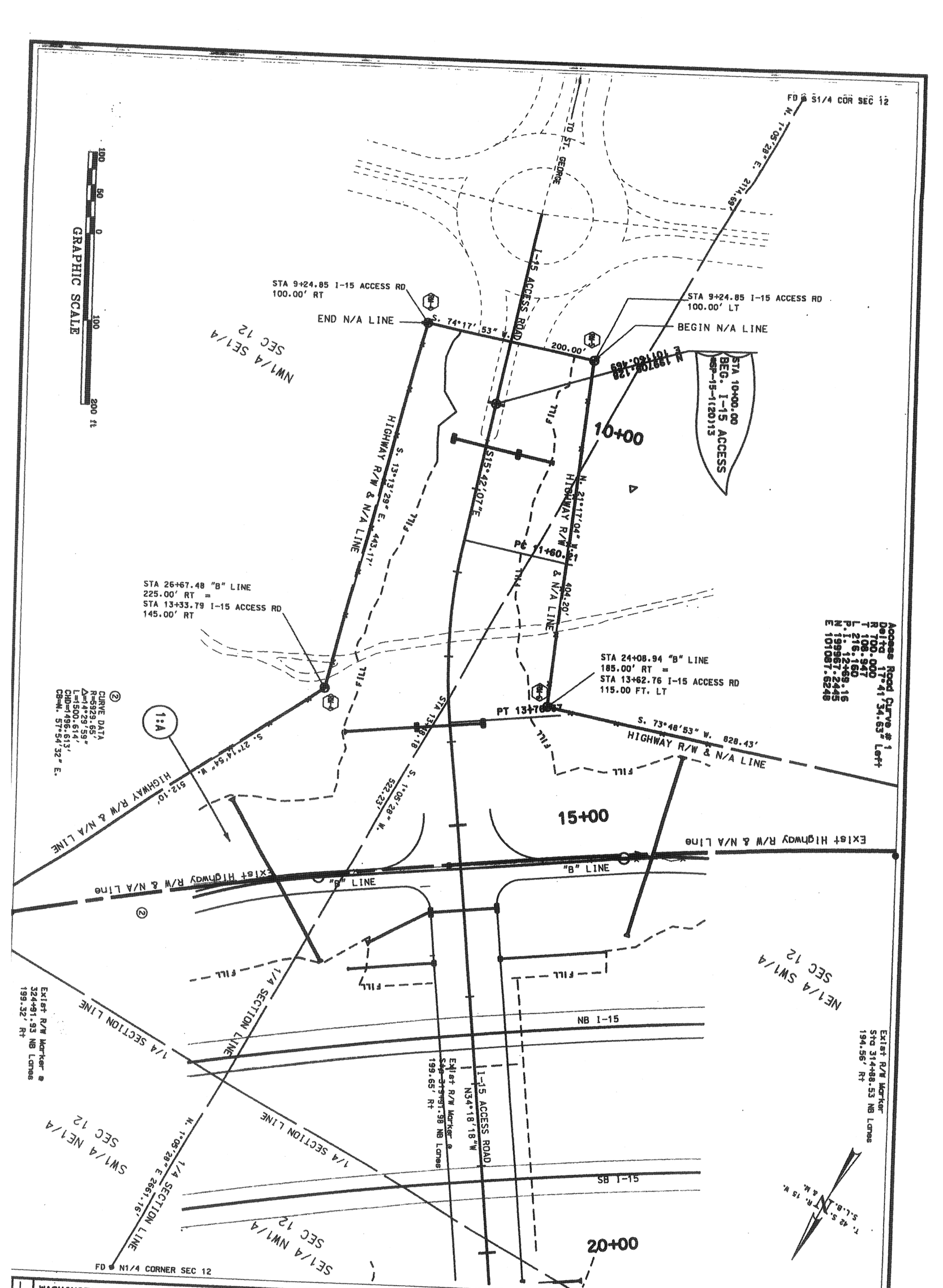

WASHINGTON COUNTY

WASHINGTON INTERCHANGE @ RP 13

RIGHT-OF-WAY PLAN SHEET

PROJECT NUMBER #SP-15-1(20)13

UTAH DEPARTMENT OF TRANSPORTATION

REGION 4 — RICHFIELD, UTAH

RIGHT-OF-WAY DESIGN

APPROVAL RECOMMENDED: DATE REGION RIGHT-OF-WAY ENGINEER

APPROVED FOR USE BY UDOT: DATE PRECONSTRUCTION ENGINEER

DESIGN TEM 7/03 | CHECK NAJ 7/03 | REVIEW

DRAWN TEM 7/03 | CHECK NAJ 7/03 | DATE

QUANT. | CHECK | BY

NO.	DATE	DESIGN / MAPS / PARCELS / REQUEST BY	REMARKS
		ORIGINAL SUBMISSION FOR AUTHORIZATION	
	DATE	REVISIONS	

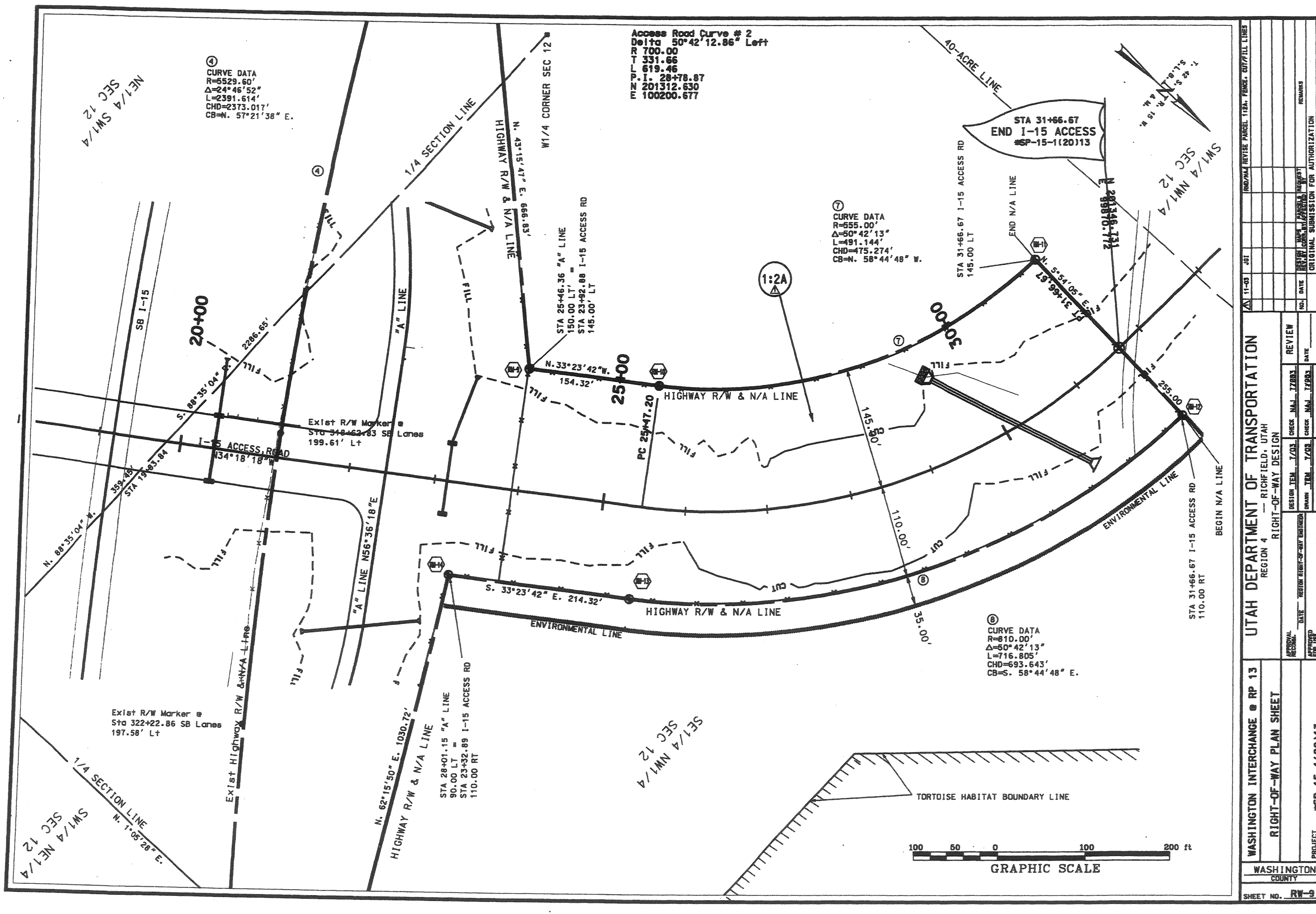

Access Road Curve # 2
Delta 50°42'12.86" Left
R 700.00
T 331.66
L 619.46
P.I. 28+78.87
N 201312.630
E 100200.677
④ CURVE DATA
R=5529.60'
Δ=24°46'52"
L=2391.614'
CHD=2373.017'
CB=N. 57°21'38" E.
NE1/4 SW1/4 SEC 12
1/4 SECTION LINE
W1/4 CORNER SEC 12
N. 43°15'47" E. 666.83'
HIGHWAY R/W & N/A LINE
40-ACRE LINE
STA 31+66.67
END I-15 ACCESS
#SP-15-1(20)13
T. 42 S., R. 15 W., S.L.B. & M.
SW1/4 NW1/4 SEC 12
STA 31+66.67 I-15 ACCESS RD
145.00 LT
END N/A LINE
⑦ CURVE DATA
R=555.00'
Δ=50°42'13"
L=491.144'
CHD=475.274'
CB=N. 58°44'48" W.
1:2A
SB I-15
20+00
25+00
30+00
2286.65'
S. 88°35'04" E.
STA 25+46.36 "A" LINE
150.00 LT' =
STA 23+92.88 I-15 ACCESS RD
145.00' LT
N.33°23'42"W.
154.32'
HIGHWAY R/W & N/A LINE
PC 25+47.20
145.50'
N. 5°54'05" E.
255.00
Exist R/W Marker @
Sta 318+62.83 SB Lanes
199.61' Lt
I-15 ACCESS ROAD
N34°18'18"W
359.45'
STA 19+83.84
N. 88°35'04" W.
"A" LINE
"A" LINE N56°36'18"E
FILL
CUT
110.00'
35.00'
S. 33°23'42" E. 214.32'
HIGHWAY R/W & N/A LINE
ENVIRONMENTAL LINE
ENVIRONMENTAL LINE
STA 31+66.67 I-15 ACCESS RD
110.00 RT
BEGIN N/A LINE
⑧ CURVE DATA
R=810.00'
Δ=50°42'13"
L=716.805'
CHD=693.643'
CB=S. 58°44'48" E.
STA 28+01.15 "A" LINE
90.00 LT =
STA 23+32.89 I-15 ACCESS RD
110.00 RT
N. 62°15'50" E. 1030.72'
HIGHWAY R/W & N/A LINE
Exist Highway R/W & N/A Line
Exist R/W Marker @
Sta 322+22.86 SB Lanes
197.58' Lt
1/4 SECTION LINE
N. 1°05'28" E.
SW1/4 NE1/4 SEC 12
SE1/4 NW1/4 SEC 12
TORTOISE HABITAT BOUNDARY LINE
100 50 0 100 200 ft
GRAPHIC SCALE
UTAH DEPARTMENT OF TRANSPORTATION
REGION 4 — RICHFIELD, UTAH
RIGHT-OF-WAY DESIGN
WASHINGTON INTERCHANGE @ RP 13
RIGHT-OF-WAY PLAN SHEET
PROJECT NUMBER #SP-15-1(20)13
REVIEW
DESIGN TEM 7/03
DRAWN TEM 7/03
CHECK NAJ 7/03
ORIGINAL SUBMISSION FOR AUTHORIZATION
REVISIONS
REMARKS
11-03 JDI RWD/NAJ REVISE PARCEL 113A, FENCE, CUT/FILL LINES
WASHINGTON COUNTY
SHEET NO. RW-9

I-15, M.P. 13 INTERCHANGE

PROJECT NO: *SP-15-1(20)13	BORING NO: BORING 7	DRILLER: WORWOOD
DATE BEGAN: 18 DEC 02	STATION: 35+85, I-15 S.B. OFF-RAMP	FIELD GEOLOGIST: SIZEMORE
DATE FINISHED: 19 DEC 02	OFFSET: LT 50 ft.	CONTRACTOR: UDOT
GROUND SURFACE ELEVATION: 3057	DRILLING METHOD: ROTARY BIT & HXB CORE	CHECKED BY: D.S.
GWL DEPTH: 18.3 ft.	DRILL EQUIP: CME-850	
GWL DATE/TIME: 19 DEC 02/13:50	PAGE 1 OF 1	

ELEV (ft)	DEPTH (ft)	SAMPLE TYPE AND NO.	SPT BLOWS/ 6 in./ REC/RQD	Recovery (in)	Lithology	DESCRIPTION	LL (%)	PI (%)	MC (%)	REMARKS
	0.0					SILTY SAND: red-brown				Casing to 5 ft
3055						SILTSTONE: to SANDY SILTSTONE, fractured to highly fractured, low strength, top portion of bedrock highly weathered, red-brown and grey				getting harder HXB Core Quit=1600 psi
3050	-5.0	Core 2-10	REC=97% RQD=68%	58		soft mudstone from 8.6-9 ft.				slow drilling from 9-10 ft.
3045	-10.0	Core 2-15	REC=100% RQD=70%	60		red-brown (grey)				Quit=2600 psi
3040	-15.0	Core 2-20	REC=100% RQD=87%	60		SILTSTONE: fractured to highly fractured, sandy in spots, some thin beds of claystone, low to moderately high strength, red-brown and grey				Quit=2800 psi
3035	-20.0	Core 2-25	REC=100% RQD=38%	60		numerous beds of claystone				Quit=3300 psi
	-25.0									T.D. 25 ft.

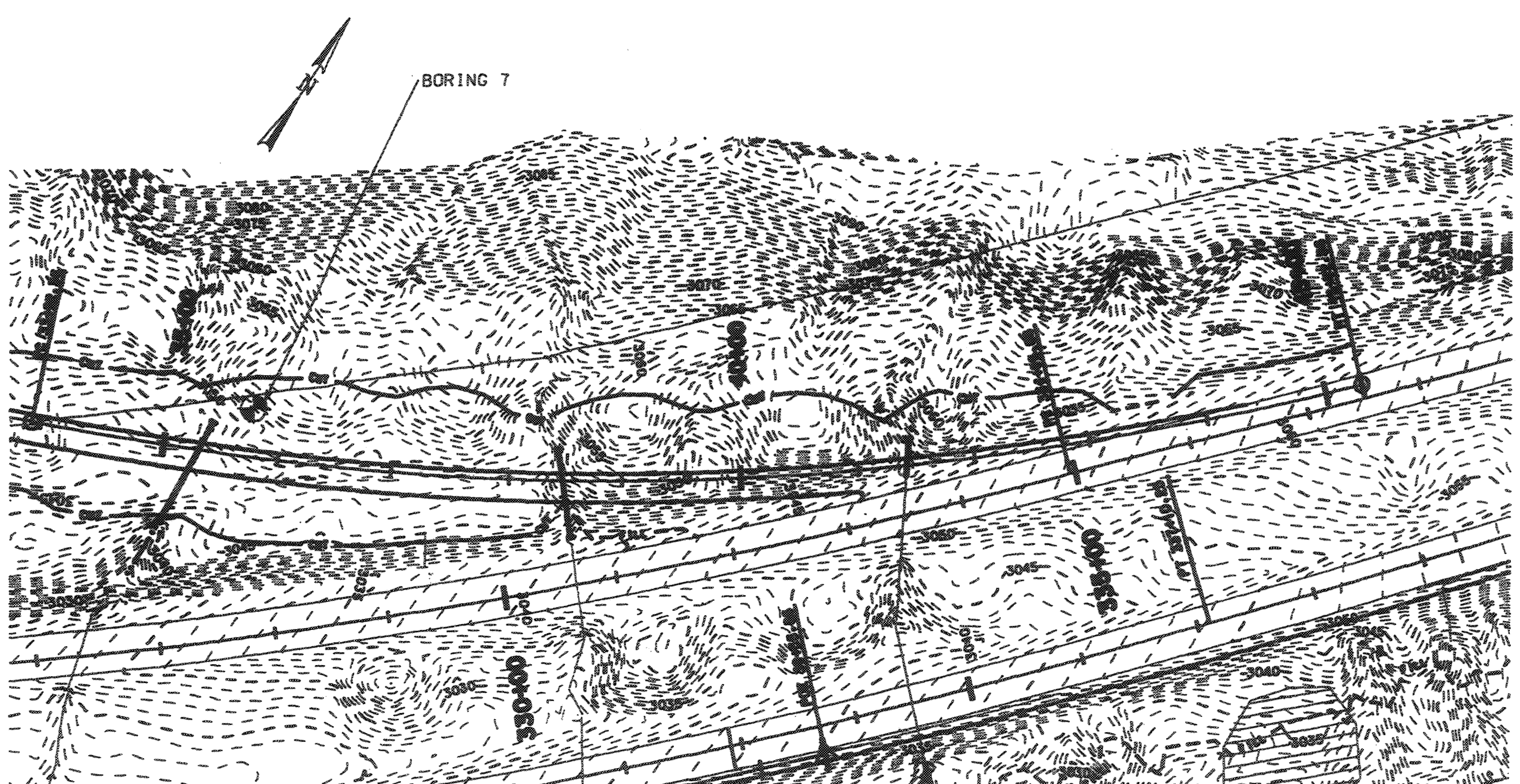

KEY TO BORING LOG

SYMBOLS

LL - LIQUID LIMIT
PI - PLASTICITY INDEX
NP - NON-PLASTIC
MC - NATURAL MOISTURE CONTENT (%)
N - SPT BLOW COUNT
REF - REFUSAL (> 50 BLOWS PER 6")
PEN - SPT SAMPLE
CS - CALIFORNIA SAMPLE
▽ - GROUNDWATER TABLE
A-2-6(1) - AASHTO CLASSIFICATION
CL - USCS CLASSIFICATION

RELATIVE DENSITY (NON-PLASTIC - SAND & SILT)

VERY LOOSE N<4; CS<10
LOOSE N 4-10; CS 10-26
MED DENSE N 10-30; CS 26-72
DENSE N 30-50; CS 72-104
VERY DENSE N>50; CS>104

CONSISTENCY (PLASTIC - SILT & CLAY)

VERY SOFT N<2; CS<2
SOFT N 2-4; CS 2-5
MEDIUM STIFF N 4-8; CS 5-11
STIFF N 8-15; CS 11-22
VERY STIFF N 15-30; CS 22-60
HARD N>30; CS>60

GENERAL NOTES

1. THE SUBSURFACE EXPLORATIONS SHOWN WERE CONDUCTED BETWEEN 14-NOV-02 AND 19-DEC-02 BY THE GEOTECHNICAL DIVISION OF UDOT.
2. THESE BORING LOGS REPRESENT A SYNOPSIS OF THE SOIL DEPOSITS ENCOUNTERED WITHIN EACH BORING AND ARE BASED ON SOUND GEOLOGICAL AND ENGINEERING JUDGMENT. BECAUSE SOIL IS A COMPLEX MEDIUM, THESE BORING LOGS MAY OR MAY NOT REPRESENT THE SOIL CONDITIONS AT THIS SITE. THIS SUBSURFACE INTERPRETATION IS PRESENTED IN GOOD FAITH AND IS NOT INTENDED AS SUBSTITUTE FOR PERSONAL INVESTIGATION AND JUDGEMENT OF THE CONTRACTOR.
3. THE WATER LEVELS AND CONDITIONS INDICATED ON THE BORING LOGS REPRESENT HOLE CONDITIONS ON THE DATE SHOWN. HOWEVER, IT SHOULD BE NOTED, THAT AT LOCATIONS AWAY FROM THE BORINGS OR AT ANOTHER TIME THE WATER LEVELS AND CONDITIONS MAY VARY SIGNIFICANTLY.
4. THE STRATIFICATION LINES REPRESENT THE APPROXIMATE BOUNDARIES BETWEEN SOIL TYPES AND THE TRANSITION MAY BE GRADUAL.
5. COBBLE - A ROCK FRAGMENT WITH AN AVERAGE DIMENSION BETWEEN 3 INCHES AND 12 INCHES
6. BOULDER - A ROCK FRAGMENT WITH AN AVERAGE DIMENSION OF 12 INCHES OR GREATER

NOTE: DRILL RIG USED - CME 850

GEOTECHNICAL ENGINEER

REVISIONS

NO.	DATE	BY	REMARKS

UTAH DEPARTMENT OF TRANSPORTATION
SALT LAKE CITY, UTAH
GEOTECHNICAL DIVISION

DESIGN DLS 04-03	CHECK JEB 06-03	APPROVAL RECOMM.	DATE CHIEF GEOTECHNICAL ENGR.
DRAWN LAH 04-03	CHECK DLS 06-03	APPROVED	DATE UDOT BRIDGE ENGR.
GEOLOGIST PJS 04-03	CHECK DLS 06-03		

WASHINGTON INTERCHANGE
AT MILEPOST 13 ACCESS ROAD

SOIL DATA SHEET

PROJECT NUMBER *SP-15-1(20)13

WASHINGTON COUNTY

SD-1

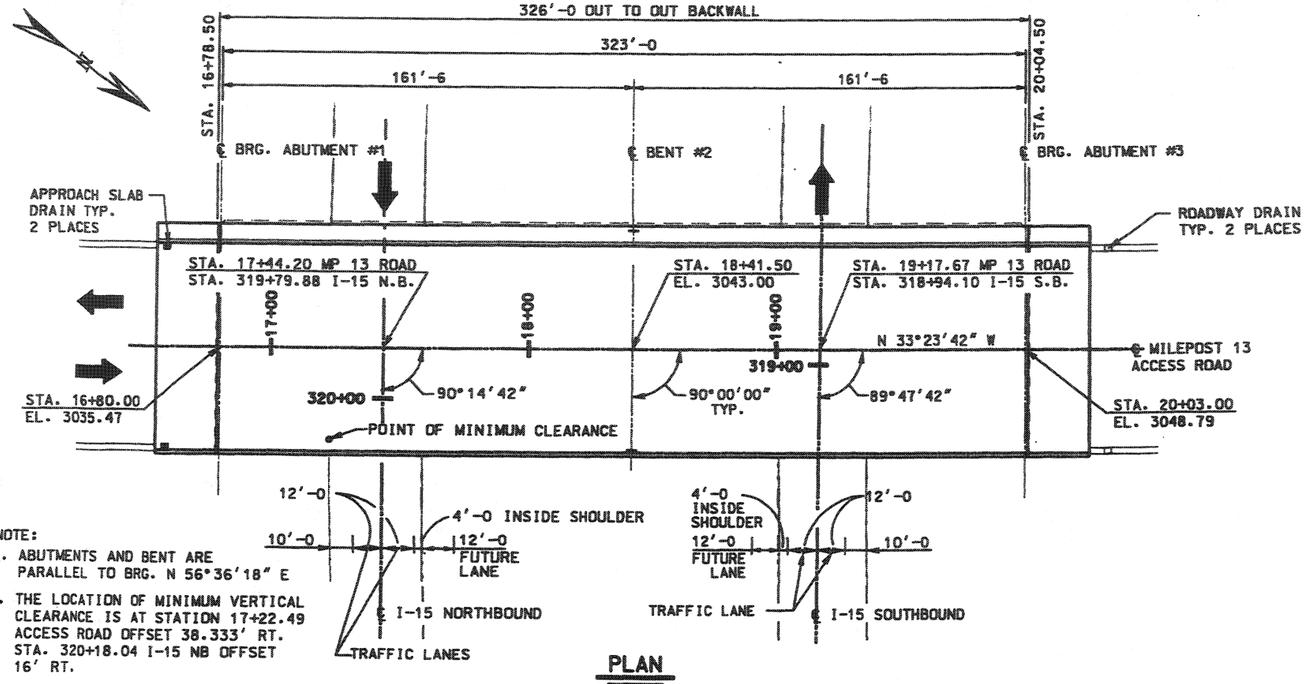

NOTE:

1. ABUTMENTS AND BENT ARE PARALLEL TO BRG. N 56°36'18" E
2. THE LOCATION OF MINIMUM VERTICAL CLEARANCE IS AT STATION 17+22.49 ACCESS ROAD OFFSET 38.333' RT. STA. 320+18.04 I-15 NB OFFSET 16' RT.

PLAN

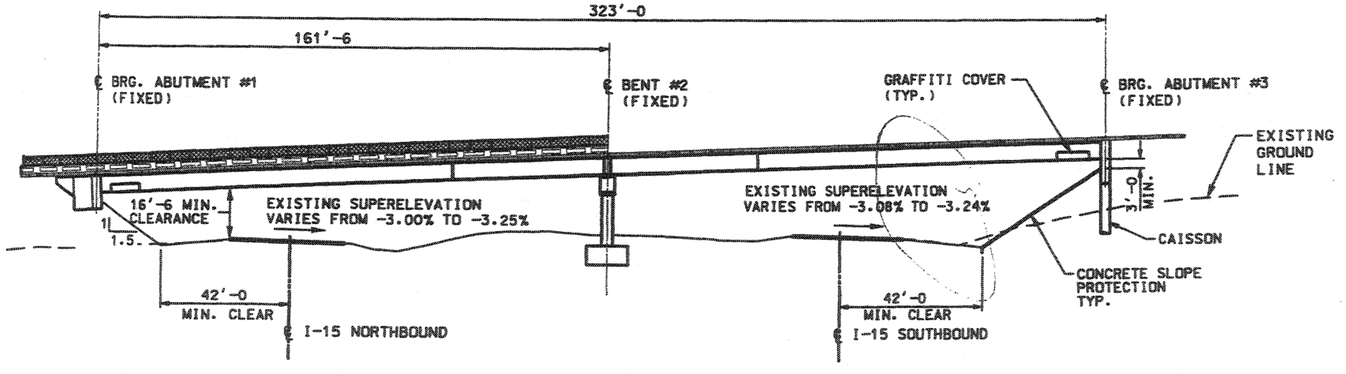

ELEVATION

(NORMAL TO MILEPOST 13 ACCESS ROAD)

INDEX OF SHEETS

1. SITUATION AND LAYOUT I
2. SITUATION AND LAYOUT II
3. SOIL DATA SHEET
4. SOIL DATA SHEET
5. SOIL DATA SHEET
6. FOUNDATION PLAN
7. CAISSON DETAILS
8. ABUTMENT PLAN
9. ABUTMENT SECTION AND ELEVATION
10. ABUTMENT DETAILS
11. BENT #2 DETAILS
12. BENT SECTIONS I
13. BENT SECTIONS II
14. FRAMING PLAN
15. GIRDER DETAILS I
16. SPLICE AND GIRDER DETAILS
17. DIAPHRAGM DETAILS
18. STEEL DETAILS
19. DECK PLAN AND SECTIONS
20. DECK SECTIONS I
21. DECK SECTIONS II
22. SCREED ELEVATIONS
23. PARAPET DETAILS
24. PARAPET END DETAILS
25. APPROACH SLAB DRAIN DETAILS
26. ELECTRICAL DETAILS
27. FENCE DETAILS
28. CONCRETE SLOPE PROTECTION
29. REINFORCING STEEL SCHEDULE I
30. REINFORCING STEEL SCHEDULE II

CURVE DATA

I-15 S.B.	I-15 N.B.
P.C. STA. 305+49.53	P.C. STA. 308+01.34
N = 199912.25	N = 199817.57
E = 99528.84	E = 99784.02
Δ = 29°27'19" L	Δ = 29°05'20" L
R = 5729.60'	R = 5729.65'
D = 1°00'00"	D = 1°00'00"
T = 1506.08'	T = 1486.53'
L = 2945.53'	L = 2908.92'
P.I. STA. 320+55.62	P.I. STA. 322+87.86
N = 200421.04	N = 200370.94
E = 100946.38	E = 101163.71

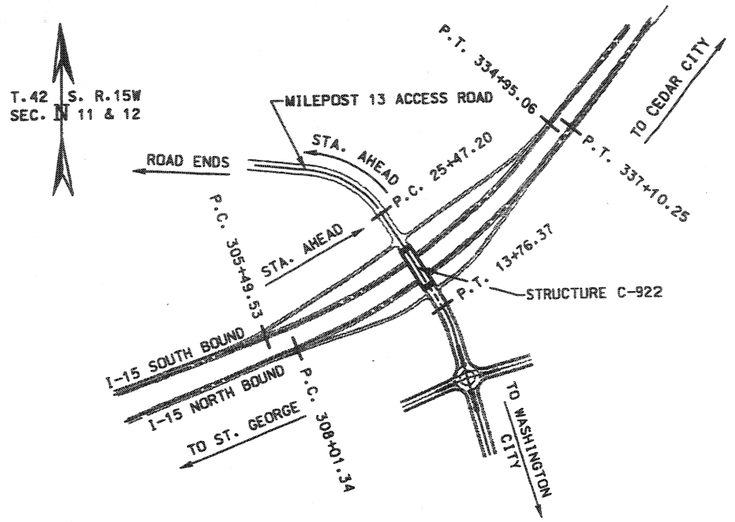

LOCATION PLAN

GENERAL NOTES

1. USE COATED DEFORMED-BILLET REINFORCING STEEL BARS CONFORMING TO AASHTO M 284 OR M 111 AND M 31 GRADE 60 RESPECTIVELY.
2. USE STRUCTURAL STEEL CONFORMING TO AASHTO M 270 GRADE 50 EXCEPT WHERE NOTED OTHERWISE.
3. CHAMFER ALL EXPOSED CONCRETE CORNERS 3/4 " EXCEPT WHERE NOTED OTHERWISE.
4. PROVIDE 2" CONCRETE COVER TO REINFORCING STEEL EXCEPT WHERE NOTED OTHERWISE.
5. USE CLASS AA(AE) CAST-IN-PLACE CONCRETE EXCEPT WHERE SPECIFIED OTHERWISE.

DESIGN DATA

HL-93 IN ACCORDANCE WITH CURRENT AASHTO LRFD BRIDGE DESIGN SPECIFICATIONS AND INTERIM SPECIFICATIONS.

CAST-IN-PLACE CONCRETE: CLASS AA (AE)	$f'c$ = 3650 PSI; fy (REINF.) = 60,000 PSI; n= 8
DECK AND CAISSON CONCRETE CLASS 3A (AE)	$f'c$ = 4000 PSI; fy (REINF.) = 60,000 PSI; n= 8
STRUCTURAL STEEL:	fy = 50,000 PSI
WEARING SURFACE:	1/2 " CONCRETE: FUTURE = 35 PSF
DESIGN SPEED:	MP13 ACCESS ROAD - 45 M.P.H.: I-15 - 75 M.P.H.
SEISMIC:	SEISMIC PERFORMANCE CATEGORY C: A = 0.3 g SOIL TYPE I

QUANTITIES

ITEM	ESTIM.	UNIT	AS CONST.
STRUCTURAL CONCRETE (EST. QTY. 1852 yds^3)	1	LUMP	
REINFORCING STEEL (COATED)	350,943	lbs.	
STRUCTURAL STEEL (EST. QTY. 970,000 lbs)	1	LUMP	
GRANULAR BACKFILL BORROW	269	yds.^{3}	
DRILLED CAISSONS 30 INCH	541	LIN. FT.	
CONCRETE SLOPE PROTECTION	179	sq. yds.	
ELECTRICAL WORK BRIDGES	1	LUMP	
6 ft CHAIN LINK FENCE, TYPE II	373	LIN. FT.	
STRUCTURAL BEDROCK EXCAVATION	505	yds.^{3}	

REVISIONS			
NO.	DATE	BY	REMARKS

UTAH DEPARTMENT OF TRANSPORTATION
SALT LAKE CITY, UTAH
STRUCTURES DIVISION

DESIGN DH 06/02 CHECK GG 06/02
DRAWN LM 06/02 CHECK DH 06/02
QUANT. VH 05/03 CHECK GG 05/03

APPROVAL RECOMM. ____ DATE ____ SENIOR BRIDGE ENGR.
APPROVED FOR USE BY DEPT. ____ DATE ____ DEPT BRIDGE ENGR.

WASHINGTON INTERCHANGE AT RP 13
MP 13 ACCESS ROAD OVER I-15
SITUATION AND LAYOUT I

PROJECT NUMBER * SP-15-1(20)13

WASHINGTON COUNTY

C-922 DRG. NO.

SHT. 1 OF 30

DGN File:\INProjects\2828.01\Sheet Files\Structures\2828_c922sht1.dgn
25-NOV-2003

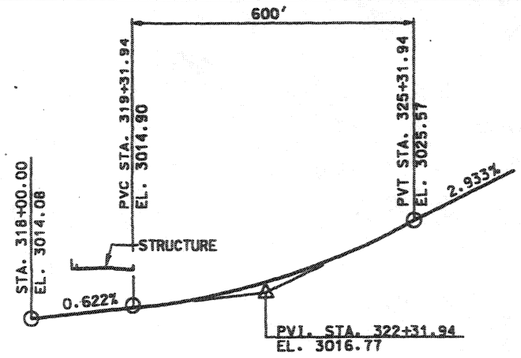

I-15 S.B. PROFILE

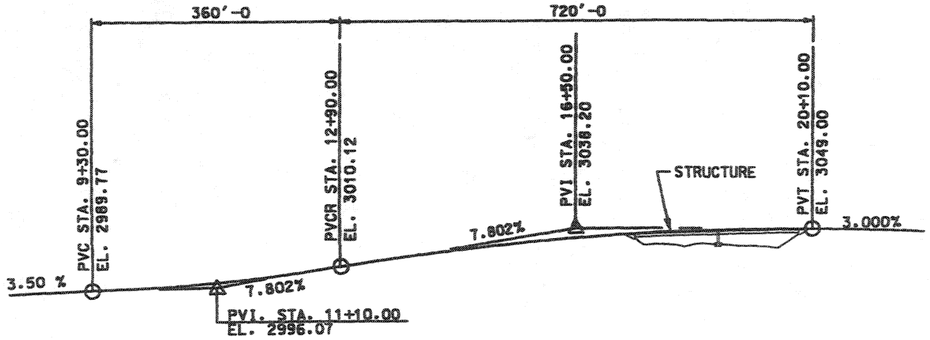

MP-13 ACCESS ROAD PROFILE

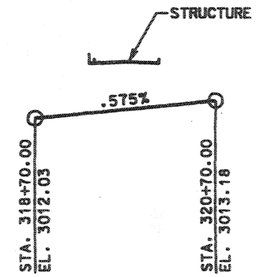

I-15 N.B. PROFILE

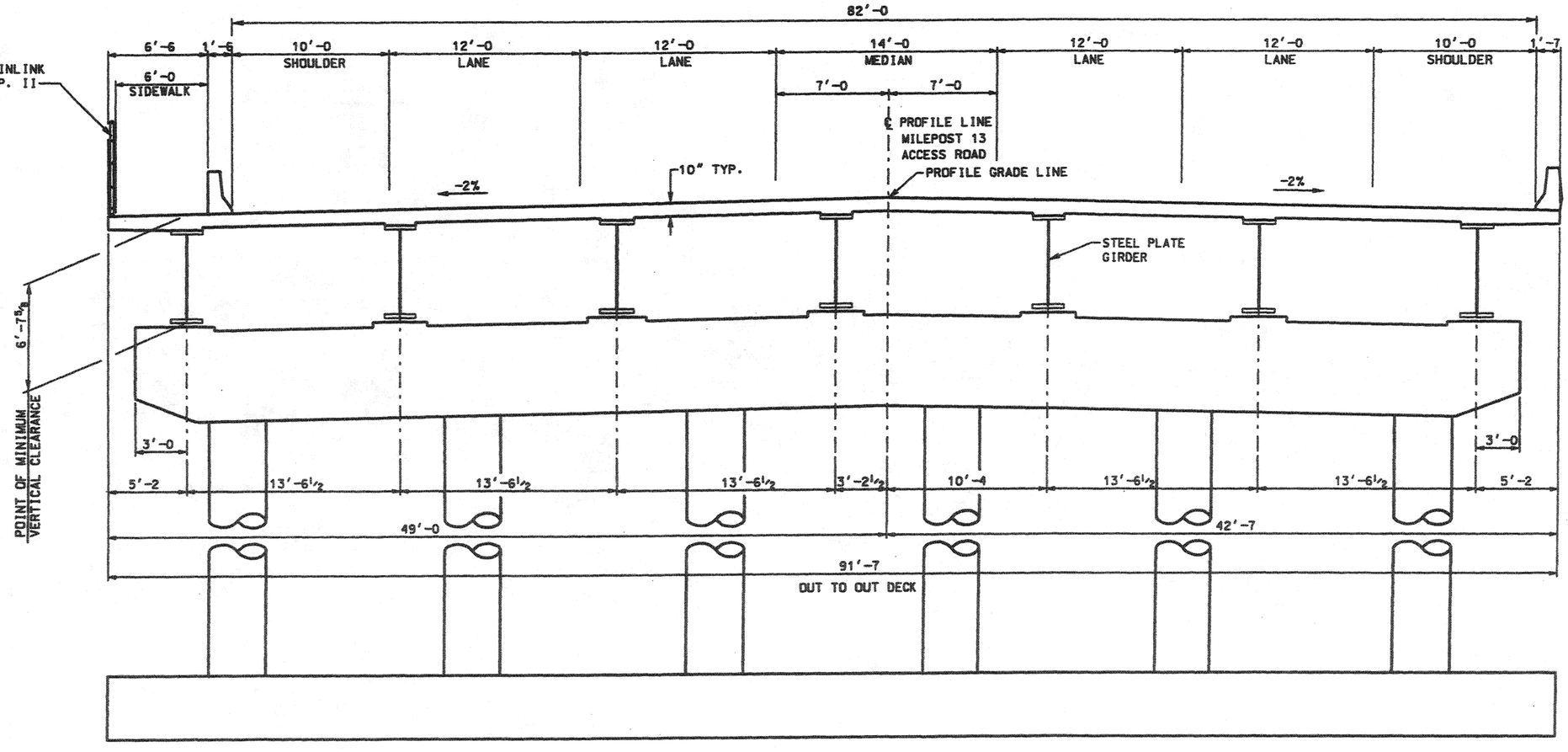

SECTION THRU STRUCTURE

UTAH DEPARTMENT OF TRANSPORTATION
SALT LAKE CITY, UTAH
STRUCTURES DIVISION

DESIGN DH 06/02 CHECK GG 06/02
DRAWN LM 06/02 CHECK DH 06/02
QUANT. CHECK

APPROVAL RECOMMENDED: DATE: SENIOR DESIGN ENGR.
APPROVED BY UDOT: DATE: UDOT BRIDGE ENGR.

NO. DATE BY REMARKS
REVISIONS

WASHINGTON INTERCHANGE AT RP 13
MP 13 ACCESS ROAD OVER I-15
SITUATION AND LAYOUT II

PROJECT NUMBER * SP-15-1(20)13

WASHINGTON COUNTY
C-922 DRG. NO.
SHT. 2 OF 30

DGN. File: N:\Projects\V2878.#83\Struct. Files\Structures\V2878_a_sp72sht2.dgn

I-15, M.P. 13 INTERCHANGE

PROJECT NO: *SP-15-1(20)13
DATE BEGAN: 14 NOV 02
DATE FINISHED: 14 NOV 02
GROUND SURFACE ELEVATION: 3012
GWL DEPTH: 27.2 ft.
GWL DATE/TIME: 12 DEC 02/14:32

BORING NO: BORING 1
STATION: 16+74, MP 13 ACCESS RD.
OFFSET: LT 59 ft.
DRILLING METHOD: ROTARY BIT & HXB CORE
DRILL EQUIP: CME-850

DRILLER: WORWOOD
FIELD GEOLOGIST: SIZEMORE
CONTRACTOR: UDOT
CHECKED BY: D.S.

PAGE 1 OF 1

ELEV (ft)	DEPTH (ft)	SAMPLE TYPE AND NO.	SPT BLOWS/ 6 in./ REC/RQD	Recovery (in)	Lithology	DESCRIPTION	LAB DATA LL (%)	LAB DATA PI (%)	LAB DATA MC (%)	REMARKS
3010	0.0					SILTY SAND: with traces of gravel, red-brown				Casing to 5 ft
						SILTSTONE: A-2-6(1), fractured to highly fractured, clayey with very fine mica flakes, weathered, low strength, red-brown				
3005	-5.0	C.S. 1-5.4	87/5" Ref.	5			35	15	14	
										HXB Core
3000	-10.0	Core 1-15	REC=100% RQD=68%	60		SANDSTONE: light brown				Qult=1500 psi
						SILTSTONE: fractured to highly fractured				
2995	-15.0	Core 1-20	REC=100% RQD=63%	60		with some thin beds of claystone, red-brown				
2990	-20.0	Core 1-25	REC=100% RQD=44%	60		with a few thin beds of claystone and some finely divided mica flakes				
2985	-25.0	Core 1-30	REC=95% RQD=73%	57		with claystone beds and some thin grey siltstone beds and mica flakes				
2980	-30.0	Core 1-35	REC=100% RQD=83%	60		with thin beds of claystone and grey beds of sandy siltstone to silty sandstone				
2975	-35.0	Core 1-40	REC=100% RQD=71%	60		some sandy siltstone and thin to very thin sandstone beds				
2970	-40.0	Core 1-45	REC=100% RQD=68%	60		some sandstone and a few thin beds of claystone and sandstone				
	-45.0					T.D. 45 ft.				

I-15, M.P. 13 INTERCHANGE

PROJECT NO: *SP-15-1(20)13
DATE BEGAN: 05 DEC 02
DATE FINISHED: 05 DEC 02
GROUND SURFACE ELEVATION: 3008
GWL DEPTH: 26.1 ft.
GWL DATE/TIME: 19 DEC 02/14:12

BORING NO: BORING 4
STATION: 16+71, MP 13 ACCESS RD.
OFFSET: RT 55 ft.
DRILLING METHOD: ROTARY BIT & HXB CORE
DRILL EQUIP: CME-850

DRILLER: WORWOOD
FIELD GEOLOGIST: SIZEMORE
CONTRACTOR: UDOT
CHECKED BY: D.S.

PAGE 1 OF 1

ELEV (ft)	DEPTH (ft)	SAMPLE TYPE AND NO.	SPT BLOWS/ 6 in./ REC/RQD	Recovery (in)	Lithology	DESCRIPTION	LAB DATA LL (%)	LAB DATA PI (%)	LAB DATA MC (%)	REMARKS
3005	0.0					SILTY SAND: some gravel, red-brown				Casing to 5 ft
						SILTSTONE: weathered, highly fractured to fractured, red-brown (grey)				Very Easy Drilling
						getting "harder" and less weathered				Easy Drilling
3000	-5.0	Core 1-10	REC=85% RQD=47%	51						HXB Core
	-10.0	Core 1-15	REC=100% RQD=62%	60		CLAYSTONE: fractured, red-brown (grey)				
2995						SILTSTONE: clayey, red-brown (grey)				
	-15.0	Core 1-20	REC=100% RQD=20%	60		SILTSTONE: fractured to highly fractured, some thin beds of mudstone, red-brown (grey)				
2990	-20.0	Core 1-25	REC=100% RQD=80%	60		a few beds of claystone				
2985	-25.0	Core 1-30	REC=100% RQD=90%	60		with beds of clayey siltstone and a couple thin beds of claystone, red-brown and grey				
2980	-30.0	Core 1-35	REC=100% RQD=79%	60						
2975	-35.0					T.D. 35 ft.				

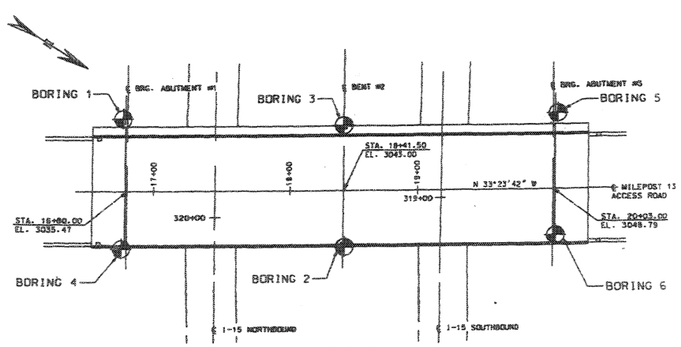

LOCATION PLAN

KEY TO BORING LOG

SYMBOLS

LL - LIQUID LIMIT
PI - PLASTICITY INDEX
NP - NON-PLASTIC
MC - NATURAL MOISTURE CONTENT CO
N - SPT BLOW COUNT
REF - REFUSAL (> 50 BLOWS PER 6")
PEN - SPT SAMPLE
CS - CALIFORNIA SAMPLE
▽ - GROUNDWATER TABLE
A-2-6(1) - AASHTO CLASSIFICATION
CL - USCS CLASSIFICATION

RELATIVE DENSITY (NON-PLASTIC - SAND & SILT)

VERY LOOSE N<4; CS<10
LOOSE N 4-10; CS 10-26
MED DENSE N 10-30; CS 26-72
DENSE N 30-50; CS 72-104
VERY DENSE N>50; CS>104

CONSISTENCY (PLASTIC - SILT & CLAY)

VERY SOFT N<2; CS<2
SOFT N 2-4; CS 2-5
MEDIUM STIFF N 4-8; CS 5-11
STIFF N 8-15; CS 11-22
VERY STIFF N 15-30; CS 22-68
HARD N>30; CS>68

GENERAL NOTES

1. THE SUBSURFACE EXPLORATIONS SHOWN WERE CONDUCTED BETWEEN 14-NOV-02 AND 19-DEC-02 BY THE GEOTECHNICAL DIVISION OF UDOT.
2. THESE BORING LOGS REPRESENT A SYNOPSIS OF THE SOIL DEPOSITS ENCOUNTERED WITHIN EACH BORING AND ARE BASED ON SOUND GEOLOGICAL AND ENGINEERING JUDGMENT. BECAUSE SOIL IS A COMPLEX MEDIUM, THESE BORING LOGS MAY OR MAY NOT REPRESENT THE SOIL CONDITIONS AT THIS SITE. THIS SUBSURFACE INTERPRETATION IS PRESENTED IN GOOD FAITH AND IS NOT INTENDED AS SUBSTITUTE FOR PERSONAL INVESTIGATION AND JUDGEMENT OF THE CONTRACTOR.
3. THE WATER LEVELS AND CONDITIONS INDICATED ON THE BORING LOGS REPRESENT HOLE CONDITIONS ON THE DATE SHOWN, HOWEVER, IT SHOULD BE NOTED, THAT AT LOCATIONS AWAY FROM THE BORINGS OR AT ANOTHER TIME THE WATER LEVELS AND CONDITIONS MAY VARY SIGNIFICANTLY.
4. THE STRATIFICATION LINES REPRESENT THE APPROXIMATE BOUNDARIES BETWEEN SOIL TYPES AND THE TRANSITION MAY BE GRADUAL.
5. COBBLE - A ROCK FRAGMENT WITH AN AVERAGE DIMENSION BETWEEN 3 INCHES AND 12 INCHES
6. BOULDER - A ROCK FRAGMENT WITH AN AVERAGE DIMENSION OF 12 INCHES OR GREATER

NOTE: DRILL RIG USED - CME 850

GEOTECHNICAL ENGINEER

REVISIONS

No.	DATE	BY	REMARKS

UTAH DEPARTMENT OF TRANSPORTATION
SALT LAKE CITY, UTAH
GEOTECHNICAL DIVISION

DESIGN DLS 04-03 | DRAWN LAH 04-03 | CHECK JEB 06-03 | CHECK DLS 06-03 | CHECK DLS 06-03 | GEOLOGIST PJS 04-03

APPROVAL RECOMM. ____ DATE ____ CHIEF GEOTECHNICAL ENGR.
APPROVED ____ DATE ____ DEPUTY DIRECTOR ENGR.

WASHINGTON INTERCHANGE
AT MILEPOST 13 ACCESS ROAD
SOIL DATA SHEET
PROJECT NUMBER *SP-15-1(20)13

WASHINGTON COUNTY
C-922 DRG. NO.
SHT. 3 OF 30

DGN File: N:\Projects\2628.03\Sheet_Files\Geotech\2628_03Sheet01.dgn
25-NOV-2003

I-15, M.P. 13 INTERCHANGE

PROJECT NO: *SP-15-1(20)13	BORING NO: BORING 2	DRILLER: WORWOOD
DATE BEGAN: 04 DEC 02	STATION: 18+40, MP 13 ACCESS RD.	FIELD GEOLOGIST: SIZEMORE
DATE FINISHED: 04 DEC 02	OFFSET: RT 45 ft.	CONTRACTOR: UDOT
GROUND SURFACE ELEVATION: 3020	DRILLING METHOD: ROTARY BIT & HXB CORE	CHECKED BY: D.S.
GWL DEPTH: NOT MEASURED	DRILL EQUIP: CME-850	
GWL DATE/TIME: NOT MEASURED	PAGE 1 OF 1	

ELEV (ft)	DEPTH (ft)	SAMPLE TYPE AND NO.	SPT BLOWS/ 6 in./ REC/RQD	Recovery (in)	Lithology	DESCRIPTION	LAB DATA LL (%)	PI (%)	MC (%)	REMARKS
3020	0.0					SILTY SAND: some gravel, red-brown				Casing to 5 ft
3015	-5.0	Core 2-10	REC=100% RQD=75%	60		SILTSTONE: to SANDY SILTSTONE, fractured and weathered, a few thin beds of sandstone and claystone or mudstone, some mica, low strength, red-brown (grey)				HXB Core Quit=2000 psi
3010	-10.0	Core 2-15	REC=100% RQD=80%	60						Quit=2800 psi
3005	-15.0	Core 2-20	REC=100% RQD=65%	60		SILTSTONE: fractured to highly fractured, beds of sandstone and mudstone, moderately high strength, red-brown (grey)				Quit=5000 psi Quit=5100 psi
3000	-20.0	Core 2-25	REC=100% RQD=65%	60		with beds of claystone and some mudstone, low to moderately high strength				Quit=3000 psi
2995	-25.0									T.D. 25 ft.

I-15, M.P. 13 INTERCHANGE

PROJECT NO: *SP-15-1(20)13	BORING NO: BORING 3	DRILLER: WORWOOD
DATE BEGAN: 04 DEC 02	STATION: 18+41, MP 13 ACCESS RD.	FIELD GEOLOGIST: SIZEMORE
DATE FINISHED: 04 DEC 02	OFFSET: RT 50 ft.	CONTRACTOR: UDOT
GROUND SURFACE ELEVATION: 3011	DRILLING METHOD: ROTARY BIT & HXB CORE	CHECKED BY: D.S.
GWL DEPTH: 12.2 ft.	DRILL EQUIP: CME-850	
GWL DATE/TIME: 19 DEC 02/14:04	PAGE 1 OF 1	

ELEV (ft)	DEPTH (ft)	SAMPLE TYPE AND NO.	SPT BLOWS/ 6 in./ REC/RQD	Recovery (in)	Lithology	DESCRIPTION	LAB DATA LL (%)	PI (%)	MC (%)	REMARKS
3010	0.0					SILTY SAND: with gravel, FILL SILTY SAND: some gravel, red-brown				Casing to 5 ft
3005	-5.0	Core 2-10	REC=97% RQD=82%	58		SILTSTONE: clayey, fractured, low to moderately high strength, red-brown				HXB Core Quit=4000 psi Quit=3700 psi
3000	-10.0	Core 2-15	REC=100% RQD=75%	60		some sandstone, some grey				Quit=3800 psi Quit=2900 psi
2995	-15.0	Core 2-20	REC=100% RQD=63%	60		fractured to highly fractured, with beds of mudstone				Quit=3300 psi
	-20.0									T.D. 20 ft.

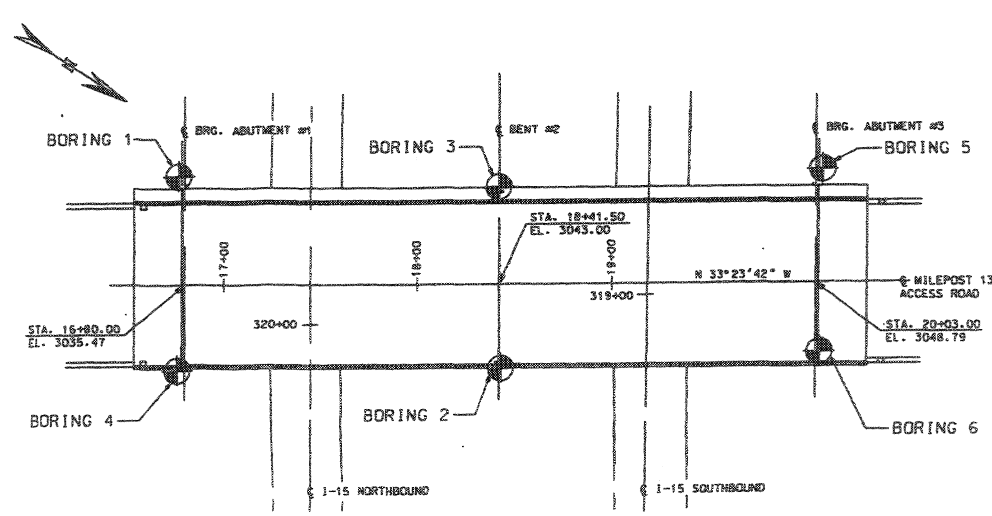

LOCATION PLAN

KEY TO BORING LOG

SYMBOLS

LL- LIQUID LIMIT
PI - PLASTICITY INDEX
NP - NON-PLASTIC
MC - NATURAL MOISTURE CONTENT (%)
N - SPT BLOW COUNT
REF - REFUSAL (> 50 BLOWS PER 6")
PEN - SPT SAMPLE
CS - CALIFORNIA SAMPLE
∇ - GROUNDWATER TABLE
A-2-6(1) - AASHTO CLASSIFICATION
CL - USCS CLASSIFICATION

RELATIVE DENSITY (NON-PLASTIC - SAND & SILT)

VERY LOOSE N<4; CS<10
LOOSE N 4-10; CS 10-26
MED DENSE N 10-30; CS 26-72
DENSE N 30-50; CS 72-104
VERY DENSE N>50; CS>104

CONSISTENCY (PLASTIC - SILT & CLAY)

VERY SOFT N<2; CS<2
SOFT N 2-4; CS 2-5
MEDIUM STIFF N 4-8; CS 5-11
STIFF N 8-15; CS 11-22
VERY STIFF N 15-30; CS 22-60
HARD N>30; CS>60

GENERAL NOTES

1. THE SUBSURFACE EXPLORATIONS SHOWN WERE CONDUCTED BETWEEN 14-NOV-02 AND 19-DEC-02 BY THE GEOTECHNICAL DIVISION OF UDOT.
2. THESE BORING LOGS REPRESENT A SYNOPSIS OF THE SOIL DEPOSITS ENCOUNTERED WITHIN EACH BORING AND ARE BASED ON SOUND GEOLOGICAL AND ENGINEERING JUDGMENT. BECAUSE SOIL IS A COMPLEX MEDIUM, THESE BORING LOGS MAY OR MAY NOT REPRESENT THE SOIL CONDITIONS AT THIS SITE. THIS SUBSURFACE INTERPRETATION IS PRESENTED IN GOOD FAITH AND IS NOT INTENDED AS SUBSTITUTE FOR PERSONAL INVESTIGATION AND JUDGEMENT OF THE CONTRACTOR.
3. THE WATER LEVELS AND CONDITIONS INDICATED ON THE BORING LOGS REPRESENT HOLE CONDITIONS ON THE DATE SHOWN, HOWEVER, IT SHOULD BE NOTED, THAT AT LOCATIONS AWAY FROM THE BORINGS OR AT ANOTHER TIME THE WATER LEVELS AND CONDITIONS MAY VARY SIGNIFICANTLY.
4. THE STRATIFICATION LINES REPRESENT THE APPROXIMATE BOUNDARIES BETWEEN SOIL TYPES AND THE TRANSITION MAY BE GRADUAL.
5. COBBLE - A ROCK FRAGMENT WITH AN AVERAGE DIMENSION BETWEEN 3 INCHES AND 12 INCHES
6. BOULDER - A ROCK FRAGMENT WITH AN AVERAGE DIMENSION OF 12 INCHES OR GREATER

NOTE: DRILL RIG USED - CME 850

GEOTECHNICAL ENGINEER

REVISIONS | REMARKS | BY | DATE | NO.

UTAH DEPARTMENT OF TRANSPORTATION
SALT LAKE CITY, UTAH
GEOTECHNICAL DIVISION

DESIGN DLS 04-03 CHECK JEB 06-03
DRAWN LAH 04-03 CHECK DLS 06-03
GEOLOGIST PJS 04-03 CHECK DLS 06-03

APPROVAL RECOMM. DATE CHIEF GEOTECHNICAL ENGR.
APPROVED DATE UDOT BRIDGE ENGR.

WASHINGTON INTERCHANGE
AT MILEPOST 13 ACCESS ROAD

SOIL DATA SHEET

PROJECT NUMBER *SP-15-1(20)13

WASHINGTON COUNTY

C-922
DRG. NO.

SHT. 4 OF 30

I-15, M.P. 13 INTERCHANGE

PROJECT NO: *SP-15-1(20)13
DATE BEGAN: 05 DEC 02
DATE FINISHED: 10 DEC 02
GROUND SURFACE ELEVATION: 3026
GWL DEPTH: 13.9 ft.
GWL DATE/TIME: 11 DEC 02/07:05

BORING NO: BORING 5
STATION: 20+14, MP 13 ACCESS RD.
OFFSET: LT 66 ft.
DRILLING METHOD: ROTARY BIT & HXB CORE
DRILL EQUIP: CME-850

DRILLER: WORWOOD
FIELD GEOLOGIST: SIZEMORE
CONTRACTOR: UDOT
CHECKED BY: D.S.

PAGE 1 OF 1

ELEV (ft)	DEPTH (ft)	SAMPLE TYPE AND NO.	SPT BLOWS/ 6 in./ REC/RQD	Recovery (in)	Lithology	DESCRIPTION	LAB DATA LL (%)	LAB DATA PI (%)	LAB DATA MC (%)	REMARKS
3025	0.0					SILTY SAND: SM, A-4, with traces of gravel and clay, lightly cemented, light brown				Casing to 40 ft
	-5.0	C.S. 5-6	1-78 Ref.	12		becomes very dense		N.P.	23	
3020						MUDSTONE: highly fractured, red-brown to light red-brown				HXB Core
3015	-10.0	Core 1-15	REC=73% RQD=48%	44		SILTSTONE: fractured, clayey with a few thin beds of claystone and mudstone, moderately high strength, red-brown (grey)				Qult=3200 psi
3010	-15.0	Core 1-20	REC=97% RQD=88%	58						Qult=3700 psi
3005	-20.0	Core 1-25	REC=74% RQD=0%	45		MUDSTONE: highly fractured and weathered, with thin beds of sandstone, siltstone and claystone, red-brown, some grey				large bubbles of hydrogen sulfide gas encountered 20-25 ft.
3000	-25.0	Core 1-30	REC=7% RQD=0%	5		SILTSTONE: red-brown				
2995	-30.0	Core 1-35	REC=63% RQD=46%	37		missing material is probably very poorly cemented fine sandy siltstone clayey, red-brown (grey)				
2990	-35.0	Core 1-40	REC=90% RQD=62%	54		red-brown, some grey beds				
2985	-40.0	Core 1-45	REC=78% RQD=62%	47		clayey, slightly sandy, red-brown (grey)				
2980	-45.0	Core 1-50	REC=85% RQD=48%	51		highly fractured from 44-46 ft. clayey, fractured, slightly gritty with a couple of thin beds of claystone				T.D. 50 ft.
	-50.0									

I-15, M.P. 13 INTERCHANGE

PROJECT NO: *SP-15-1(20)13
DATE BEGAN: 11 DEC 02
DATE FINISHED: 18 DEC 02
GROUND SURFACE ELEVATION: 3019
GWL DEPTH: NOT MEASURED
GWL DATE/TIME: NOT MEASURED

BORING NO: BORING 6
STATION: 20+05, MP 13 ACCESS RD.
OFFSET: RT 32 ft.
DRILLING METHOD: ROTARY BIT & HXB CORE
DRILL EQUIP: CME-850

DRILLER: WORWOOD
FIELD GEOLOGIST: SIZEMORE
CONTRACTOR: UDOT
CHECKED BY: D.S.

PAGE 1 OF 1

ELEV (ft)	DEPTH (ft)	SAMPLE TYPE AND NO.	SPT BLOWS/ 6 in./ REC/RQD	Recovery (in)	Lithology	DESCRIPTION	LAB DATA LL (%)	LAB DATA PI (%)	LAB DATA MC (%)	REMARKS
	0.0					SILTY SAND: trace to some gravel, light red-brown				Casing to 15 ft
3015	-5.0	Core 1-10	REC=78% RQD=38%	47		SILTSTONE: highly fractured to fractured highly weathered, red-brown				getting harder
3010	-10.0	Core 1-15	REC=42% RQD=11%	25		red-brown (grey) clayey, with thin beds of claystone				HXB Core broke spindle at 9 ft while coring
3005	-15.0	Core 1-20	REC=100% RQD=23%	60		sandy from 14.7 to 15.6 ft. clayey, with beds of claystone				
3000	-20.0	Core 1-25	REC=100% RQD=58%	60		sandy, some beds of silty sandstone, moderately high strength, red-brown and grey				Qult=6300 psi
2995	-25.0	Core 1-30	REC=100% RQD=70%	60		moderately high strength sandy to clayey, a few thin beds of claystone				Qult=5000 psi
2990	-30.0	Core 1-35	REC=100% RQD=50%	60						
2985	-35.0	Core 1-40	REC=100% RQD=69%	60		clayey, a few thin beds of claystone				
2980	-40.0									T.D. 40 ft.

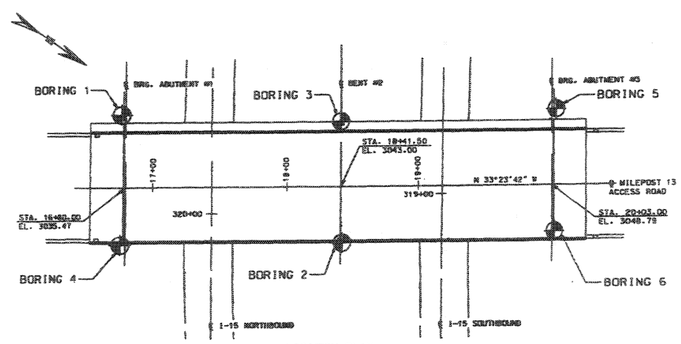

℄LOCATION PLAN

KEY TO BORING LOG

SYMBOLS

LL- LIQUID LIMIT
PI - PLASTICITY INDEX
NP - NON-PLASTIC
MC - NATURAL MOISTURE CONTENT (%)
N - SPT BLOW COUNT
REF - REFUSAL (> 50 BLOWS PER 6")
PEN - SPT SAMPLE
CS - CALIFORNIA SAMPLE
▽ - GROUNDWATER TABLE
A-2-6(0) - AASHTO CLASSIFICATION
CL - USCS CLASSIFICATION

RELATIVE DENSITY (NON-PLASTIC - SAND & SILT)

VERY LOOSE N<4; CS<10
LOOSE N 4-10; CS 10-25
MED DENSE N 10-30; CS 25-72
DENSE N 30-50; CS 72-104
VERY DENSE N>50; CS>104

CONSISTENCY (PLASTIC - SILT & CLAY)

VERY SOFT N<2; CS<2
SOFT N 2-4; CS 2-5
MEDIUM STIFF N 4-8; CS 5-11
STIFF N 8-15; CS 11-22
VERY STIFF N 15-30; CS 22-68
HARD N>30; CS>68

GENERAL NOTES

1. THE SUBSURFACE EXPLORATIONS SHOWN WERE CONDUCTED BETWEEN 14-NOV-02 AND 19-DEC-02 BY THE GEOTECHNICAL DIVISION OF UDOT.
2. THESE BORING LOGS REPRESENT A SYNOPSIS OF THE SOIL DEPOSITS ENCOUNTERED WITHIN EACH BORING AND ARE BASED ON SOUND GEOLOGICAL AND ENGINEERING JUDGMENT. BECAUSE SOIL IS A COMPLEX MEDIUM, THESE BORING LOGS MAY OR MAY NOT REPRESENT THE SOIL CONDITIONS AT THIS SITE. THIS SUBSURFACE INTERPRETATION IS PRESENTED IN GOOD FAITH AND IS NOT INTENDED AS SUBSTITUTE FOR PERSONAL INVESTIGATION AND JUDGEMENT OF THE CONTRACTOR.
3. THE WATER LEVELS AND CONDITIONS INDICATED ON THE BORING LOGS REPRESENT HOLE CONDITIONS ON THE DATE SHOWN, HOWEVER, IT SHOULD BE NOTED, THAT AT LOCATIONS AWAY FROM THE BORINGS OR AT ANOTHER TIME THE WATER LEVELS AND CONDITIONS MAY VARY SIGNIFICANTLY.
4. THE STRATIFICATION LINES REPRESENT THE APPROXIMATE BOUNDARIES BETWEEN SOIL TYPES AND THE TRANSITION MAY BE GRADUAL.
5. COBBLE - A ROCK FRAGMENT WITH AN AVERAGE DIMENSION BETWEEN 3 INCHES AND 12 INCHES
6. BOULDER - A ROCK FRAGMENT WITH AN AVERAGE DIMENSION OF 12 INCHES OR GREATER

NOTE: DRILL RIG USED - CME 850

GEOTECHNICAL ENGINEER

NO.	DATE	REMARKS

REVISIONS

UTAH DEPARTMENT OF TRANSPORTATION
SALT LAKE CITY, UTAH
GEOTECHNICAL DIVISION

DESIGN DLS 04-03 CHECK JEB 06-03
DRAWN LAH 04-03 CHECK DLS 06-03
GEOLOGIST PJS 04-03 CHECK DLS 06-03

PERSONAL RECORD — DATE — CHIEF GEOTECHNICAL ENGR.
APPROVED — DATE — UDOT INTERIM ENGINEER

WASHINGTON INTERCHANGE
AT MILEPOST 13 ACCESS ROAD
SOIL DATA SHEET
PROJECT NUMBER *SP-15-1(20)13

WASHINGTON COUNTY
C-922 DRG. NO.
SHT. 5 OF 30

DGN: File:N:\Projects\2928.83\Sheet_Files\Borings\2928_83sheet5.dgn
25-NOV-2003

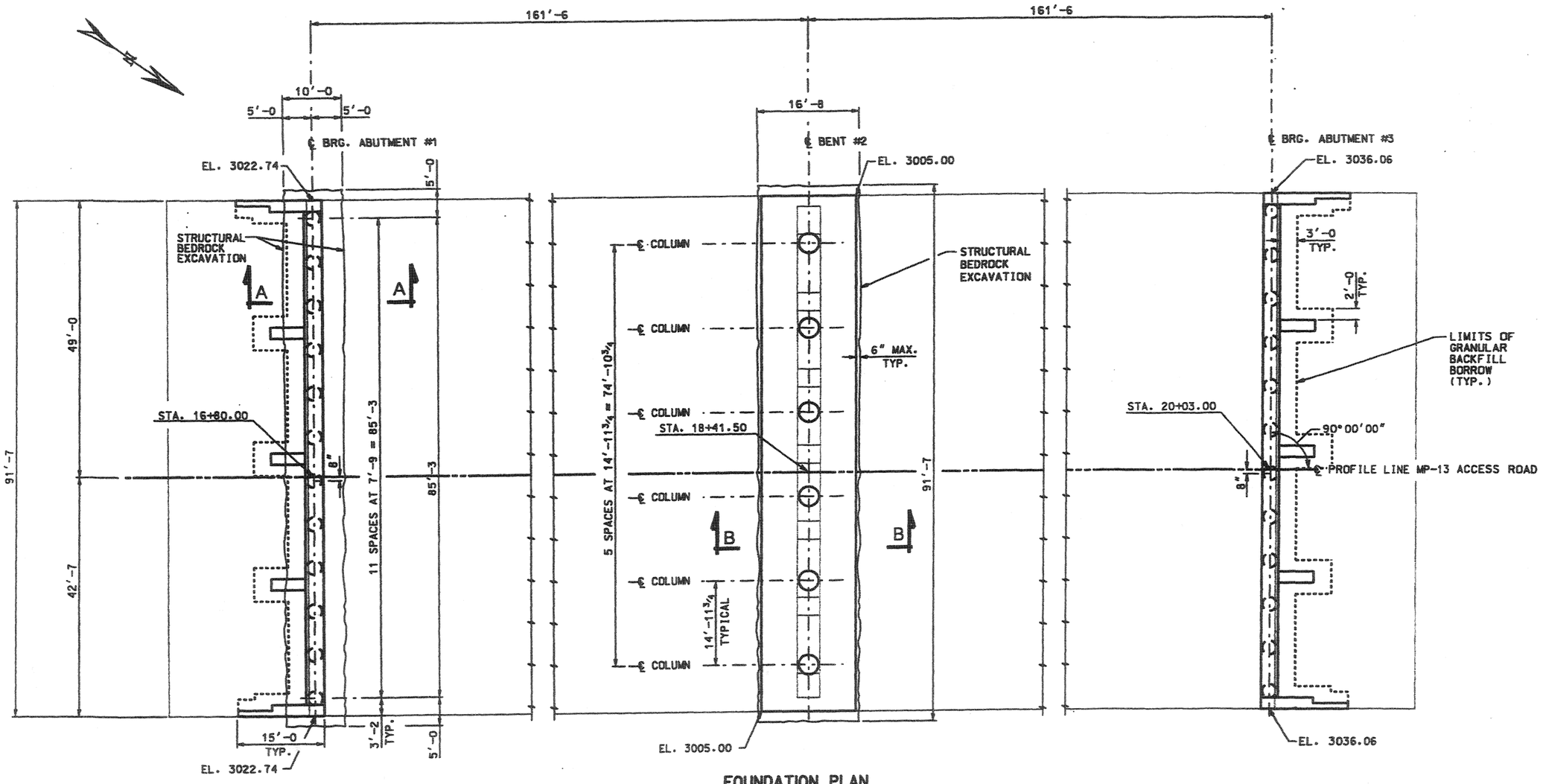

FOUNDATION PLAN

NOTES:

1. ALL ELEVATIONS SHOWN ARE AT BOTTOM OF FOOTING OR ABUTMENTS.
2. SEE "CAISSON DETAILS" FOR SECTIONS AND DETAILS.
3. CENTERLINE OF ABUTMENTS AND BENT ARE PARALLEL TO BRG. N 56°36'18" E.
4. LIMITS OF GRANULAR BACKFILL BORROW AT ABUT. #1 AND ABUT. #3 ARE FROM BOTTOM OF STRUCTURE TO BOTTOM OF APPROACH SLAB.

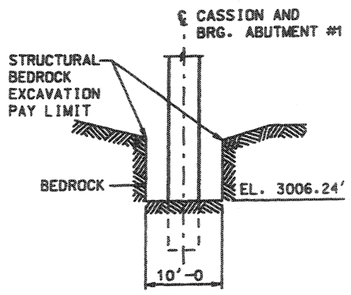

SECTION A-A

LIMITS OF BEDROCK EXCAVATION

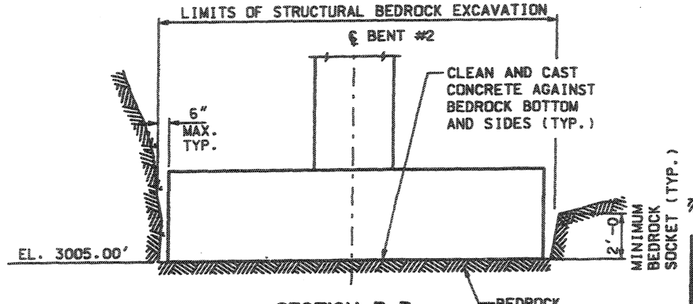

SECTION B-B

QUANTITIES	
GRANULAR BACKFILL BORROW	269 CU.YD.
STRUCTURAL BEDROCK EXCAVATION	505 CU.YD.

UTAH DEPARTMENT OF TRANSPORTATION
SALT LAKE CITY, UTAH
STRUCTURES DIVISION

NO.	DATE	BY	REVISIONS

DESIGN GG 05/03 CHECK HCB 05/03
DRAWN LM 05/03 CHECK GG 05/03
QUANT. VH 05/03 CHECK GG 05/03

APPROVED FOR USE BY DUDOT — DATE — DUDOT BRIDGE ENGR.
APPROVED — DATE — SENIOR PROJECT ENGR.

WASHINGTON INTERCHANGE AT RP 13
MP 13 ACCESS ROAD OVER I-15
FOUNDATION PLAN

PROJECT NUMBER * SP-15-1(20)13

WASHINGTON COUNTY
C-922 DRG. NO.
SHT. 6 OF 30

DGN: File:\N:\Projects\2928.03\Sheet Files\Structures\2928_s922fnd.dgn
W-2893

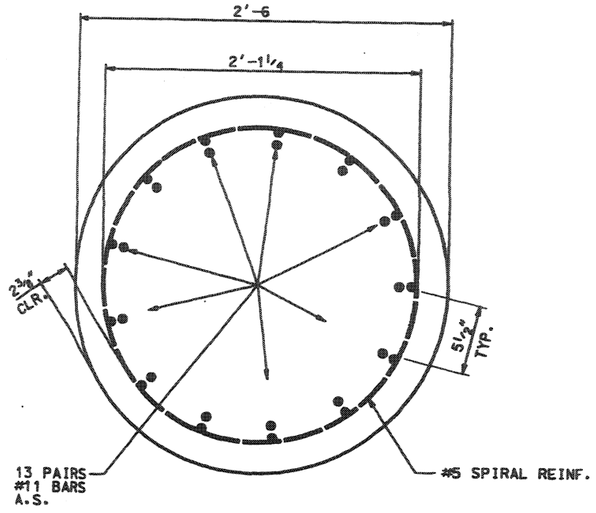

SECTION A-A

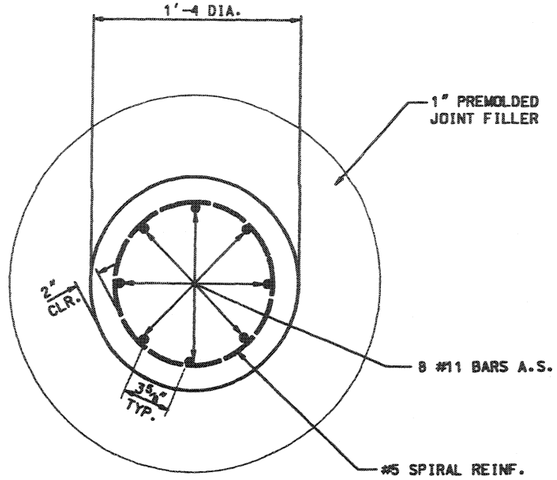

SECTION B-B

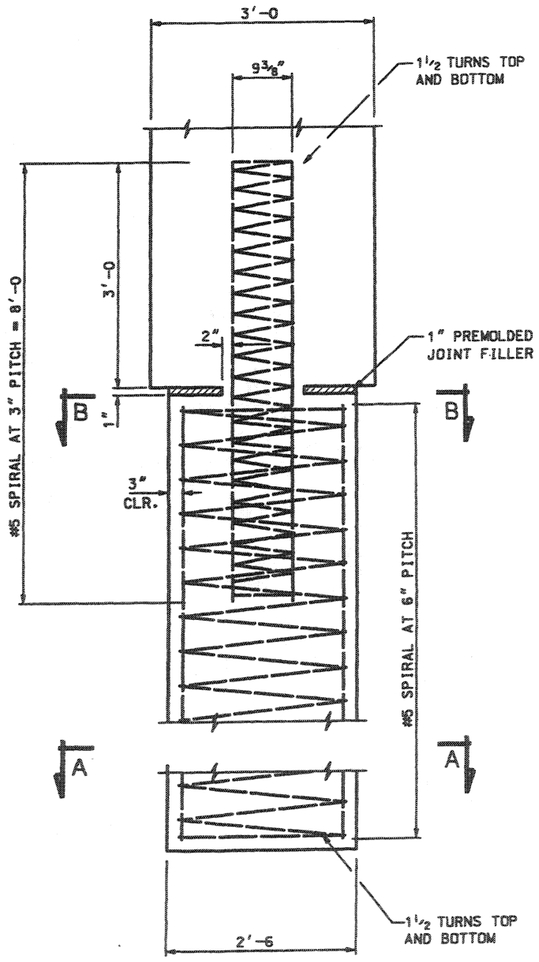

CAISSON DETAIL

NOTES:

1. ESTIMATED CAISSON TIP ELEVATIONS SHOWN ARE APPROXIMATE AND WILL BE VERIFIED AT THE TIME OF CONSTRUCTION IN ACCORDANCE WITH THE SPECIFICATIONS.
2. INCLUDE REINFORCING STEEL AND CONCRETE FOR CAISSONS IN CONTRACT PRICE FOR DRILLED CAISSONS.
3. USE CLASS 3A (AE) FOR CAISSON CONCRETE f 'c = 4000 psi.

CAISSON DATA

LOCATION	CAISSON DIAMETER	ESTIMATED CAISSON TIP ELEV. (FEET)	MINIMUM BEDROCK PENETRATION DEPTH (FEET)	ALLOWABLE CAISSON LOAD (KIPS)	AS CONST. CAISSON TIP EL. (FEET)
ABUT.#1	2'-6	3001.24	5	328	
ABUT.#3	2'-6	3012.50	5	328	

REVISIONS

NO.	DATE	BY	REMARKS

UTAH DEPARTMENT OF TRANSPORTATION
SALT LAKE CITY, UTAH
STRUCTURES DIVISION

DESIGN GG 05/03 CHECK HCB 05/03
DRAWN LM 05/03 CHECK GG 05/03
QUANT. CHECK GG 05/03

APPROVAL RECOMM. DATE SENIOR BRIDGE ENGR.
APPROVED FOR USE BY UDOT DATE UDOT BRIDGE ENGR.

WASHINGTON INTERCHANGE AT RP 13
MP 13 ACCESS ROAD OVER I-15
CAISSON DETAILS

PROJECT NUMBER * SP-15-1(20)13

WASHINGTON COUNTY

C-922 DRG. NO.

SHT. 7 OF 30

DGN: F:\pw_work\Projects\2928.83\Sheet_Files\Structural\2928_s922caisson.dgn
25-NOV-2003

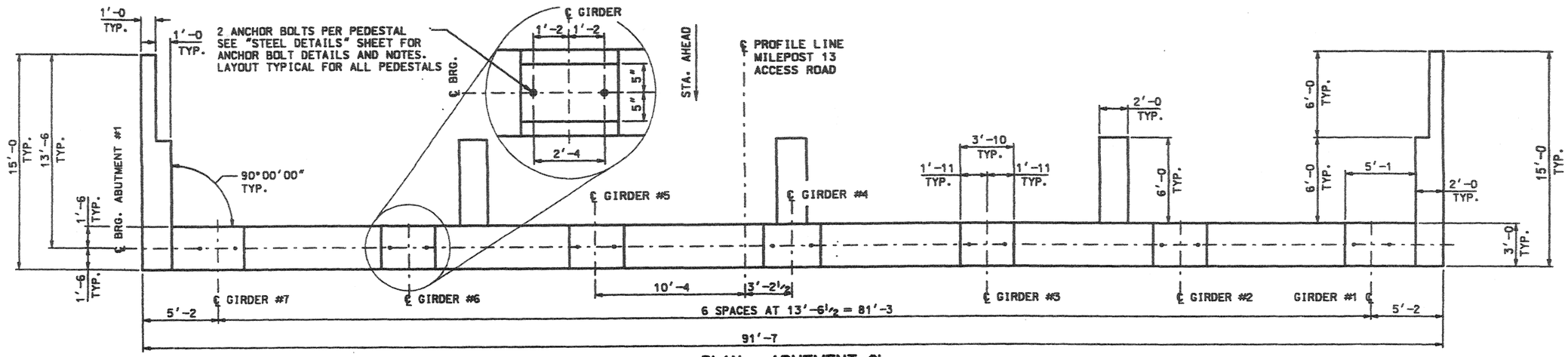

PLAN - ABUTMENT #1

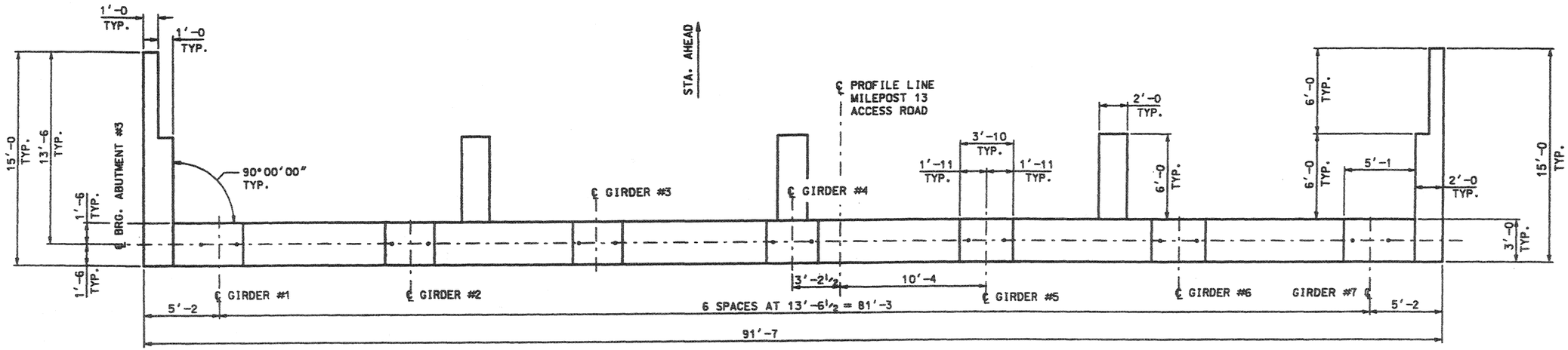

PLAN - ABUTMENT #3

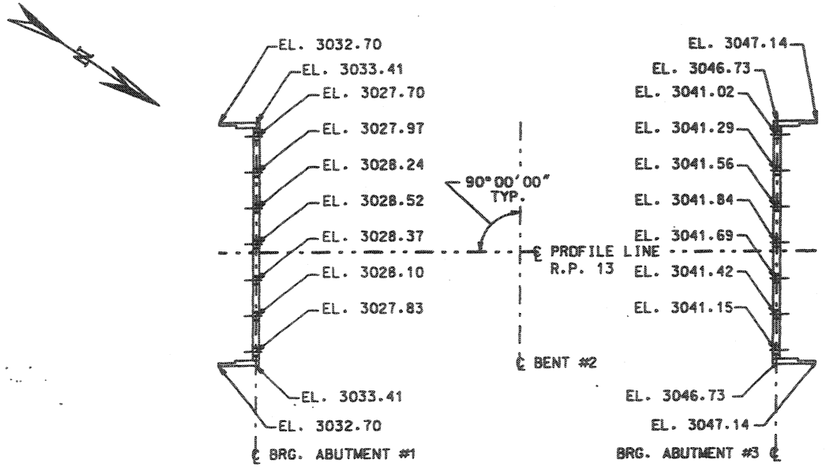

KEY PLAN

NOTE:

1. ELEVATIONS SHOWN ARE TOP OF WINGWALL AND TOP OF PEDESTAL.

STRUCTURAL CONCRETE QUANTITIES	
LOCATION	CUBIC YARDS
ABUTMENT #1	51.7
ABUTMENT #3	51.7
WINGWALLS	32.2
FINWALLS	28.4
TOTAL	164.0

NO.	DATE	BY	REVISIONS	REMARKS

UTAH DEPARTMENT OF TRANSPORTATION
SALT LAKE CITY, UTAH
STRUCTURES DIVISION

DESIGN GG 05/03 CHECK HCB 05/03
DRAWN LM 05/03 CHECK GG 05/03
QUANT. VH 05/03 CHECK GG 05/03

APPROVAL RECOMM. — DATE — SENIOR BRIDGE ENGR.
APPROVED FOR USE BY UDOT — DATE — UDOT BRIDGE ENGR.

WASHINGTON INTERCHANGE AT RP 13
MP 13 ACCESS ROAD OVER I-15
ABUTMENT PLAN

PROJECT NUMBER * SP-15-1(20)13

WASHINGTON COUNTY

C-922 DRG. NO.

SHT. 8 OF 30

DGN. Files:N:\Projects\2828.#3\Struct\Sheets Files\Structures\2828_#32abutmplan.dgn
JOV-2853

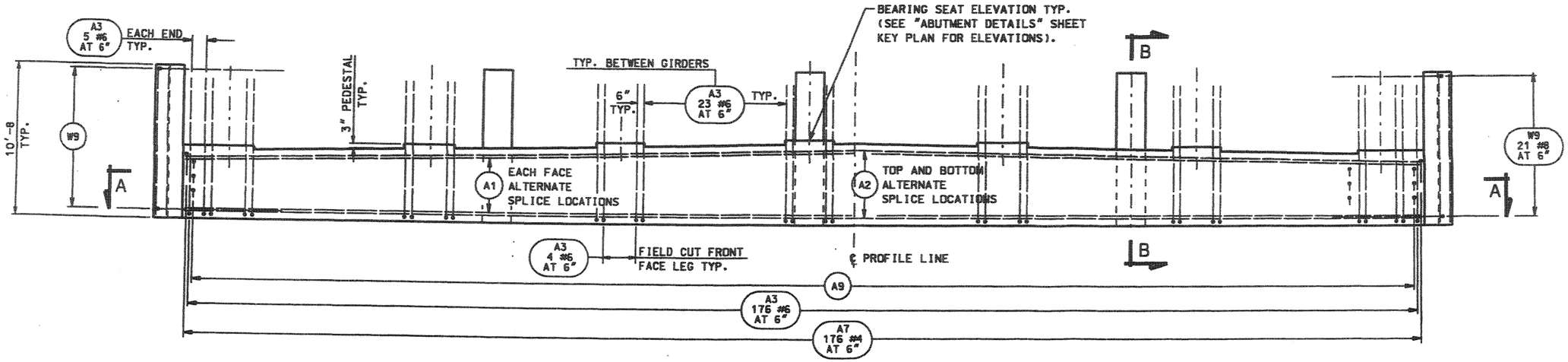

ELEVATION

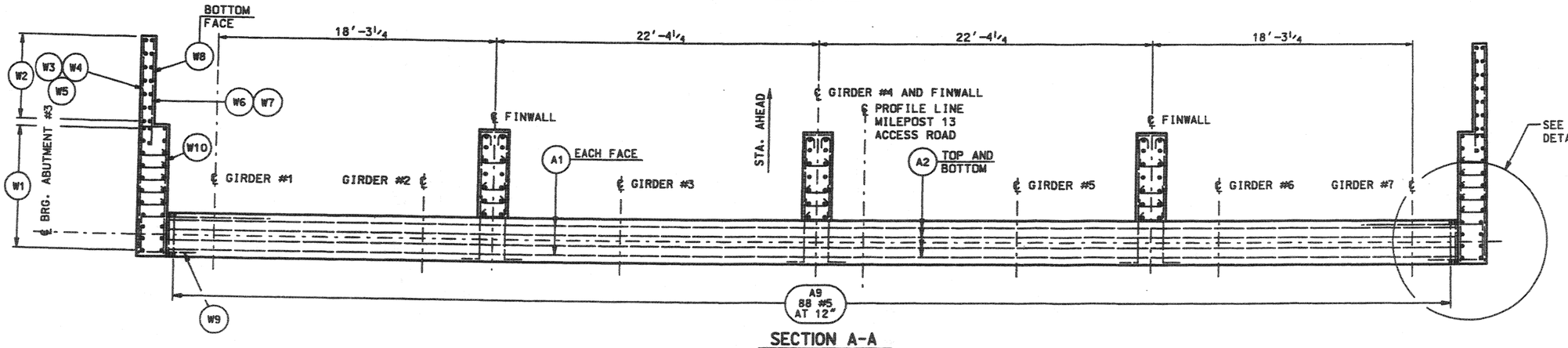

SECTION A-A

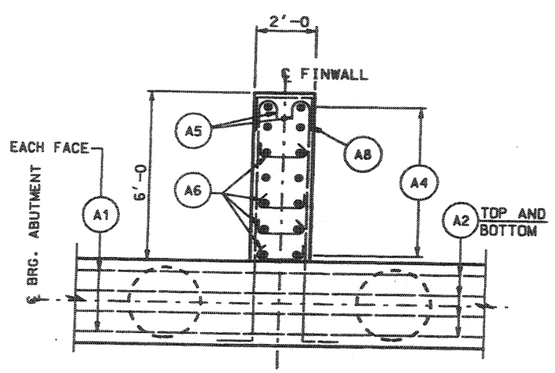

FINWALL DETAIL

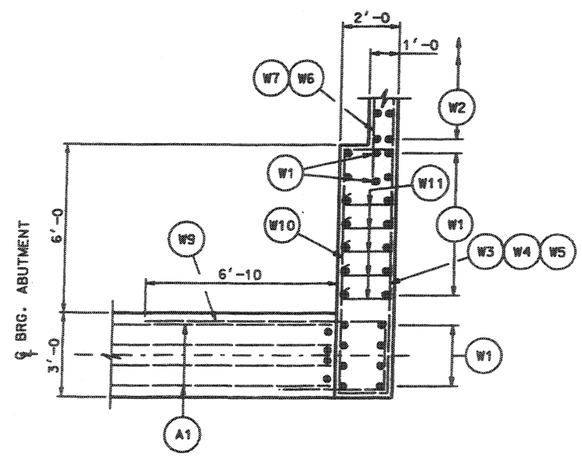

DETAIL "D"

NOTES:

1. SEE "ABUTMENT DETAILS" SHEET FOR SECTION "B-B".

REVISIONS			
NO.	DATE	BY	REMARKS

UTAH DEPARTMENT OF TRANSPORTATION
SALT LAKE CITY, UTAH
STRUCTURES DIVISION

DESIGN GG 05/03 CHECK HCB 05/03
DRAWN LM 05/03 CHECK GG 05/03
QUANT. VH 05/03 CHECK GG 05/03

ORIGINAL RECORD. DATE ____ SECTION DESIGN ENGR. ____
APPROVED FOR USE BY UDOT DATE ____ UDOT BRIDGE ENGR. ____

WASHINGTON INTERCHANGE AT RP 13
MP 13 ACCESS ROAD OVER I-15
ABUTMENT SECTION AND ELEVATION

PROJECT NUMBER * SP-15-1(20)13

WASHINGTON COUNTY
C-922 DRG. NO.
SHT. 9 OF 30

D:\DGN Files\INProjects\2928.03\Sheet Files\Structure\2928_e922abutelev3.dgn
28-NOV-2003

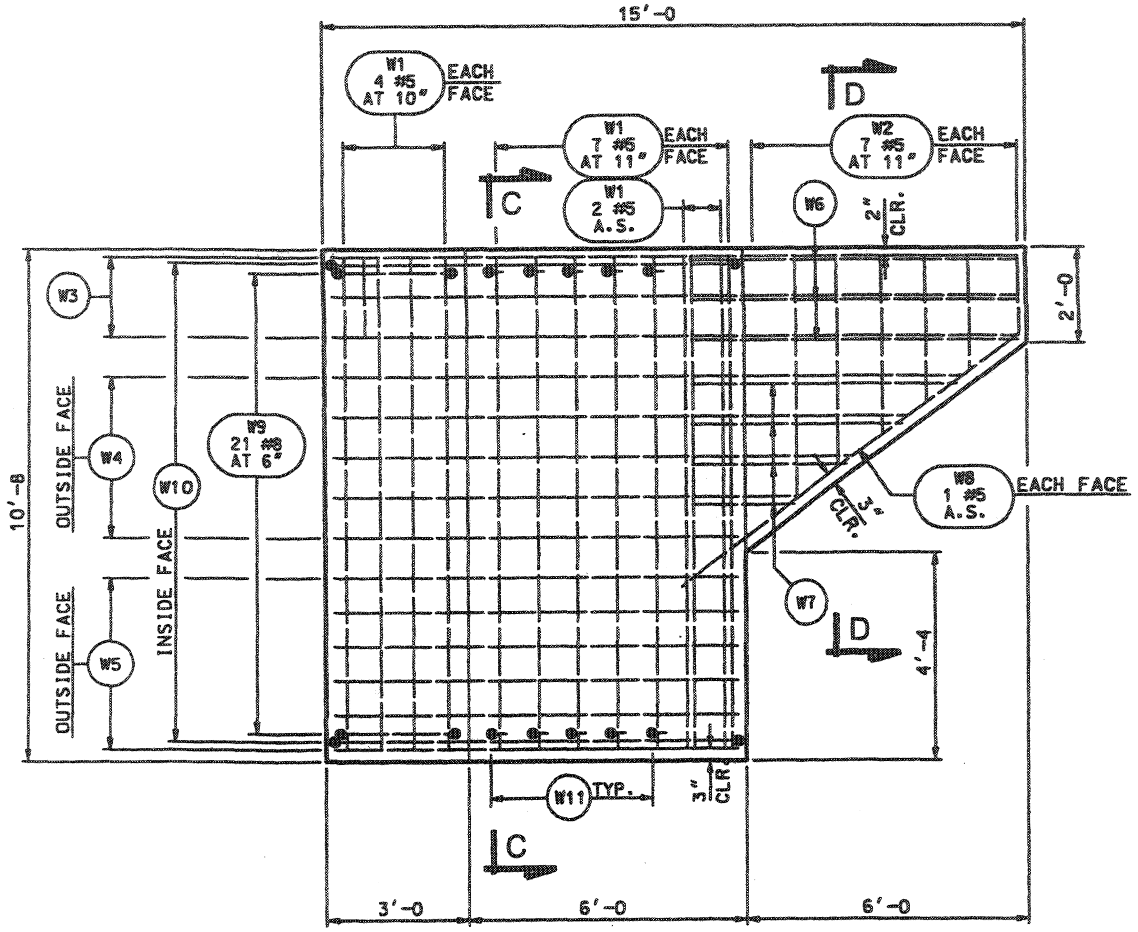

WINGWALL ELEVATION

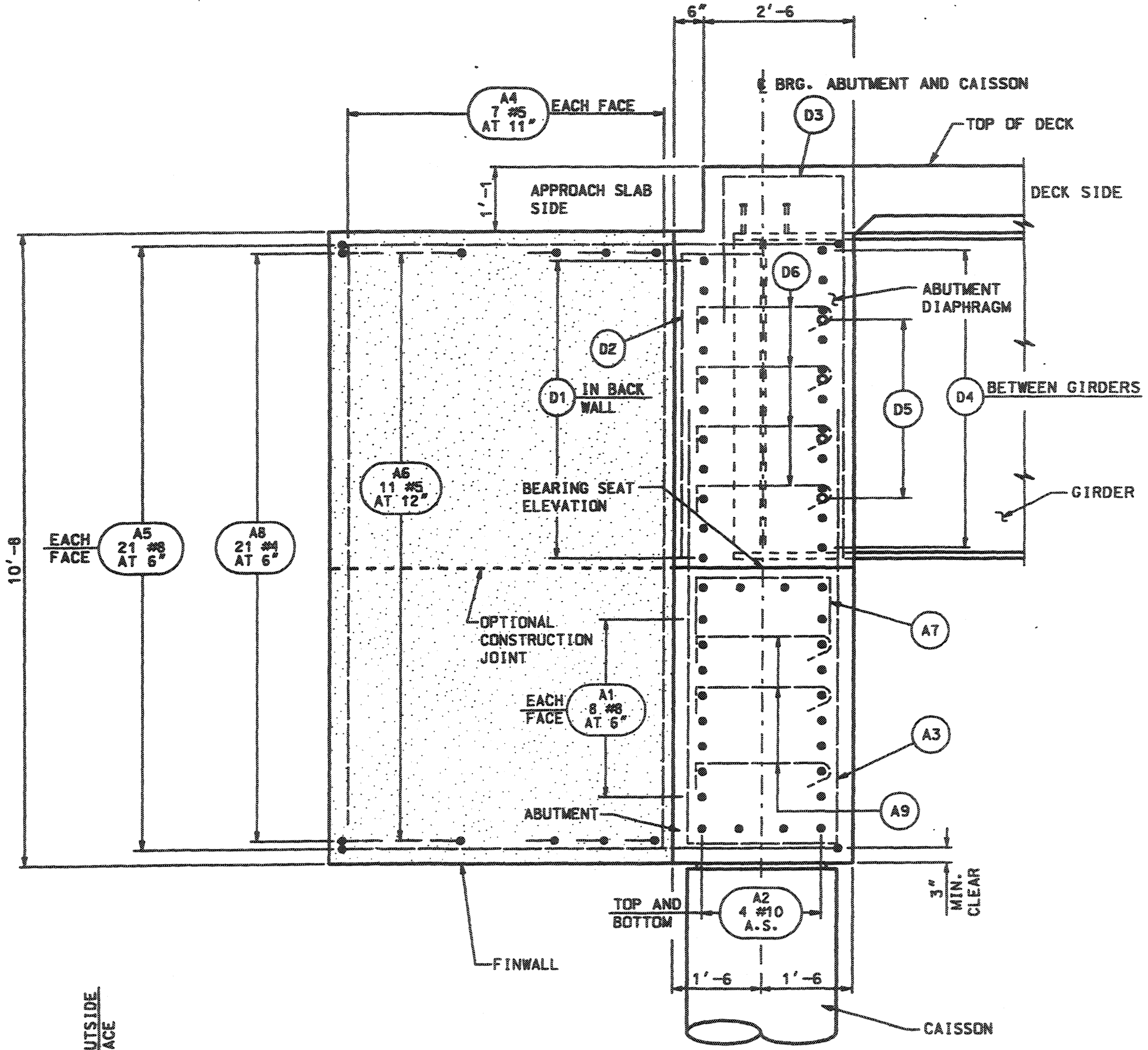

SECTION B-B

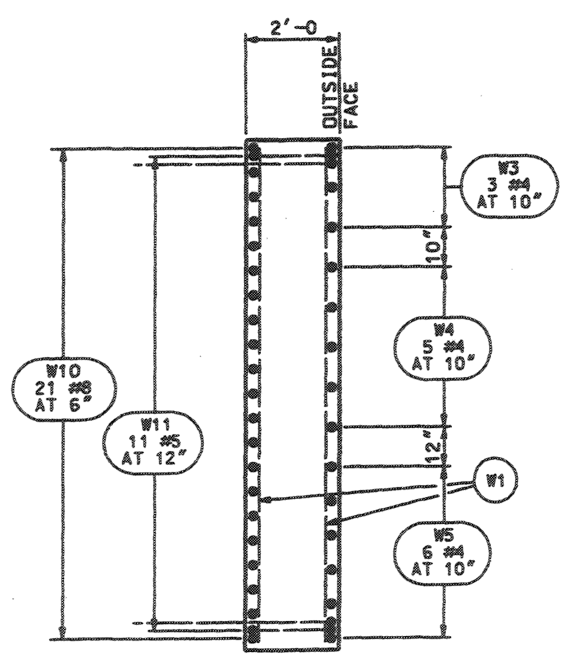

SECTION C-C

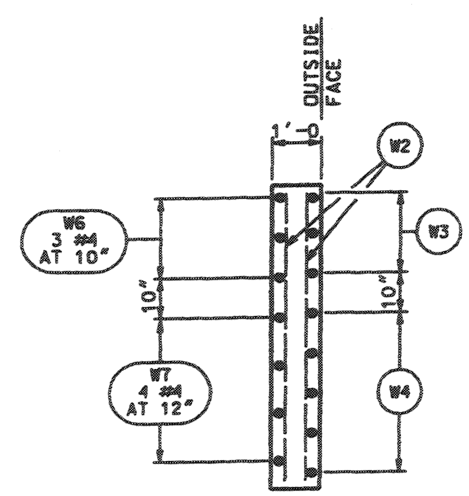

SECTION D-D

NOTES:

1. SEE "CAISSON DETAILS" SHEET FOR CAISSON LAYOUT.
2. FINISH BRIDGE SEAT BEARING AREA (2" LARGER THAN ELASTOMERIC PAD) HIGH AND RUB OR GROUND LEVEL TO ELEVATION SHOWN ± 1/16". NO GROUTING.
3. SEE "ABUTMENT ELEVATION AND SECTION" SHEET FOR LOCATION OF SECTION B-B AND ADDITIONAL DETAILS.
4. SEE "DECK SECTION" SHEET FOR ADDITIONAL DIAPHRAGM DETAILS AND UTILITY LOCATIONS.

REVISIONS — NO. | DATE | BY | REMARKS

UTAH DEPARTMENT OF TRANSPORTATION
SALT LAKE CITY, UTAH
STRUCTURES DIVISION

DESIGN GG 05/03 CHECK HCB 05/03
DRAWN LM 05/03 CHECK GG 05/03
QUANT. VH 05/03 CHECK GG 05/03

APPROVAL RECOMM. ____ DATE ____ SENIOR DESIGN ENGR.
APPROVED FOR USE BY UDOT ____ DATE ____ UDOT BRIDGE ENGR.

WASHINGTON INTERCHANGE AT RP 13
MP 13 ACCESS ROAD OVER I-15

ABUTMENT DETAILS

PROJECT NUMBER * SP-15-1(20)13

WASHINGTON COUNTY

C-922
DRG. NO.

SHT. 10 OF 30

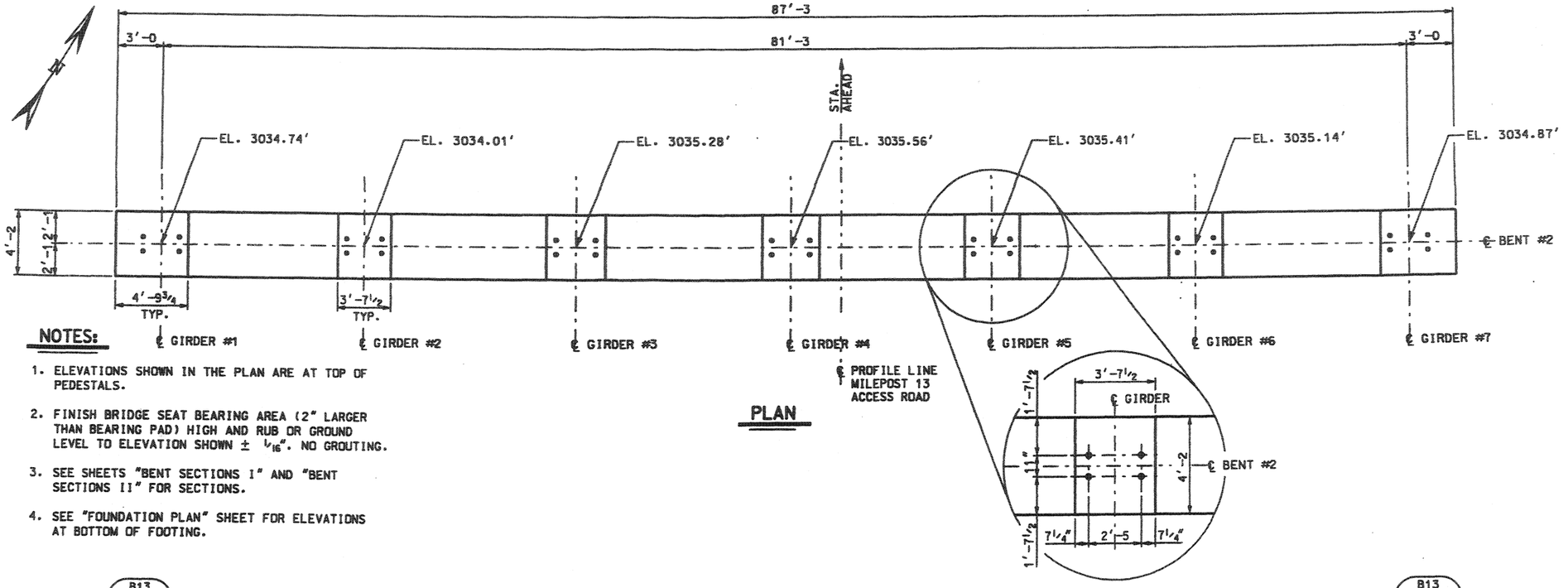

PLAN

NOTES:

1. ELEVATIONS SHOWN IN THE PLAN ARE AT TOP OF PEDESTALS.
2. FINISH BRIDGE SEAT BEARING AREA (2" LARGER THAN BEARING PAD) HIGH AND RUB OR GROUND LEVEL TO ELEVATION SHOWN ± 1/16". NO GROUTING.
3. SEE SHEETS "BENT SECTIONS I" AND "BENT SECTIONS II" FOR SECTIONS.
4. SEE "FOUNDATION PLAN" SHEET FOR ELEVATIONS AT BOTTOM OF FOOTING.

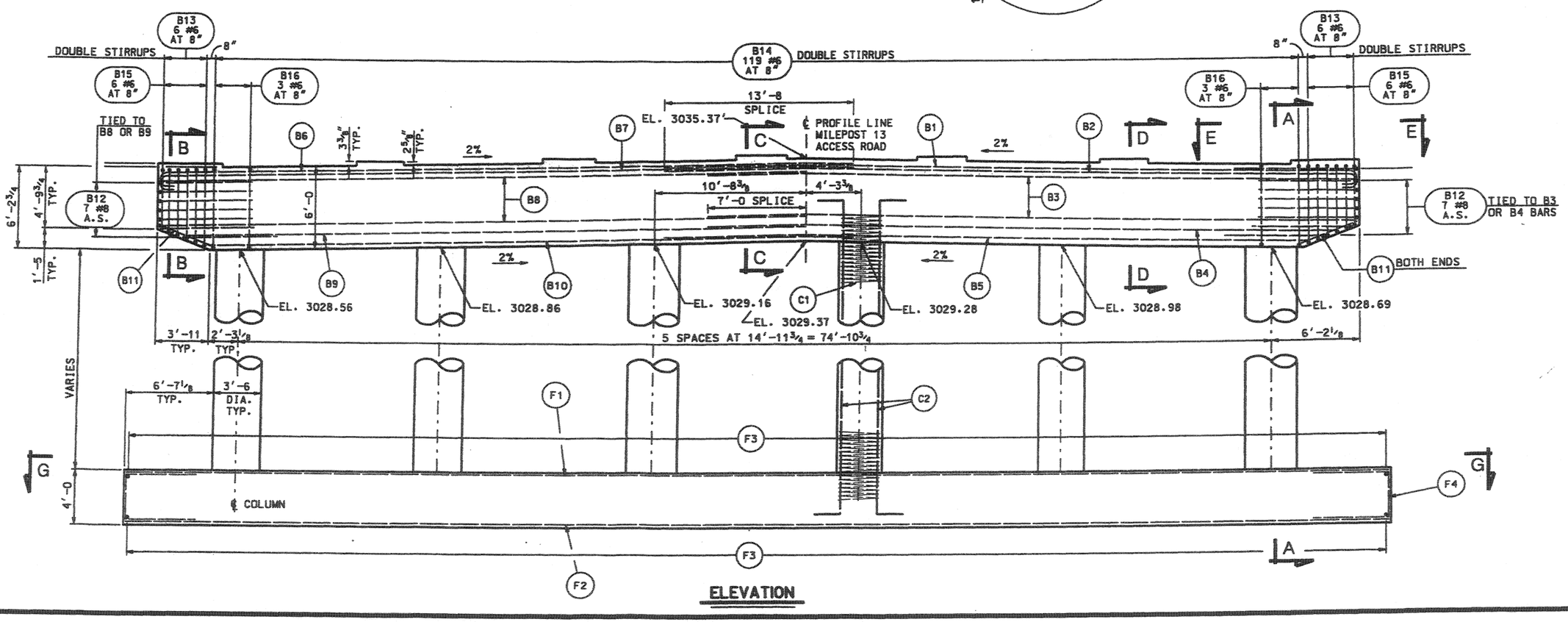

ELEVATION

DGN: Files:NAVProjects:V2528.#FN:Sheet Files:Structures:V2528_s122bnts1dgn

28-NOV-2003

UTAH DEPARTMENT OF TRANSPORTATION
SALT LAKE CITY, UTAH
STRUCTURES DIVISION

NO.	DATE	BY	REVISIONS	REMARKS

DESIGN GG 05/03 CHECK HCB 05/03
DRAWN LM 05/03 CHECK GG 05/03
QUANT. VH 05/03 CHECK GG 05/03

APPROVAL RECOMMENDED: DATE ____ REGION DESIGN ENGR.
APPROVED FOR USE BY DDOT: DATE ____ DDOT BRIDGE ENGR.

WASHINGTON INTERCHANGE AT RP 13
MP 13 ACCESS ROAD OVER I-15
BENT #2 DETAILS

PROJECT NUMBER * SP-15-1(20)13

WASHINGTON COUNTY

C-922 DRG. NO.

SHT. 11 OF 30

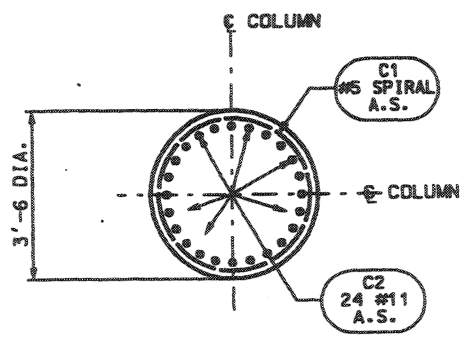

SECTION F-F

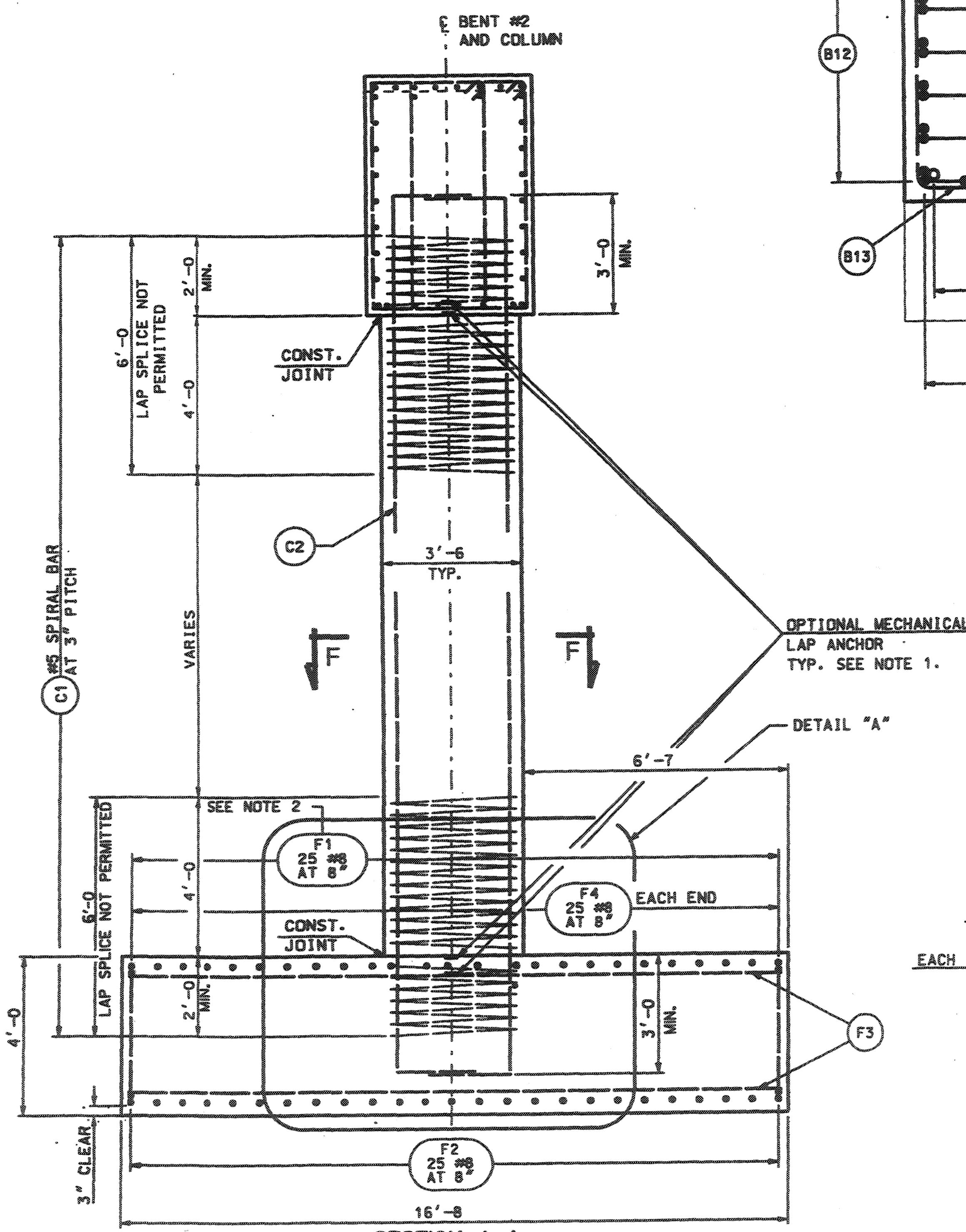

SECTION A-A

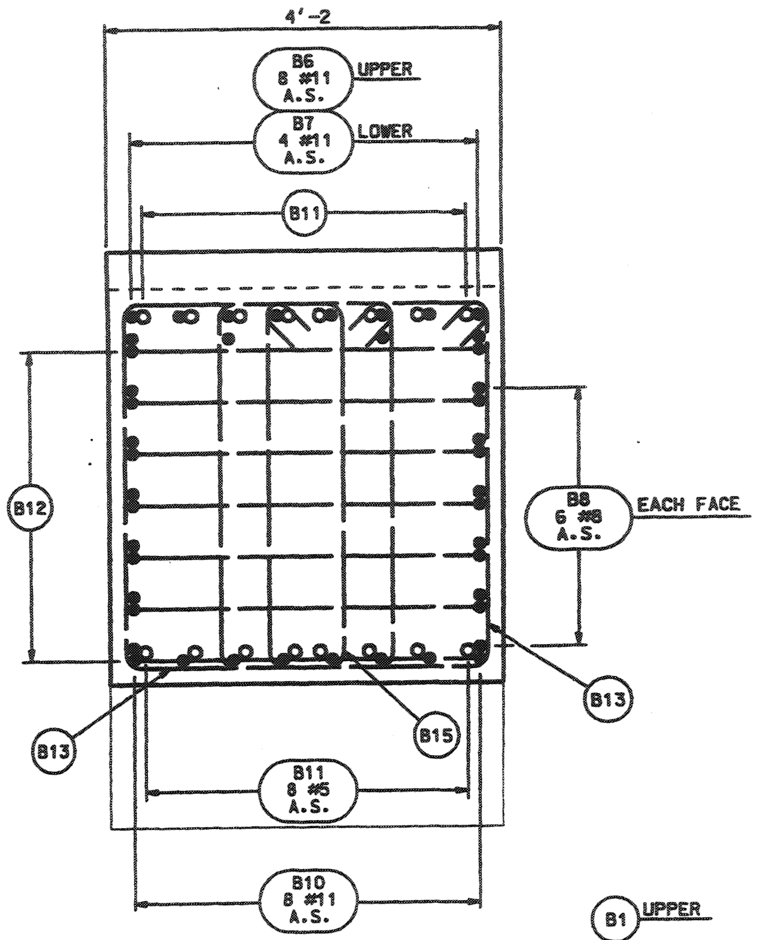

SECTION B-B

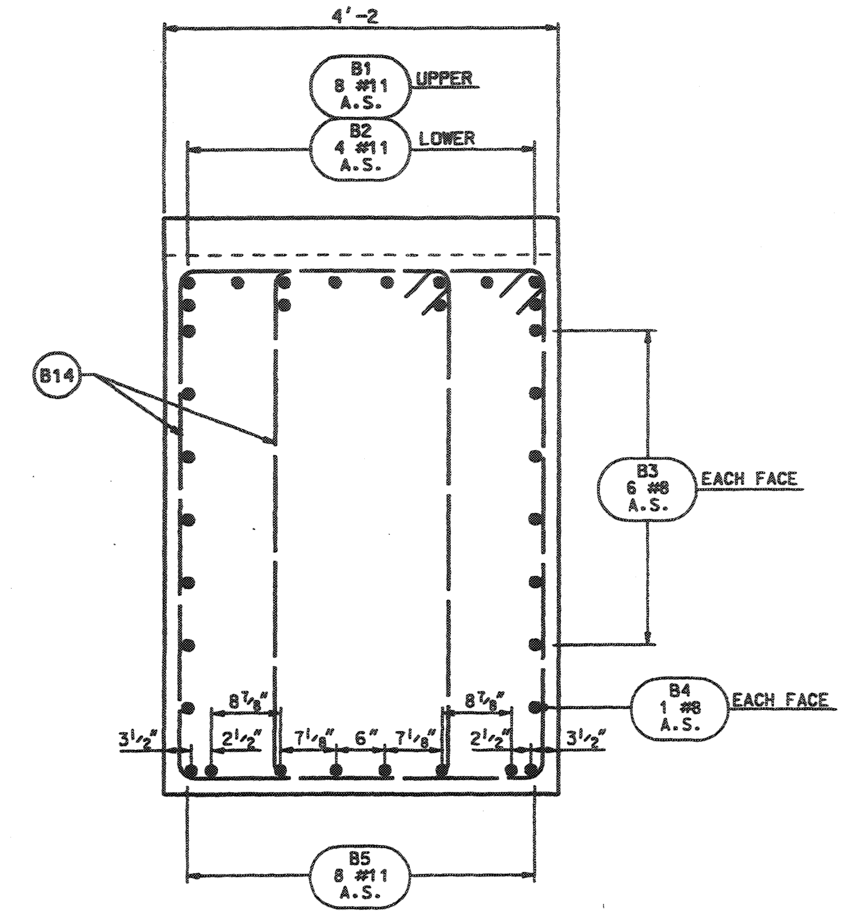

SECTION D-D

B10'S POSITIONS ARE SIMILAR TO B5'S

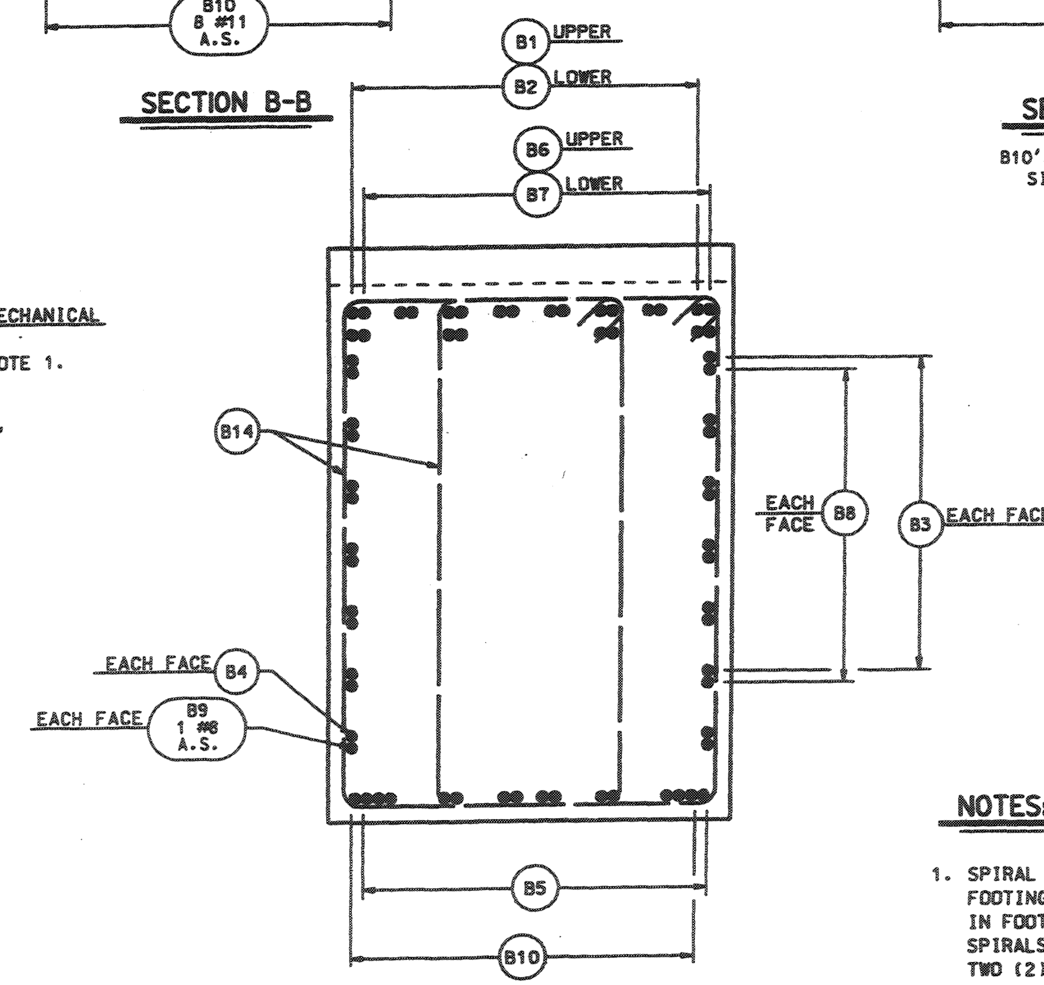

SECTION C-C

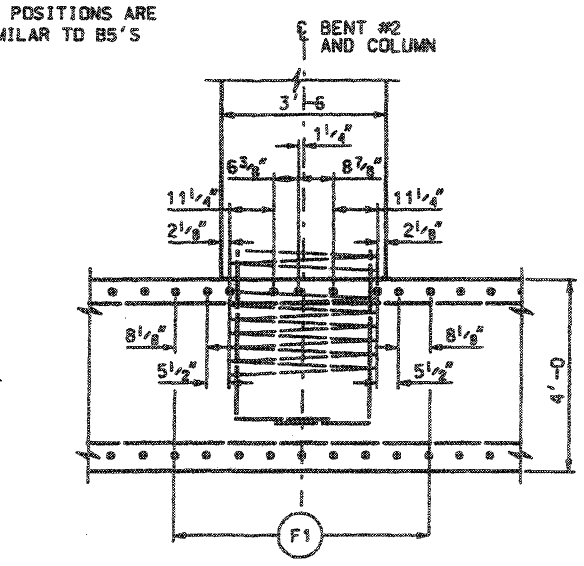

DETAIL "A"

NOTES:

1. SPIRAL REINFORCING IN BENT CAP, COLUMN AND FOOTING MAY BE DISCONTINUOUS AT REINFORCING IN FOOTING AND CAP. IF DISCONTINUOUS, TERMINATE SPIRALS REINFORCING WITH $1^1/_2$ FULL TURNS AND TWO (2) MECHANICAL LAP ANCHORS. THE GAP IN THE SPIRAL MUST NOT EXCEED 3 IN.

2. ADJUST F1 SPACING AT COLUMNS PER DETAIL "A".

NO.	DATE	BY	REMARKS

REVISIONS

UTAH DEPARTMENT OF TRANSPORTATION
SALT LAKE CITY, UTAH
STRUCTURES DIVISION

DESIGN GG 05/03 CHECK HCB 05/03
DRAWN LM 05/03 CHECK GG 05/03
QUANT. VH 05/03 CHECK GG 05/03

APPROVAL RECOM. ___ DATE ___ SENIOR DESIGN ENGR.
APPROVED FOR USE BY UDOT ___ DATE ___ UDOT BRIDGE ENGR.

WASHINGTON INTERCHANGE AT RP 13
MP 13 ACCESS ROAD OVER I-15
BENT SECTIONS I

PROJECT NUMBER * SP-15-1(20)13

WASHINGTON COUNTY

C-922
DRG. NO.

SHT. 12 OF 30

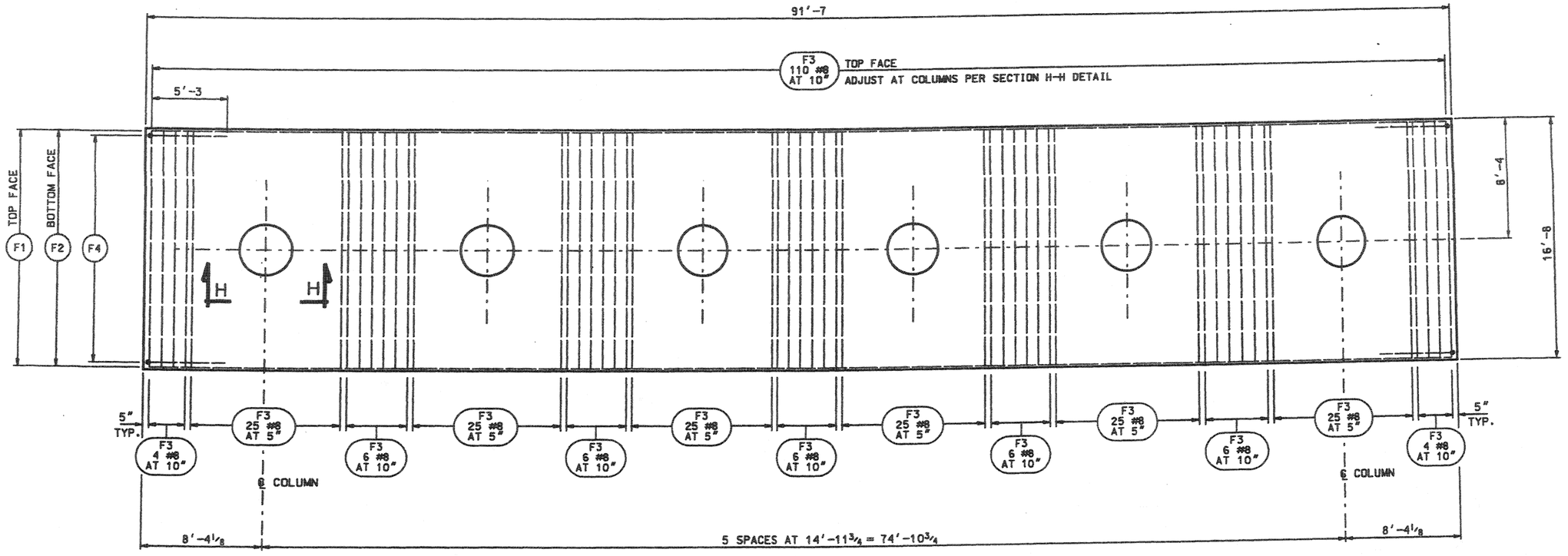

SECTION G-G

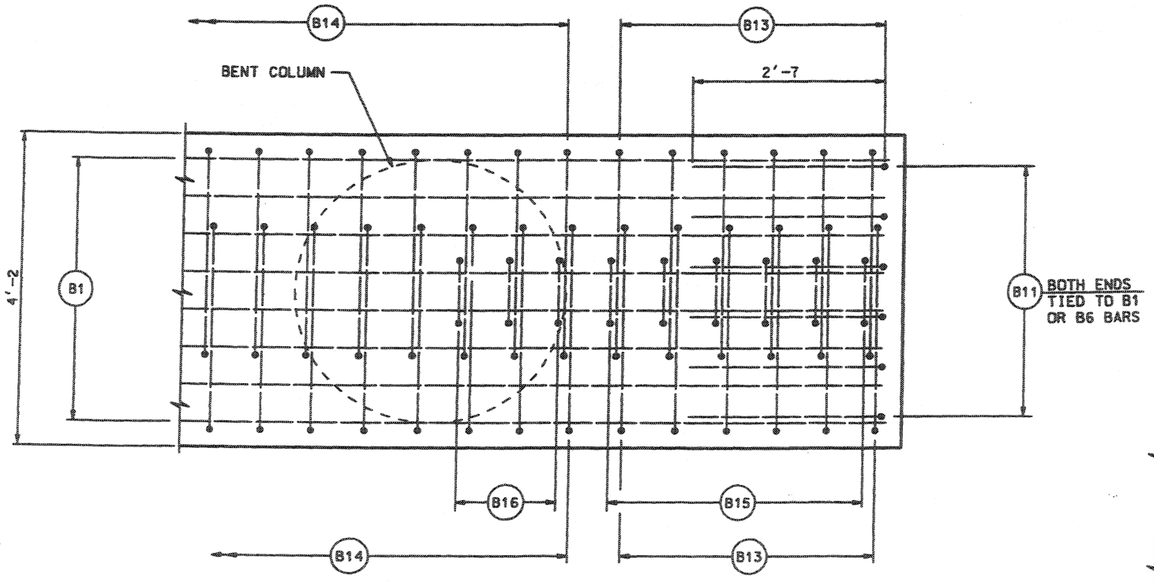

SECTION E-E

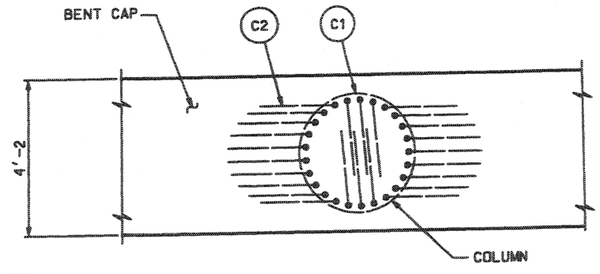

C2 BAR ORIENTATION PLAN

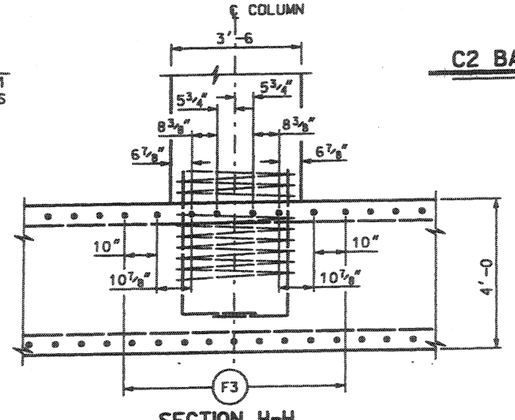

SECTION H-H

STRUCTURAL CONCRETE QUANTITIES	
LOCATION	CU. YDS.
BENT CAP	81.0
COLUMNS	42.5
FOOTING	226.1
TOTAL	349.6

UTAH DEPARTMENT OF TRANSPORTATION
SALT LAKE CITY, UTAH
STRUCTURES DIVISION

DESIGN GG 05/03 CHECK HCB 05/03
DRAWN LM 05/03 CHECK GG 05/03
QUANT. YH 05/03 CHECK GG 05/03

APPROVAL RECOMMENDED — SENIOR DESIGN ENGR. — DATE
APPROVED FOR USE BY UDOT — UDOT BRIDGE ENGR. — DATE

NO.	DATE	BY	REMARKS

REVISIONS

WASHINGTON INTERCHANGE AT RP 13
MP 13 ACCESS ROAD OVER I-15
BENT SECTIONS II

PROJECT NUMBER * SP-15-1(20)13

WASHINGTON COUNTY

C-922 DRG. NO.

SHT. 13 OF 30

D:\DGN Files\NAP\projects\2528_03\Sheet Files\Structural\2528_s922structure2.dgn
25-NOV-2003

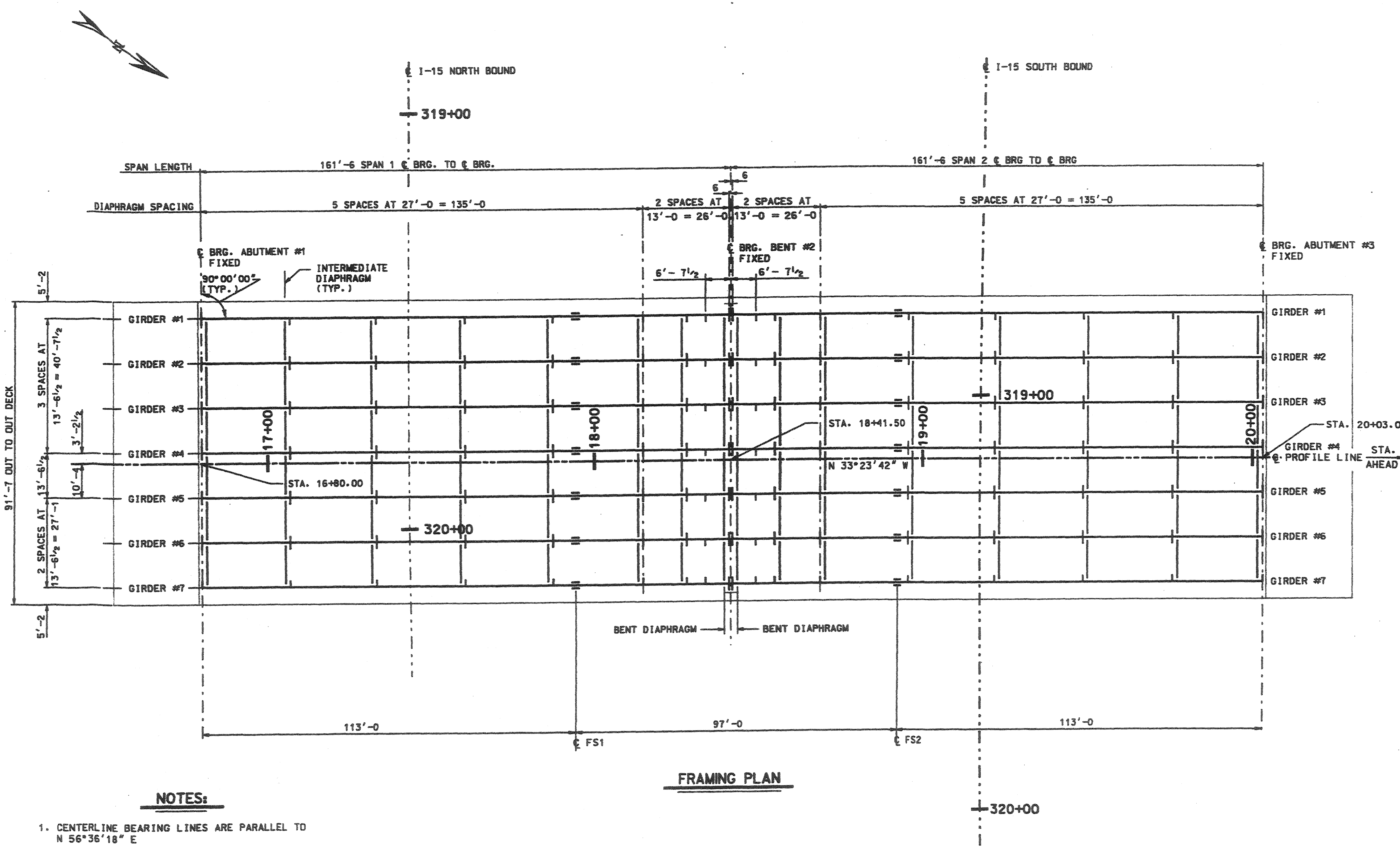

FRAMING PLAN

NOTES:

1. CENTERLINE BEARING LINES ARE PARALLEL TO N 56°36'18" E
2. DIMENSIONS SHOWN ARE PARALLEL OR PERPENDICULAR TO THE GIRDERS UNLESS NOTED OTHERWISE.
3. SEE "DIAPHRAGM DETAILS" SHEET FOR DIAPHRAGM DETAILS.
4. SEE " GIRDER DETAILS I " AND "STEEL DETAILS" SHEETS FOR GIRDER DIMENSIONS AND WELDING DETAILS.

REVISIONS

NO.	DATE	BY	REMARKS

UTAH DEPARTMENT OF TRANSPORTATION
SALT LAKE CITY, UTAH
STRUCTURES DIVISION

DESIGN HCB 1-03 CHECK GG 05/03
DRAWN LM 1-03 CHECK GG 05/03
QUANT. CHECK GG 05/03

WASHINGTON INTERCHANGE AT RP 13
MP 13 ACCESS ROAD OVER I-15
FRAMING PLAN
PROJECT NUMBER * SP-15-1(20)13

WASHINGTON COUNTY
C-922
DRG. NO.
SHT. 14 OF 30

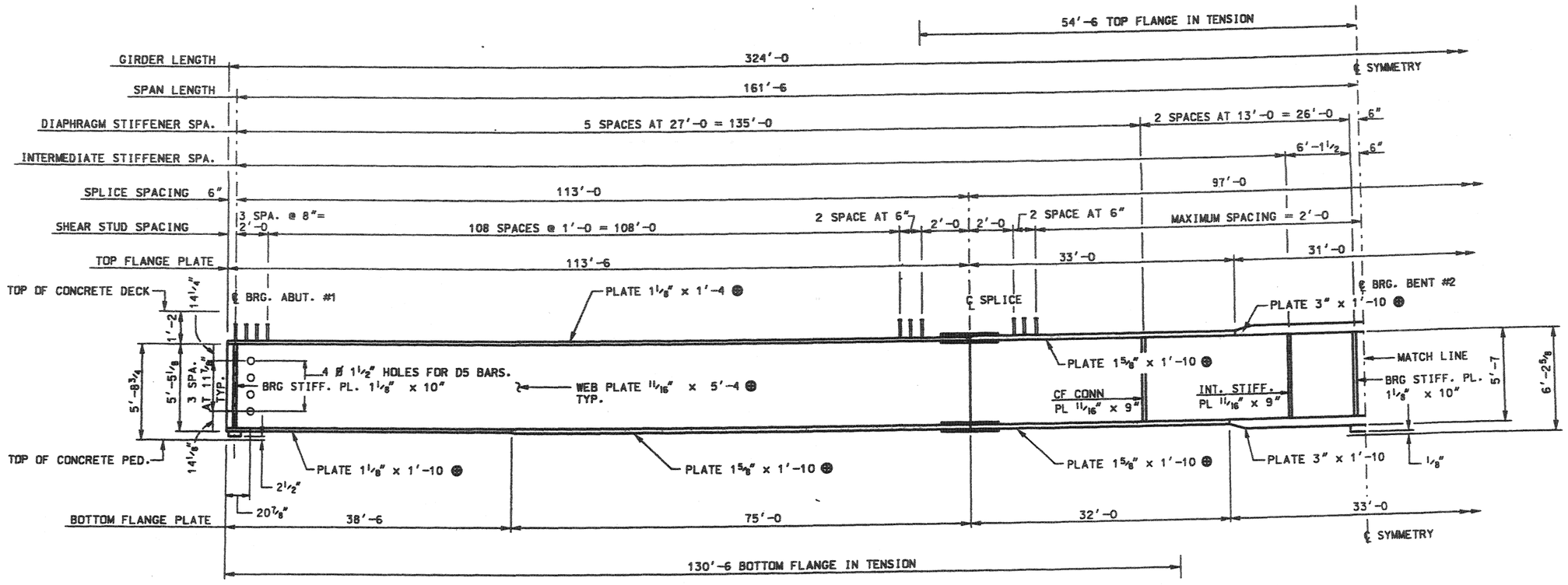

TYPICAL GIRDER

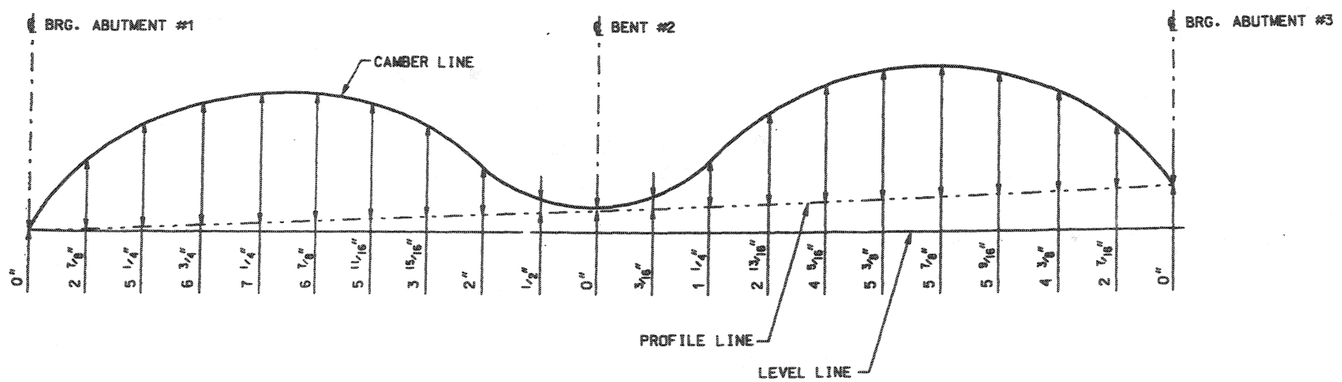

CAMBER DIAGRAM

NOTES:

1. USE STRUCTURAL STEEL CONFORMING TO AASHTO M270 GRADE 50.
2. CHARPY V-NOTCH TOUGHNESS TEST IS REQUIRED ON ALL MAIN LOAD CARRYING MEMBERS SUBJECT TO TENSILE STRESS INDICATED BY ⊕. TEST RESULTS MUST MEET REQUIREMENTS FOR ZONE 2.
3. ALL STIFFENERS ARE PLACED NORMAL TO WEB. BEARING STIFFENERS MUST BE VERTICAL AFTER DEAD LOAD IS APPLIED. CROSS FRAME AND INTERMEDIATE STIFFENERS CAN BE NORMAL TO GRADE.
4. FOR SHEAR STUD DETAILS AND NOTES SEE "SPLICE AND GIRDER DETAILS" SHEET.
5. SEE "SPLICE AND GIRDER DETAILS" SHEET FOR ADDITIONAL NOTES.
6. ALL DIMENSIONS SHOWN ARE HORIZONTAL. THE FABRICATOR MUST TAKE VERTICAL GRADE INTO ACCOUNT.
7. CAMBER ORDINATES ARE FOR DEAD LOAD DEFLECTIONS AT THE TENTH POINTS ALONG THE GIRDER. THE FABRICATOR MUST MAKE CORRECTIONS TO CAMBER BASED ON VERTICAL CURVE.
8. SEE "FRAMING PLAN" SHEET FOR ADDITIONAL GEOMETRIC INFORMATION.
9. SEE "STEEL DETAILS" SHEET FOR ADDITIONAL GIRDER DETAILS.

REVISIONS

NO.	DATE	BY	REMARKS

UTAH DEPARTMENT OF TRANSPORTATION
SALT LAKE CITY, UTAH
STRUCTURES DIVISION

DESIGN HCB 3-03 CHECK GG 05/03
DRAWN LM 3-03 CHECK GG 05/03
QUANT. CHECK GG 05/03

APPROVAL RECOMMEND. — DATE — SENIOR BRIDGE ENGR.
APPROVED FOR USE BY UDOT — DATE — UDOT BRIDGE ENGR.

WASHINGTON INTERCHANGE AT RP 13
MP 13 ACCESS ROAD OVER I-15
GIRDER DETAILS I
PROJECT NUMBER * SP-15-1(20)13

WASHINGTON COUNTY
C-922 DRG. NO.
SHT. 15 OF 30

DGN File:N:\Projects\2838.83\Sheet Files\Structure\2838_s32girdlin.dgn
28-NOV-2003

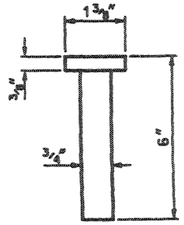

STUD DIMENSIONS

STUD TYPE SHEAR CONNECTORS ARE HEADED ANCHOR STUDS CONFORMING TO THE DIMENSIONS SHOWN ON THE PLANS. THEY WILL BE MANUFACTURED FROM STEEL CONFORMING TO THE REQUIREMENTS OF AASHTO M-169. STUDS ARE AUTOMATICALLY END WELDED IN THE SHOP OR FIELD WITH EQUIPMENT DESIGNED FOR STUD WELDING OPERATIONS. EQUIPMENT CAPACITY WILL BE ADEQUATE FOR THE SIZE OF STUD BEING WELDED.

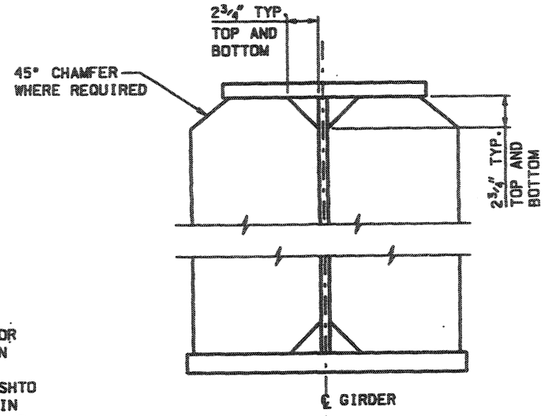

STIFFENER DETAIL

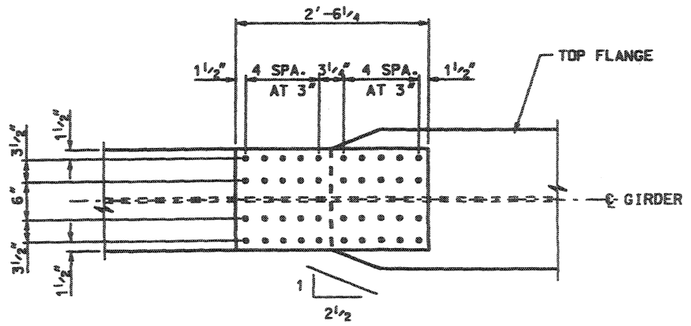

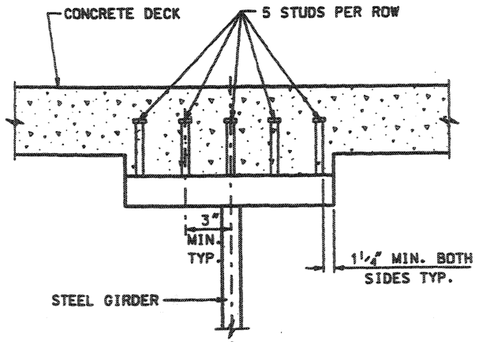

SHEAR CONNECTOR DETAILS

NOTES:

1. USE FLANGE SPLICE STRUCTURAL STEEL CONFORMING TO AASHTO M270 GRADE 50, UNLESS NOTED OTHERWISE.
2. FOR WELDING DETAILS, WELDING SPECIFICATIONS, AND BEARING DETAILS SEE "STEEL DETAILS I " SHEET.
3. CHARPY V-NOTCH TOUGHNESS TEST IS REQUIRED ON ALL SPLICE-PLATES SUBJECT TO TENSILE STRESS INDICATED BY ⊕. TEST RESULTS MUST MEET REQUIREMENTS FOR ZONE 2.
4. FIELD SPLICES ARE NORMAL TO GRADE.
5. USE 7/8" DIA. A325 TYPE 3 BOLTS WITH THREADS EXCLUDED FROM THE SHEAR PLANE AND 15/16" DIA. HOLES. USE A CLASS "B" FAYING SURFACE.
6. SEE "FRAMING PLAN" FOR STIFFENER SPACING AND LOCATION. PLACE ALL STIFFENERS PARALLEL TO ABUTMENT CENTERLINE BEARING.
7. SEE "STEEL DETAILS I" FOR ADDITIONAL GIRDER DETAILS.

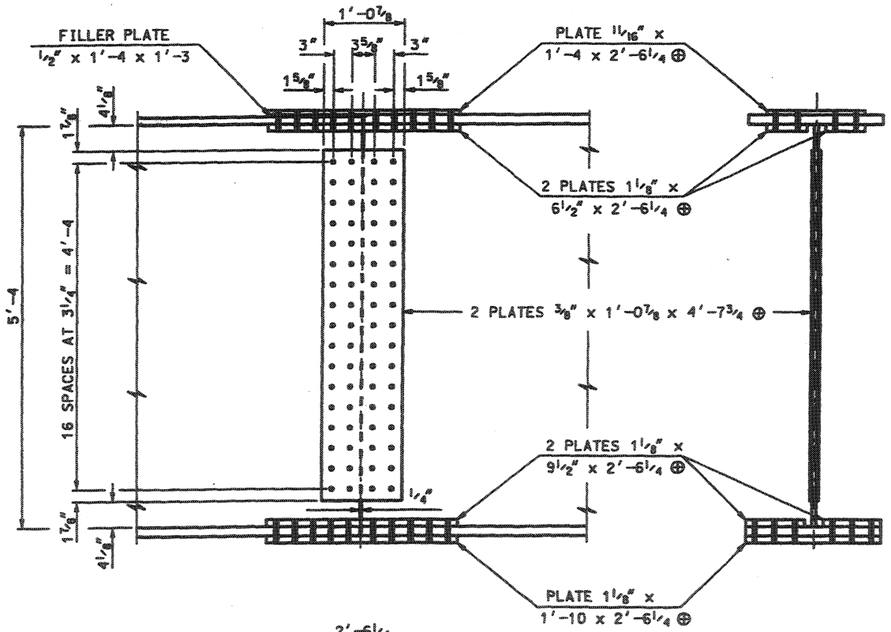

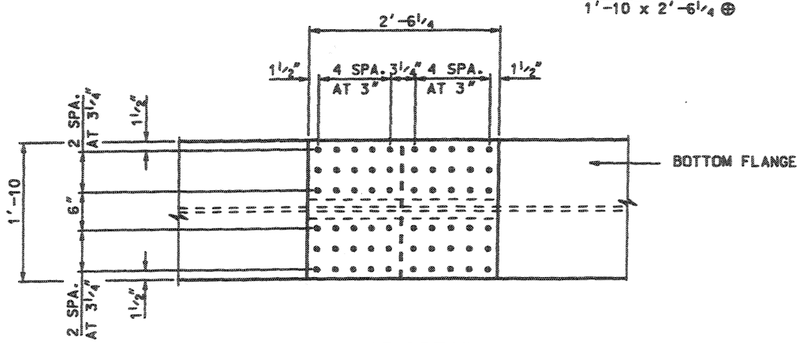

SPLICE DETAIL

(FS1 SHOWN, FS2 SIMILAR)

REVISIONS			
NO.	DATE	BY	REMARKS

UTAH DEPARTMENT OF TRANSPORTATION
SALT LAKE CITY, UTAH
STRUCTURES DIVISION

DESIGN HCB05/03 CHECK GC 05/03
DRAWN LM 05/03 CHECK GC 05/03
QUANT. CHECK GC 05/03

APPROVAL RECOMMENDED: DATE: SENIOR DESIGN ENGR.
APPROVED FOR USE BY UDOT: DATE: DEPT. BRIDGE ENGR.

WASHINGTON INTERCHANGE AT RP 13
MP 13 ACCESS ROAD OVER I-15
SPLICE AND GIRDER DETAILS

PROJECT NUMBER * SP-15-1(20)13

WASHINGTON COUNTY

C-922 DRG. NO.

SHT. 16 OF 30

DGN File:N:\Projects\2928.03\Sheet Files\Structures\2928_s922dsn02.dgn
DV-2883

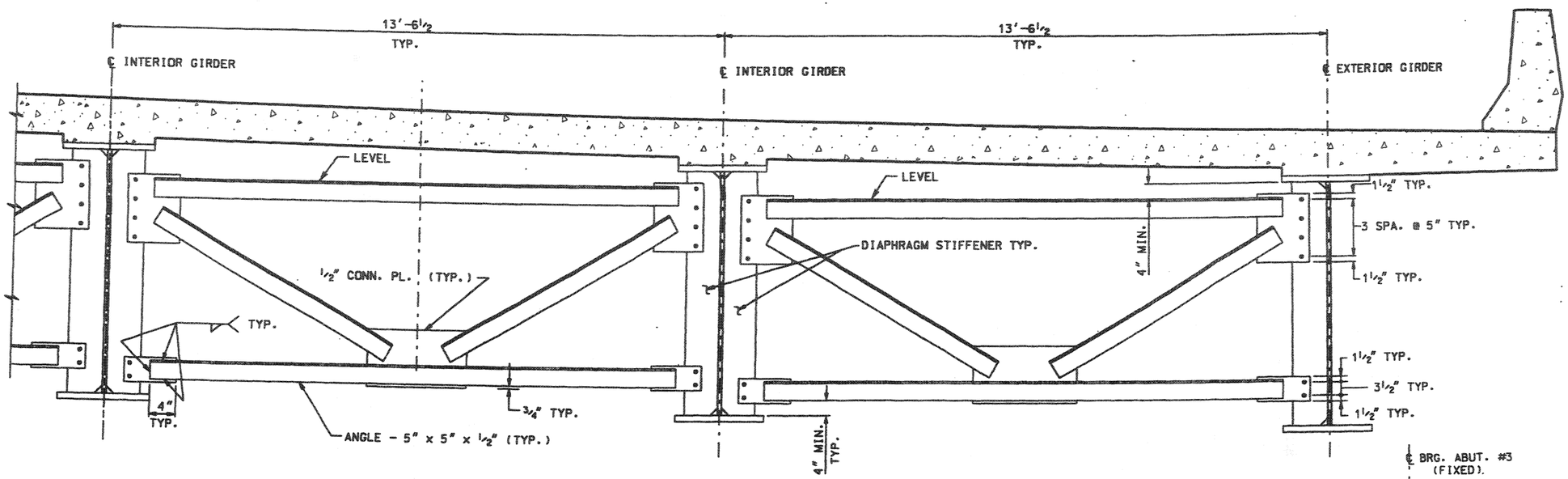

INTERMEDIATE AND END DIAPHRAGM ELEVATION

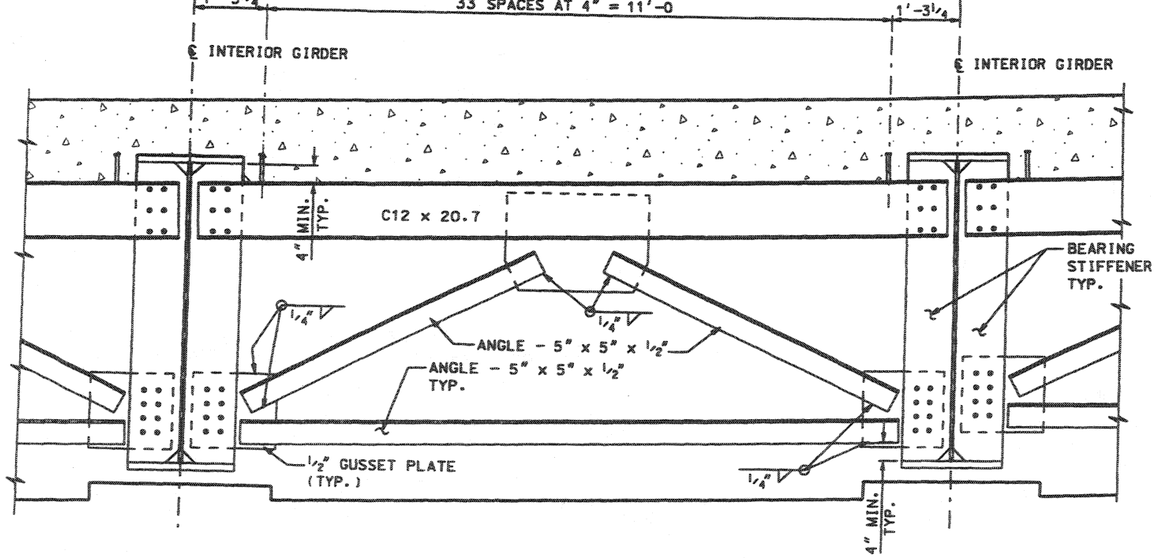

BENT DIAPHRAGM ELEVATION

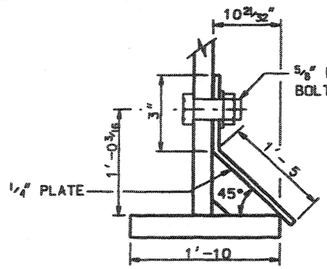

TYP. COVER SECTION

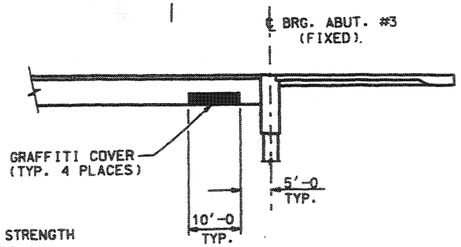

GRAFFITI COVER LOCATION

(ABUTMENT # 1 SIMILAR)

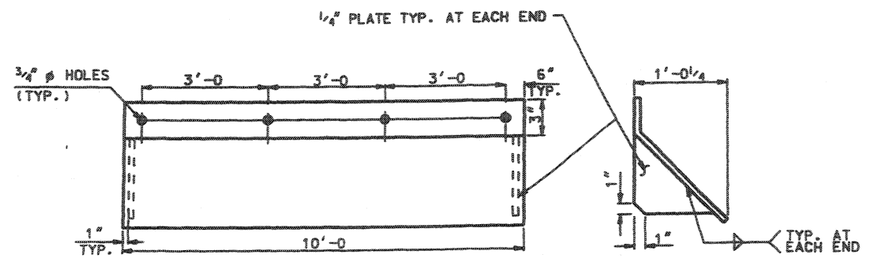

COVER ELEVATION

COVER END VIEW

GRAFFITI PROTECTION COVER DETAILS

NOTES:

1. USE 7/8" DIA. HIGH STRENGTH STEEL BOLTS CONFORMING TO ASTM A325 TYPE 3 FOR ALL FIELD CONNECTIONS.
2. 1 1/16" DIA. HOLE IN CONNECTING PLATE 15/16" DIA. HOLE CONNECTING MEMBER.
3. ALL STIFFENERS PLACED NORMAL TO THE WEB.

REVISIONS			
NO.	DATE	BY	REMARKS

UTAH DEPARTMENT OF TRANSPORTATION
SALT LAKE CITY, UTAH
STRUCTURES DIVISION

DESIGN GG 05/03 CHECK HCB 05/03
DRAWN LM 05/03 CHECK GG 05/03
QUANT. CHECK GG 05/03

APPROVAL RECOMM. DATE SENIOR VERSION ENGR.
APPROVED FOR USE BY UDOT DATE UDOT BRIDGE ENGR.

WASHINGTON INTERCHANGE AT RP 13
MP 13 ACCESS ROAD OVER I-15
DIAPHRAGM DETAILS
PROJECT NUMBER * SP-15-1(20)13

WASHINGTON COUNTY
C-922 DRG. NO.
SHT. 17 OF 30

DGN File: N:\Projects\2928.83\Sheet_Files\Structures\2928_s922dtl01.dgn
28-NOV-2003

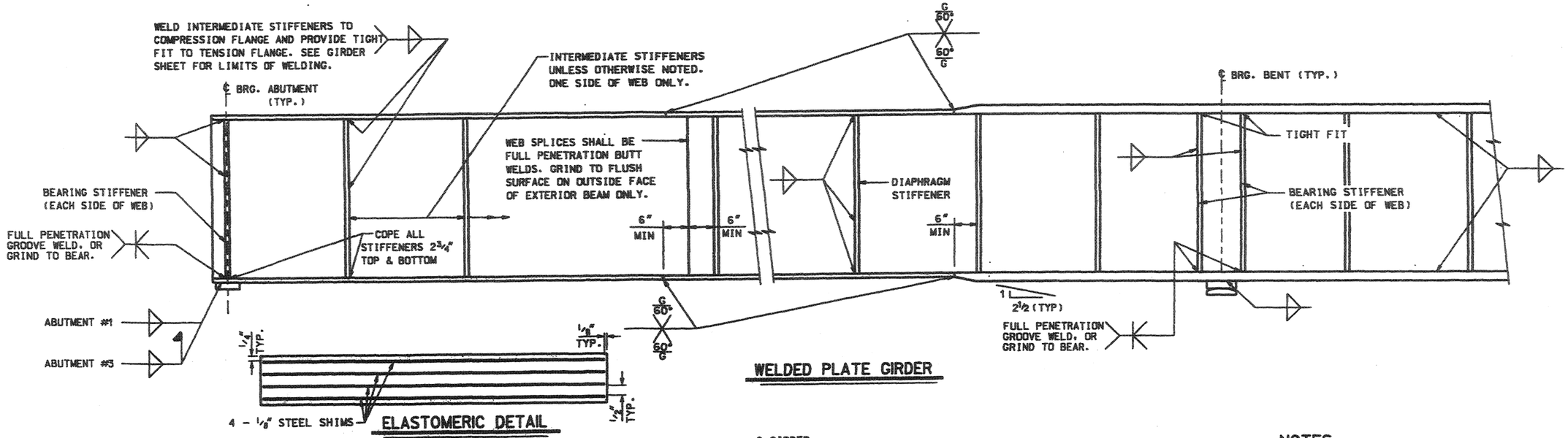

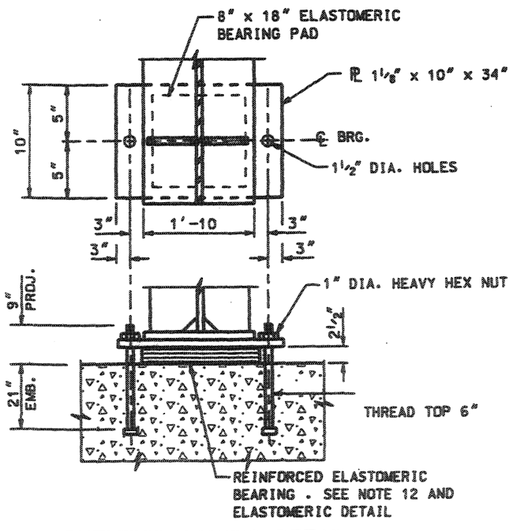

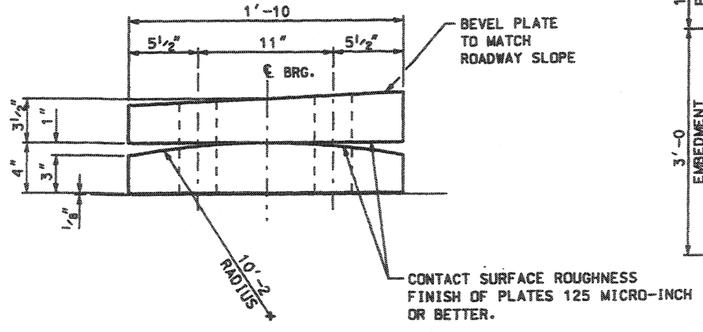

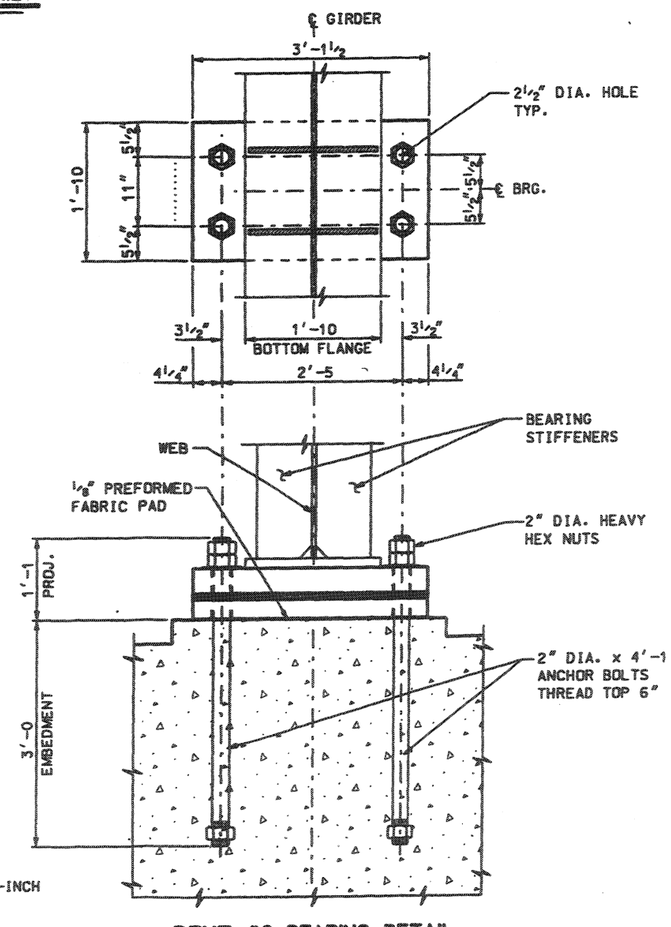

NOTES:

1. WELDING. WELDER QUALIFICATIONS. PREQUALIFICATION OF WELD DETAILS AND INSPECTION OF WELDS MUST CONFORM TO THE REQUIREMENTS OF THE ANSI/AASHTO/AWS BRIDGE WELDING CODE D1.5.
2. THE METHODS OF JOINT PREPARATION FOR WELDING SHOWN ON THE PLANS ARE BASED ON THE USE OF MANUAL SHIELDED METAL-ARC WELDING. THE USE OF THIS OR ANY OTHER WELDING PROCESS WILL BE SATISFACTORY ONLY AFTER THE WELDING PROCEDURE HAS BEEN SUBMITTED BY CONTRACTOR AND APPROVED BY THE ENGINEER.
3. ALL STRENGTH FILLET WELDS ARE MINIMUM SIZED WELDS REQUIRED BY ANSI/AASHTO/AWS BRIDGE WELDING CODE D1.5 FOR THE THICKNESS OF THE MATERIAL JOINED UNLESS OTHERWISE SPECIFIED.
4. THE MINIMUM WELD SIZE FOR ANY CONNECTION IS ¼".
5. DIMENSIONS SHOWN ON THE PLANS ASSUME THE AMBIENT TEMPERATURE OF THE GIRDER TO BE 70°F. LENGTH USED IN FABRICATION MUST BE CORRECTED AT THE RATE OF ±1/16" PER EACH 100'-0 OF LENGTH FOR EVERY 10°F DIFFERENCE IN TEMPERATURE TO ALLOW FOR EXPANSION AND CONTRACTION.
6. FIELD WELDING TO GIRDERS IS NOT PERMITTED. UNLESS OTHERWISE NOTED.
7. SEE "ABUTMENT PLAN" SHEET FOR BEARING SEAT ELEVATIONS.
8. SEE "FRAMING PLAN" SHEET FOR INTERMEDIATE STIFFENER LOCATION.
9. SEE "GIRDER DETAILS 1 " SHEET FOR STIFFENER SIZES. AND ADDITIONAL NOTES.
10. USE ANCHOR BOLT MATERIAL CONFORMING TO ASTM A449.
11. GALVANIZE NUTS. WASHERS. AND ANCHOR BOLTS IN ACCORDANCE WITH AASHTO M232 (ASTM A153). ALL GALVANIZED STEEL THREADS WILL BE FREE FROM DEFECTS ALLOWING NUTS TO BE FREE RUNNING BY HAND FOR THE ENTIRE LENGTH OF THE THREADS. TREAT GALVANIZED SURFACES TO RECIEVE PAINT.
12. REINFORCED ELASTOMERIC BEARING PAD AT ABUTMENTS CONSISTS OF 3 – ½" ELASTOMERIC PLYS. 2 – ¼" ELASTOMERIC COVER PLYS. AND 4 – ⅛" STEEL SHIMS FORM TOTAL THICKNESS OF 2½". USE 50 DUROMETER HARDNESS ELASTOMERIC BEARING PADS.

QUANTITIES	
STRUCTURAL STEEL	969.454 LBS

NO.	DATE	BY	REVISIONS REMARKS

UTAH DEPARTMENT OF TRANSPORTATION
SALT LAKE CITY, UTAH
STRUCTURES DIVISION

DESIGN DH 05/03 CHECK HCB 05/03
DRAWN LM 05/03 CHECK GG 05/03
QUANT. CHECK GG 05/03
APPROVAL RECOMM. — SENIOR DESIGN ENGR. — DATE
APPROVED FOR USE — DEPT. BRIDGE ENGR. — DATE

WASHINGTON INTERCHANGE AT RP 13
MP 13 ACCESS ROAD OVER I-15
STEEL DETAILS
PROJECT NUMBER * SP-15-1(20)13

WASHINGTON COUNTY
C-922 DRG. NO.
SHT. 18 OF 30

DGN: Files\INProjects\2928.03\Sheet Files\Structures\2928_c922steel.dgn

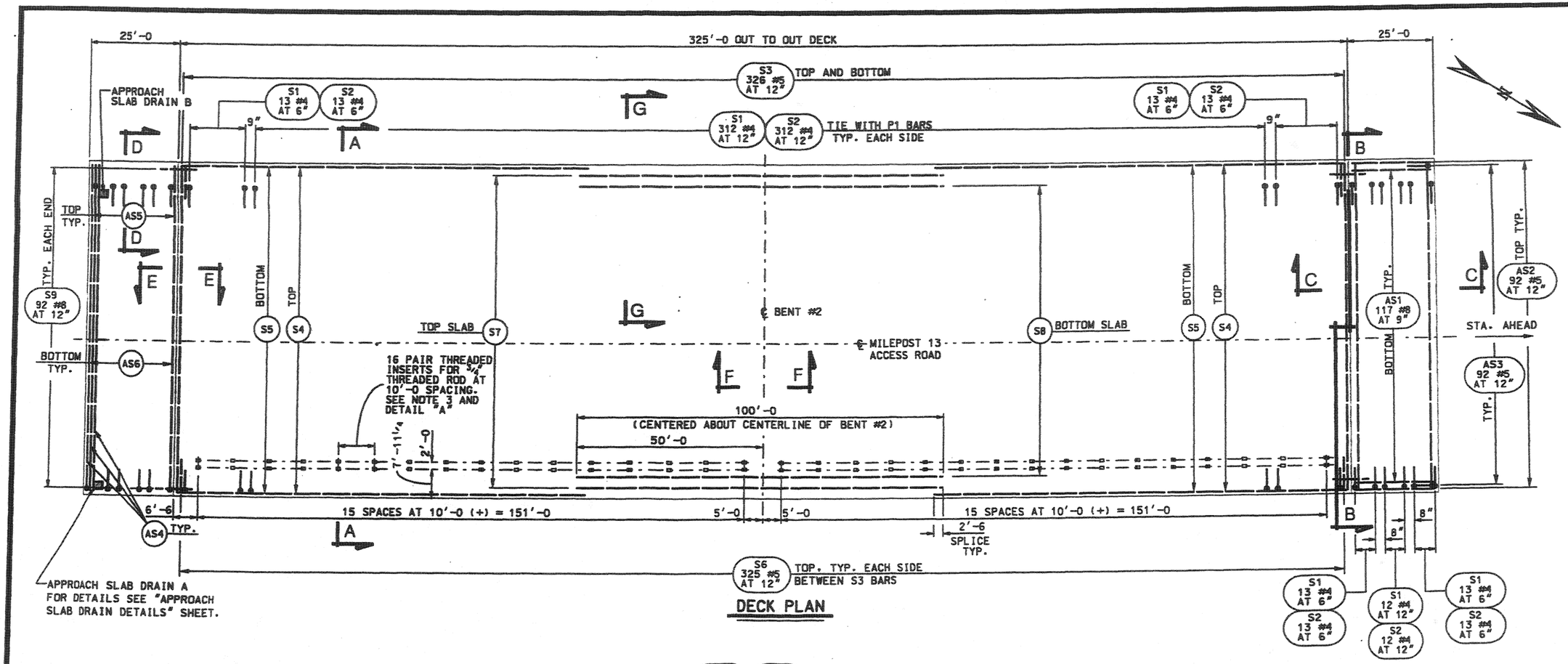

DECK PLAN

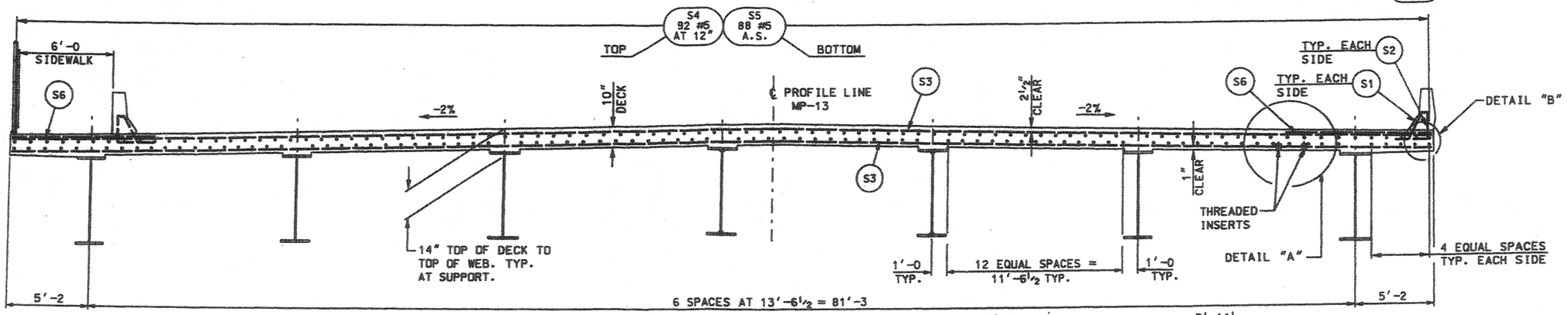

SECTION A-A

NOTES:

1. STAY-IN-PLACE DECK FORMS ARE NOT PERMITTED.
2. SEE "DECK SECTIONS I SHEET " FOR SECTIONS B-B, C-C, D-D, E-E, F-F AND DETAIL "B".
3. INSERTS ARE INCLUDED IN STRUCTURAL CONCRETE PAYMENT.
4. SEE "DECK SECTIONS II" SHEET FOR SECTION G-G AND DECK PLACING SEQUENCE.

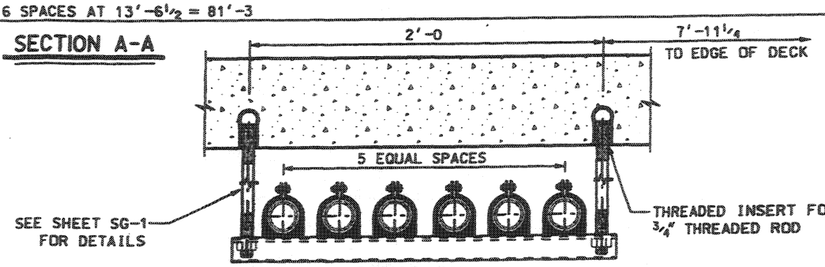

DETAIL "A"

STRUCTURAL CONCRETE QUANTITIES

LOCATION	CU. YDS.
DECK SLAB	944.5
APPROACH SLABS	195.0
END DIAPHRAGMS	117.6
TOTAL	1257.1

REVISIONS

NO.	DATE	BY	REMARKS

UTAH DEPARTMENT OF TRANSPORTATION
SALT LAKE CITY, UTAH
STRUCTURES DIVISION

DESIGN DH 05/03 CHECK HCB 05/03
DRAWN LM 05/03 CHECK GG 05/03
QUANT. VH 05/03 CHECK GG 05/03

APPROVAL RECOMMD. ____ DATE ____ SENIOR DESIGN ENGR. ____
APPROVED FOR CONST. ____ DATE ____ CHIEF ENGINEER ____

WASHINGTON INTERCHANGE AT RP 13
MP 13 ACCESS ROAD OVER I-15
DECK PLAN AND SECTIONS

PROJECT NUMBER * SP-15-1(20)13

WASHINGTON COUNTY

C-922 DRG. NO.

SHT. 19 OF 30

25-NOV-2003
DGN File:N:\Projects\C922\dgn\Sheet Files\Structures\C922_e322deck.dgn

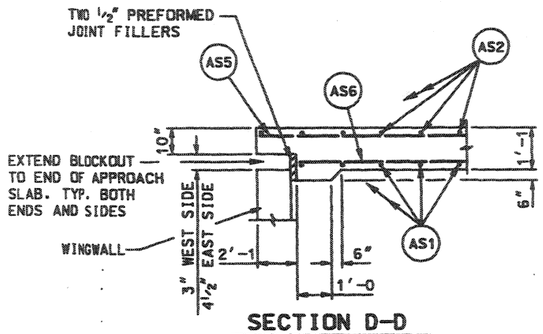

SECTION D-D

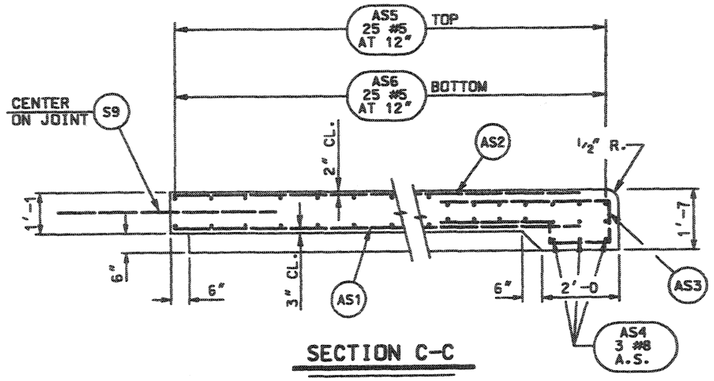

SECTION C-C

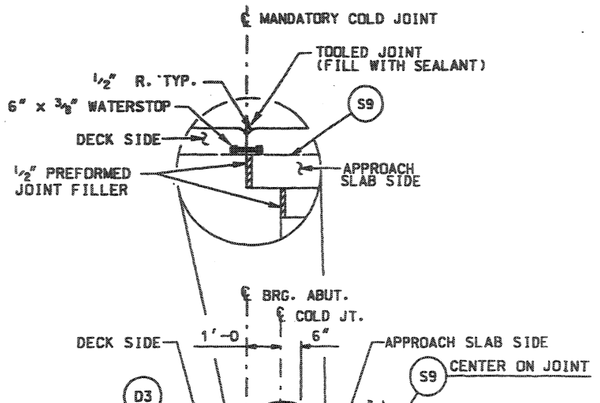

SECTION E-E

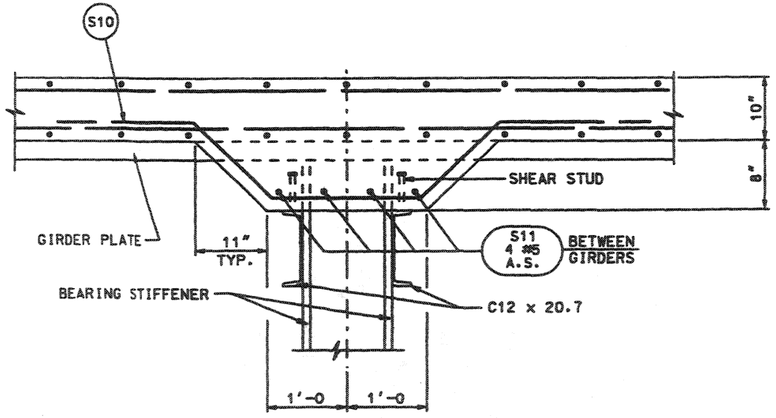

SECTION F-F

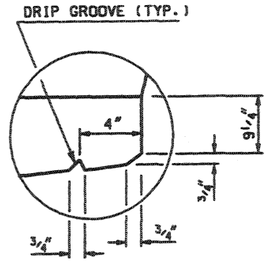

DETAIL "B"

(TYPICAL ALL SIDES)

NOTES:

1. TURN EACH END OF WATERSTOP UP 3" INTO PARAPET.
2. SEE "DECK PLAN AND SECTIONS" SHEET FOR LOCATION OF SECTIONS AND DETAILS.
3. PVC PIPES ARE INCLUDED IN STRUCTURAL CONCRETE PAYMENT.

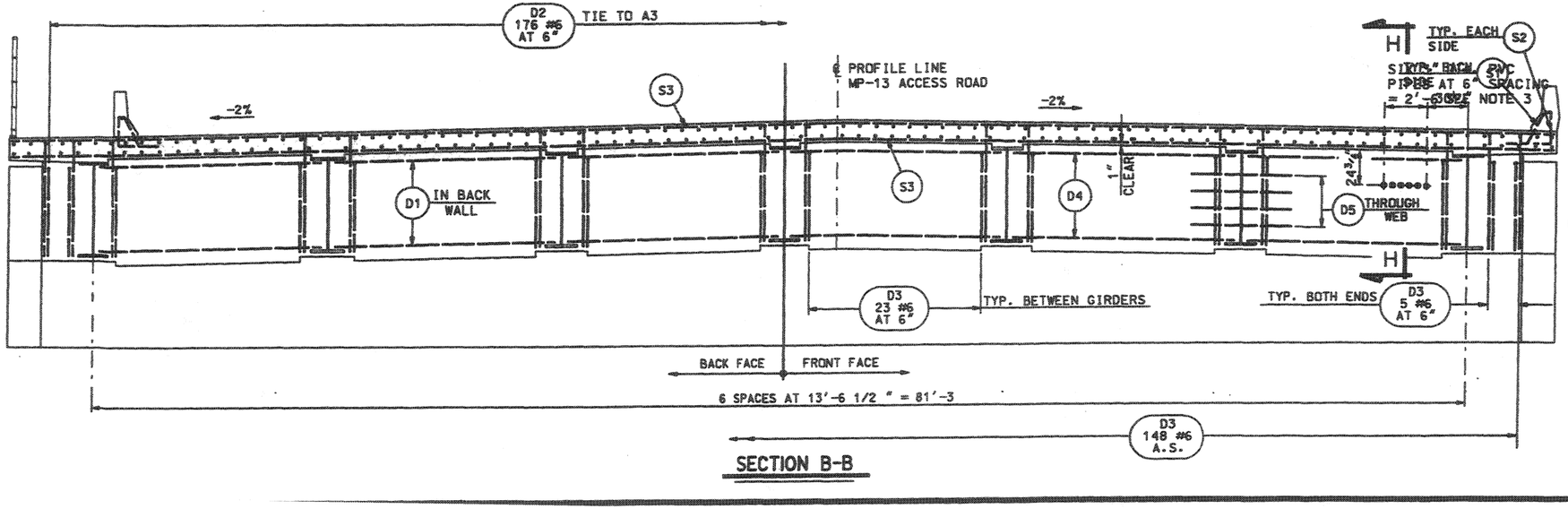

SECTION B-B

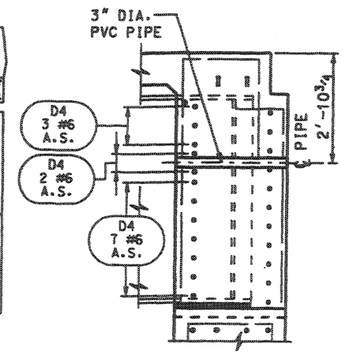

SECTION H-H

BETWEEN GIRDERS #6 AND #7 ONLY

UTAH DEPARTMENT OF TRANSPORTATION
SALT LAKE CITY, UTAH
STRUCTURES DIVISION

NO.	DATE	BY	REMARKS
			REVISIONS

DESIGN OH 5/03 CHECK HCB 5/03
DRAWN LM 5/03 CHECK GG 5/03
QUANT. CHECK

APPROVAL RECOMM. SENIOR DESIGN ENGR. DATE
APPROVED FOR USE BY UDOT BRIDGE ENGR. DATE

WASHINGTON INTERCHANGE AT RP 13
MP 13 ACCESS ROAD OVER I-15
DECK SECTIONS I

PROJECT NUMBER * SP-15-1(20)13

WASHINGTON COUNTY

C-922 DRG. NO.

SHT. 20 OF 30

DGN: Files:NVProjects\2928.dgn\Sheet Files\Structures\2928_s922deckcon1.dgn
LNOV-2003

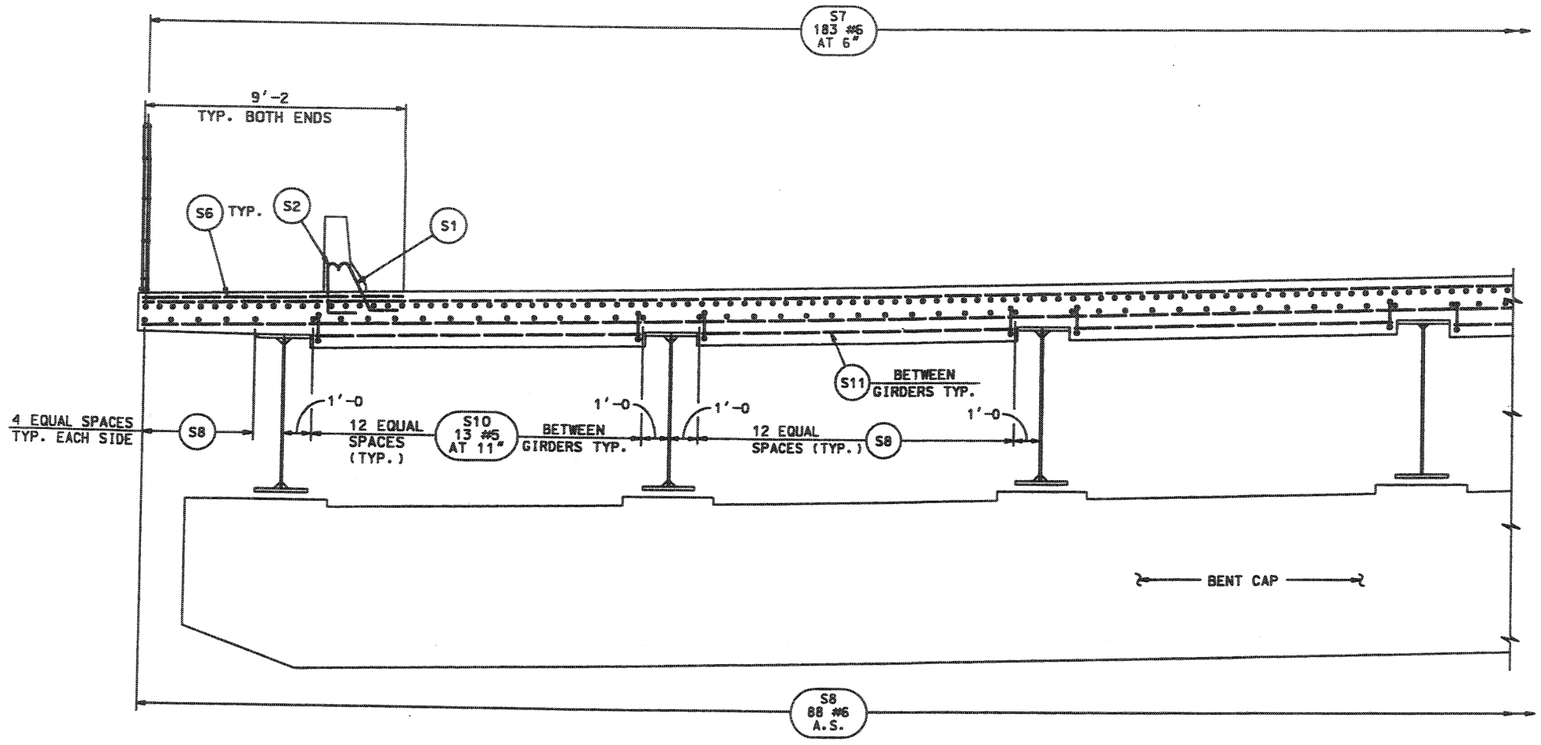

SECTION G-G

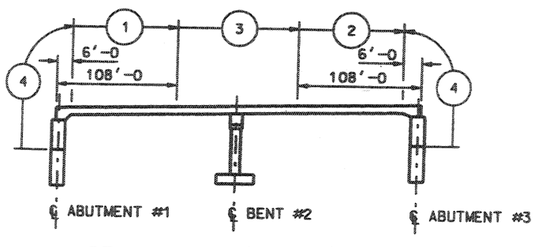

DECK PLACING SEQUENCE

1. NUMBER DESIGNATES PLACING SEQUENCE.
2. ARROW DESIGNATES REQUIRED DIRECTION OF PLACEMENT.
3. ALTERNATE POUR SEQUENCES MUST BE APPROVED BY THE ENGINEER.

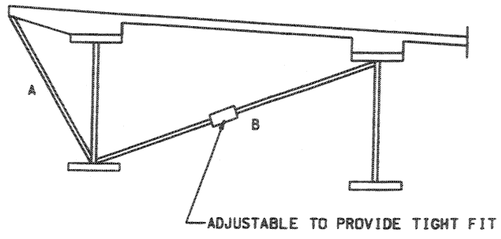

OVERHANG BRACING DETAIL

DURING PLACEMENT OF DECK, OVERHANG WILL BE BRACED AS SHOWN. MEMBER "B" SHALL BE CAPABLE OF DEVELOPING THE FORCES INDUCED BY MEMBER "A". SHOP DRAWINGS ARE REQUIRED.

REVISIONS			
NO.	DATE	BY	REMARKS

UTAH DEPARTMENT OF TRANSPORTATION
SALT LAKE CITY, UTAH
STRUCTURES DIVISION

DESIGN DH HCB CHECK HCB 5/03
DRAWN LM 5/03 CHECK GG 5/03
QUANT. CHECK

APPROVAL RECOMM. DATE SENIOR DESIGN ENGR.
APPROVED FOR USE BY UDOT DATE UDOT BRIDGE ENGR.

WASHINGTON INTERCHANGE AT RP 13
MP 13 ACCESS ROAD OVER I-15
DECK SECTIONS II

PROJECT NUMBER * SP-15-1(20)13

WASHINGTON COUNTY
C-922 DRG. NO.
SHT. 21 OF 30

DGN File:N:\Projects\2528.03\Sheet Files\Structural\2528_s922decksec2.dgn
24-NOV-2003

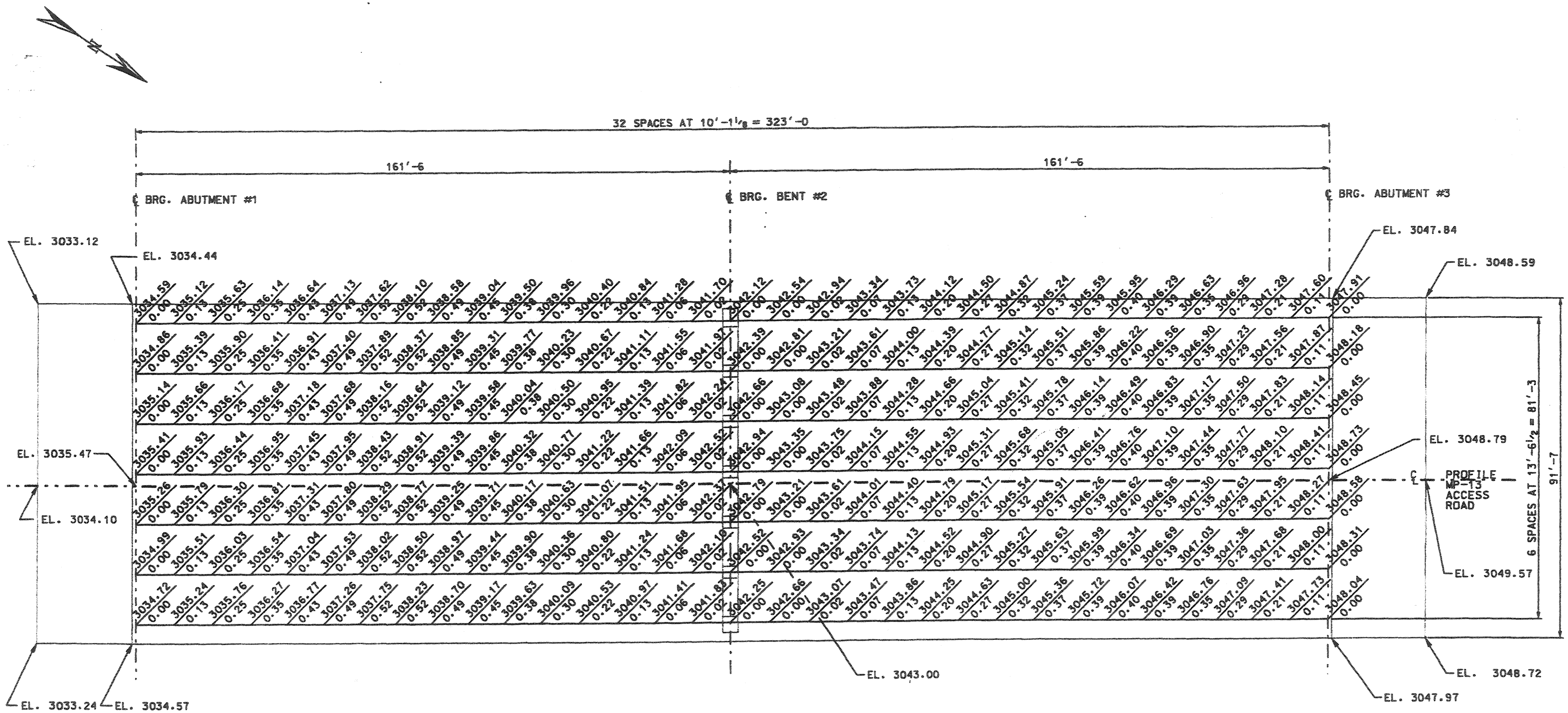

SCREED ELEVATIONS

NOTES:

1. FIGURES ABOVE THE LINE ARE TOP OF CONCRETE ELEVATIONS. FIGURES BELOW THE LINE ARE DEAD LOAD DEFLECTIONS OF THE DECK AND ARE TO BE ADDED TO THE TOP OF CONCRETE ELEVATIONS TO OBTAIN SCREED ELEVATIONS. DATUM ELEVATION = 3000.00'
2. ALL DIMENSIONS SHOWN ARE IN FEET AND INCHES. ALL ELEVATIONS AND DEAD LOAD DEFLECTIONS ARE SHOWN IN FEET.

NO.	DATE	BY	REVISIONS

UTAH DEPARTMENT OF TRANSPORTATION
SALT LAKE CITY, UTAH
STRUCTURES DIVISION

DESIGN GG 05/03 CHECK HCB 05/03
DRAWN VH 05/03 CHECK GG 05/03

WASHINGTON INTERCHANGE AT RP 13
MP 13 ACCESS ROAD OVER I-15
SCREED ELEVATIONS
PROJECT NUMBER * SP-15-1(20)13

WASHINGTON COUNTY
C-922 DRG. NO.
SHT. 22 OF 30

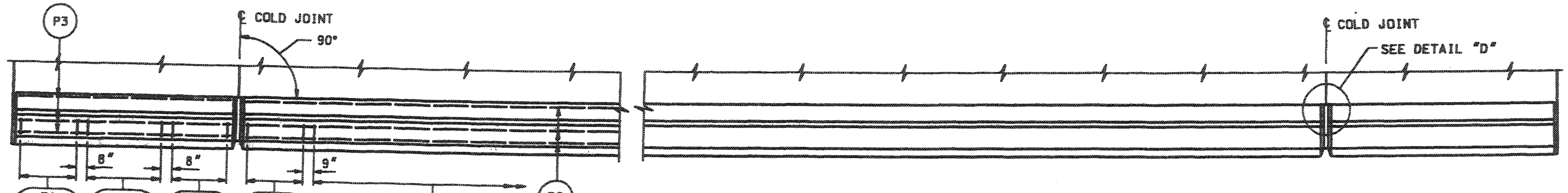

PLAN

SYMMETRICAL ABOUT CENTERLINE BRG. BENT #2

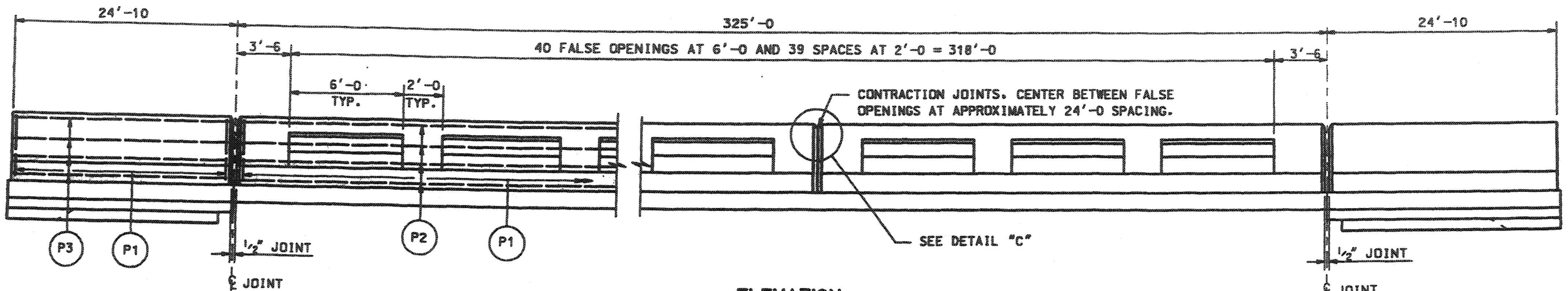

ELEVATION

(ALL DIMENSIONS SHOWN ARE ALONG EDGE OF DECK)

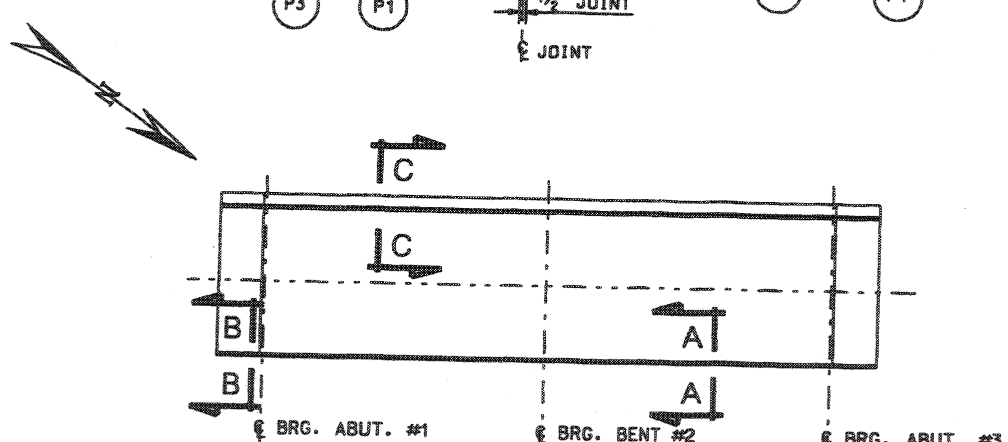

KEY PLAN

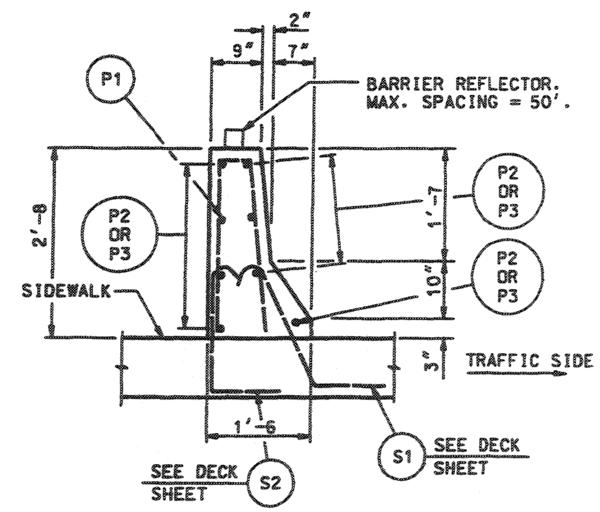

SECTION C-C

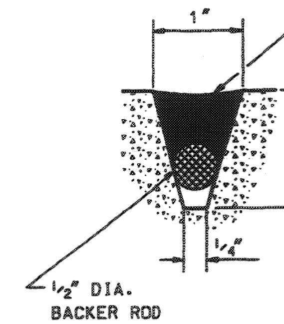

DETAIL "C"

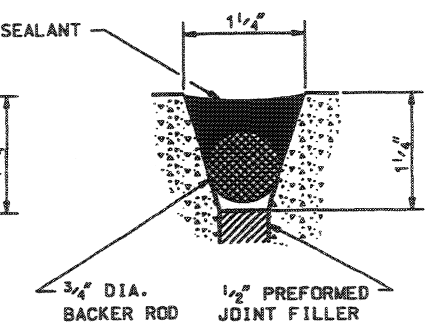

DETAIL "D"

GENERAL NOTES

1. ALTERNATE ALL REINFORCING STEEL SPLICES.
2. USE 1 1/2" MIN. COVER TO REINFORCING STEEL UNLESS NOTED OTHERWISE.
3. LOCATE DRAWING NUMBER ON RIGHT-HAND SIDE OF APPROACH PARAPET.
4. PLACE CONTRACTION JOINT ON SIDES AND TOP OF PARAPET.
5. EXTEND SEALANT AND FOAM BACKER ROD FROM DECK TO TOP OF PARAPET ON THE INSIDE PARAPET FACE, AND ACROSS TOP OF PARAPET.

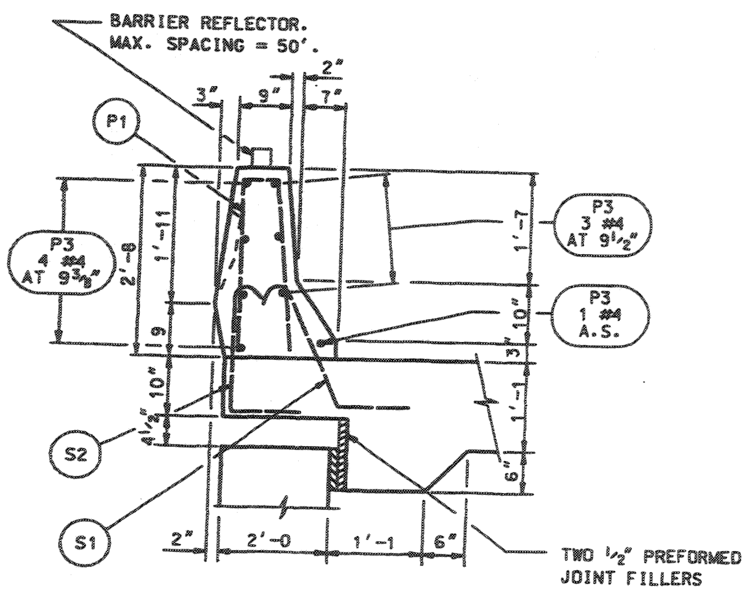

SECTION B-B

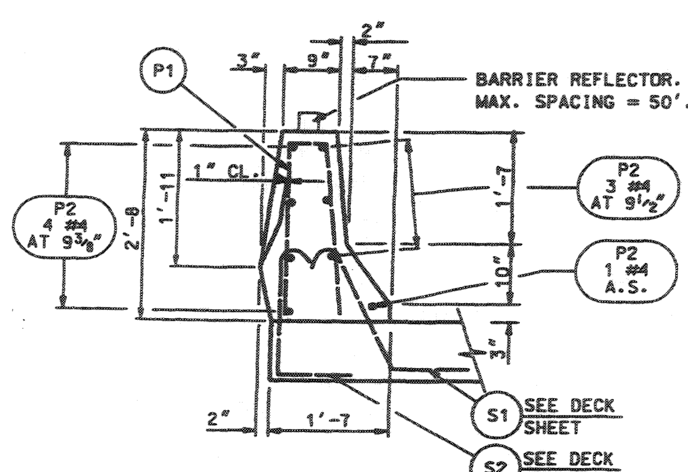

SECTION A-A

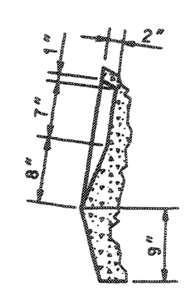

FALSE OPENING

(PARTIAL SECTION)

STRUCTURAL CONCRETE QUANTITIES FOR ALL PARAPETS 80.1 CU. YDS.

UTAH DEPARTMENT OF TRANSPORTATION SALT LAKE CITY, UTAH STRUCTURES DIVISION	DESIGN DH 05/03	CHECK RH 05/03	
	DRAWN VH 05/03	CHECK GG 05/03	
	QUANT. VH 05/03	CHECK GG 05/03	
APPROVAL RECOM. DATE	SENIOR DESIGN ENGR.		
APPROVED FOR USE BY UDOT DATE	UDOT BRIDGE ENGR.		
NO.	DATE	BY	REVISIONS / REMARKS

WASHINGTON INTERCHANGE AT RP 13
MP 13 ACCESS ROAD OVER I-15

PARAPET DETAILS

PROJECT NUMBER * SP-15-1(20)13

WASHINGTON COUNTY

C-922 DRG. NO.

SHT. 23 OF 30

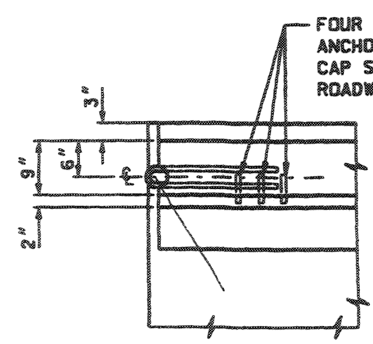

PLAN

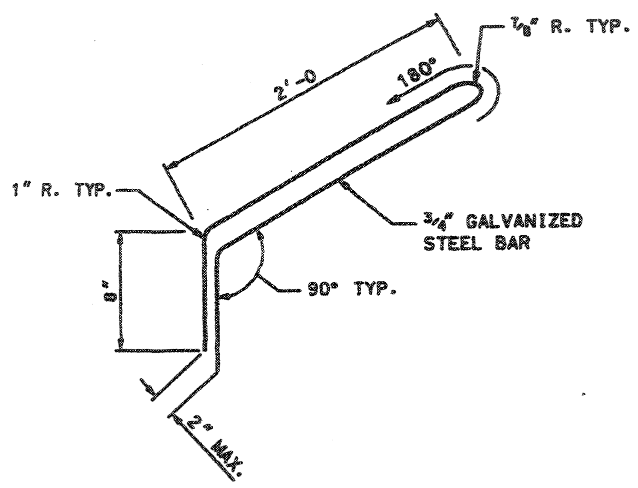

CONNECTION LOOP DETAIL

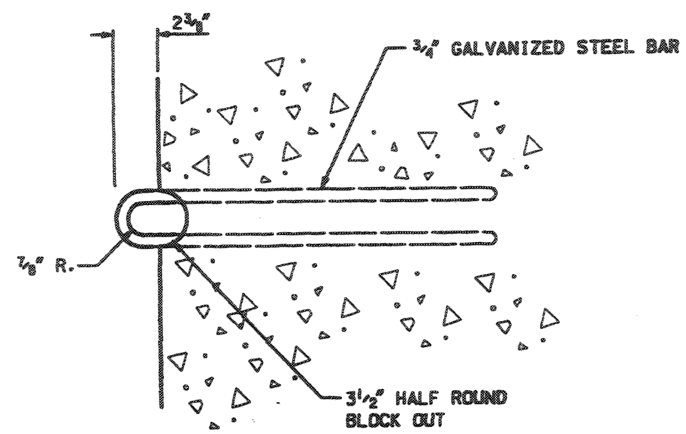

CONNECTION END DETAIL

NOTES:

1. INSTALL BOTH CONNECTION LOOPS AND THREADED ANCHORS AT ALL PARAPET ENDS.
2. CONNECTION LOOPS NOT INCLUDED IN REINFORCING STEEL SCHEDULE.
3. SEE STANDARD DRAWING BA 4A FOR GAURD RAIL CONNECTION DETAILS.

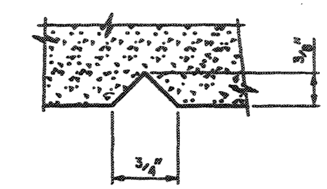

TYPICAL SECTION
THRU STRUCTURE NUMBER

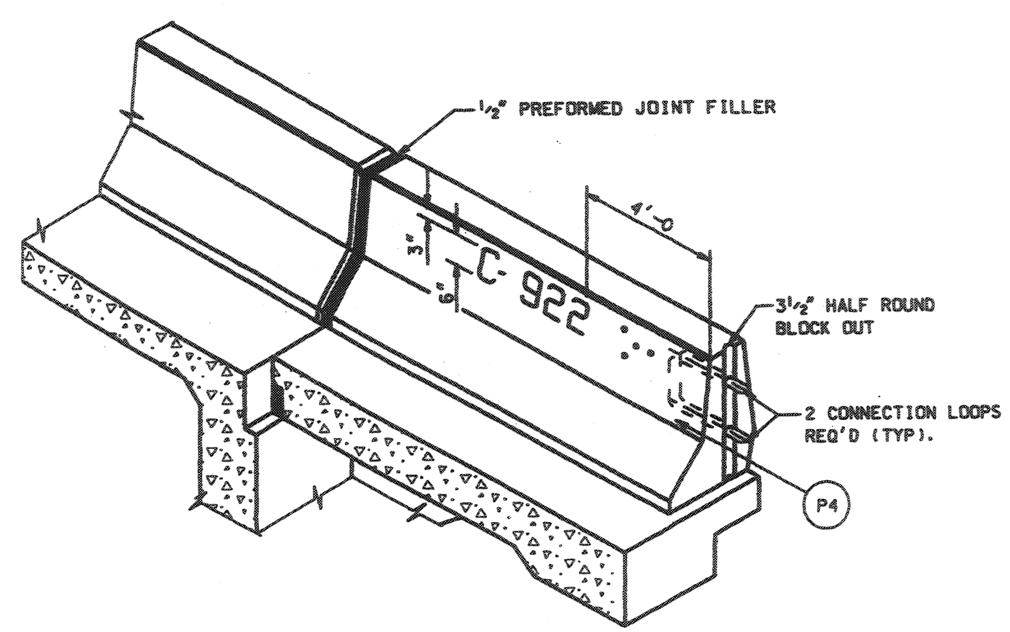

STANDARD END ISOMETRIC

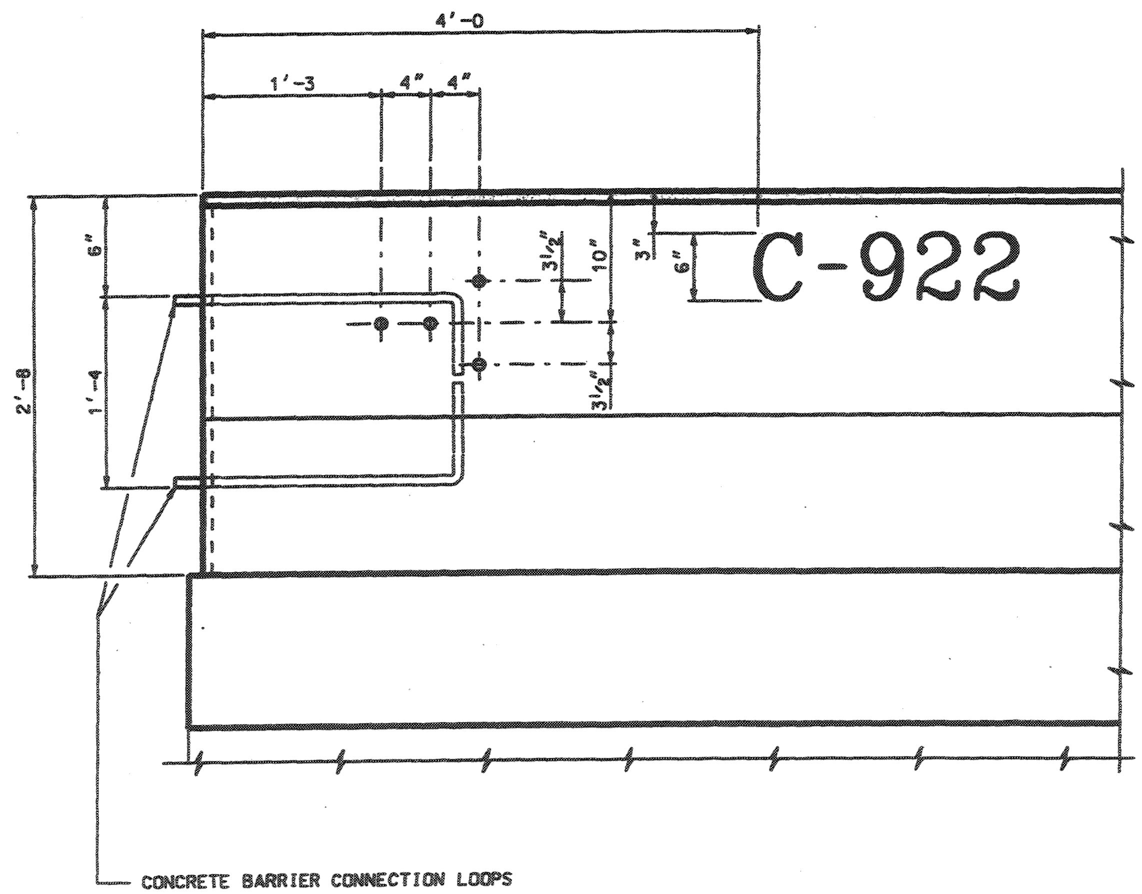

PARAPET END DETAIL

NO.	DATE	BY	REMARKS

REVISIONS

UTAH DEPARTMENT OF TRANSPORTATION
SALT LAKE CITY, UTAH
STRUCTURES DIVISION

DESIGN GG 9/03 CHECK HCB 9/03
DRAWN LM 9/03 CHECK GG 9/03
QUANT. CHECK

APPROVAL RECOMM. DATE SENIOR DESIGN ENGR.
APPROVED FOR USE BY UDOT DATE UDOT BRIDGE ENGR.

WASHINGTON INTERCHANGE AT RP 13
MP 13 ACCESS ROAD OVER I-15
PARAPET END DETAILS

PROJECT NUMBER ✱ SP-15-1(20)13

WASHINGTON
COUNTY
C-922
DRG. NO.
SHT. 24 OF 30

DGN File:N:\Projects\2528.03\Sheet-Files\Structures\2528_c922pard.dgn
M-2693

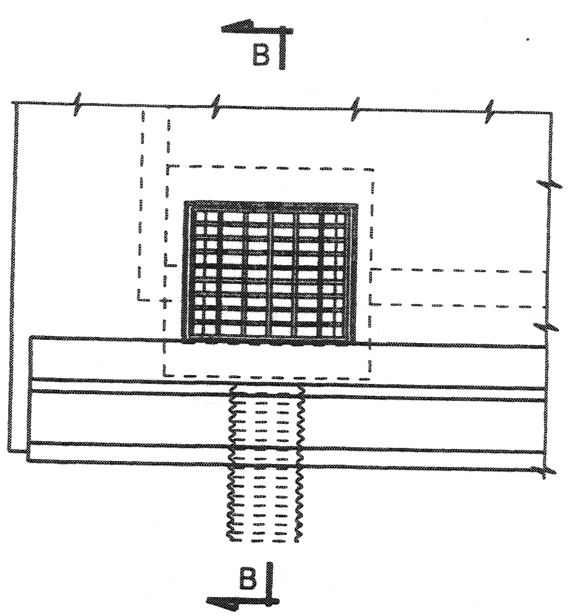

APPROACH SLAB DRAIN - A PLAN

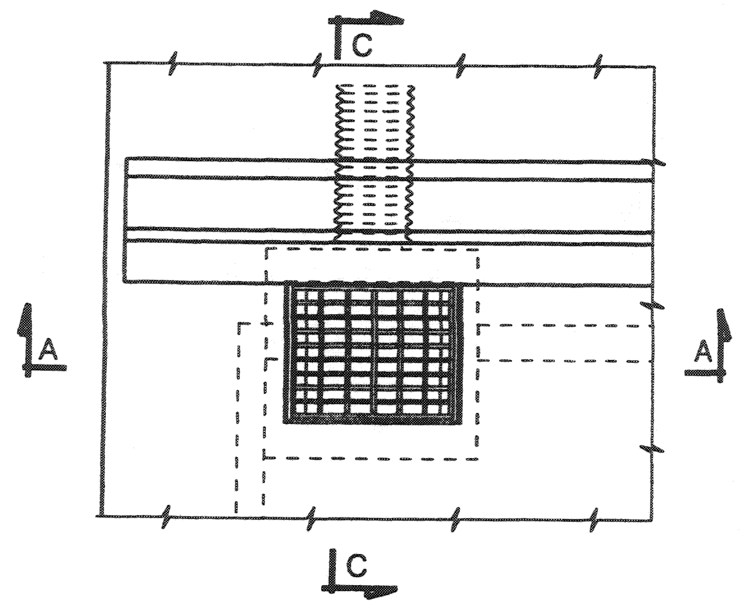

APPROACH SLAB DRAIN - B PLAN

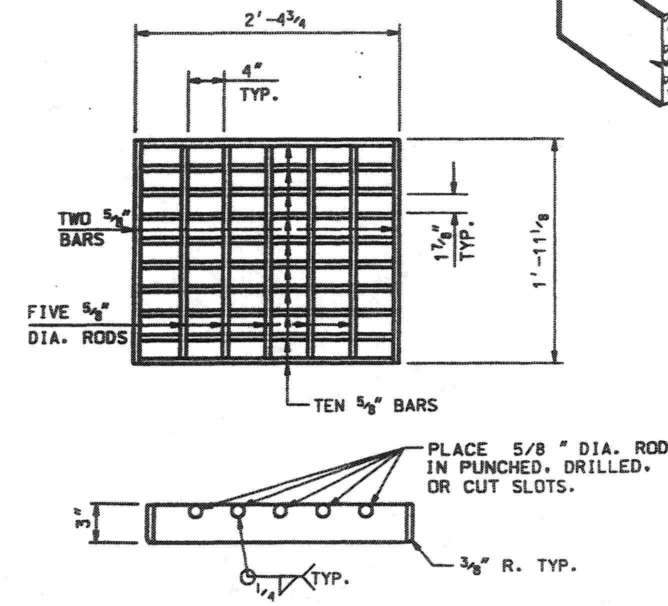

GRATE DETAIL

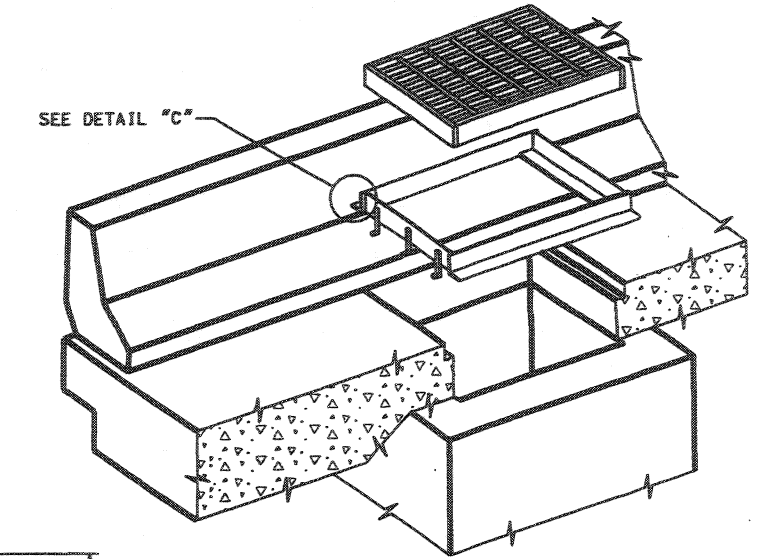

ISOMETRIC

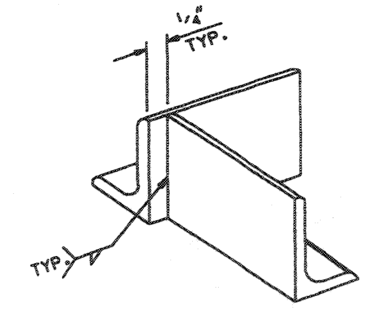

DETAIL "C"

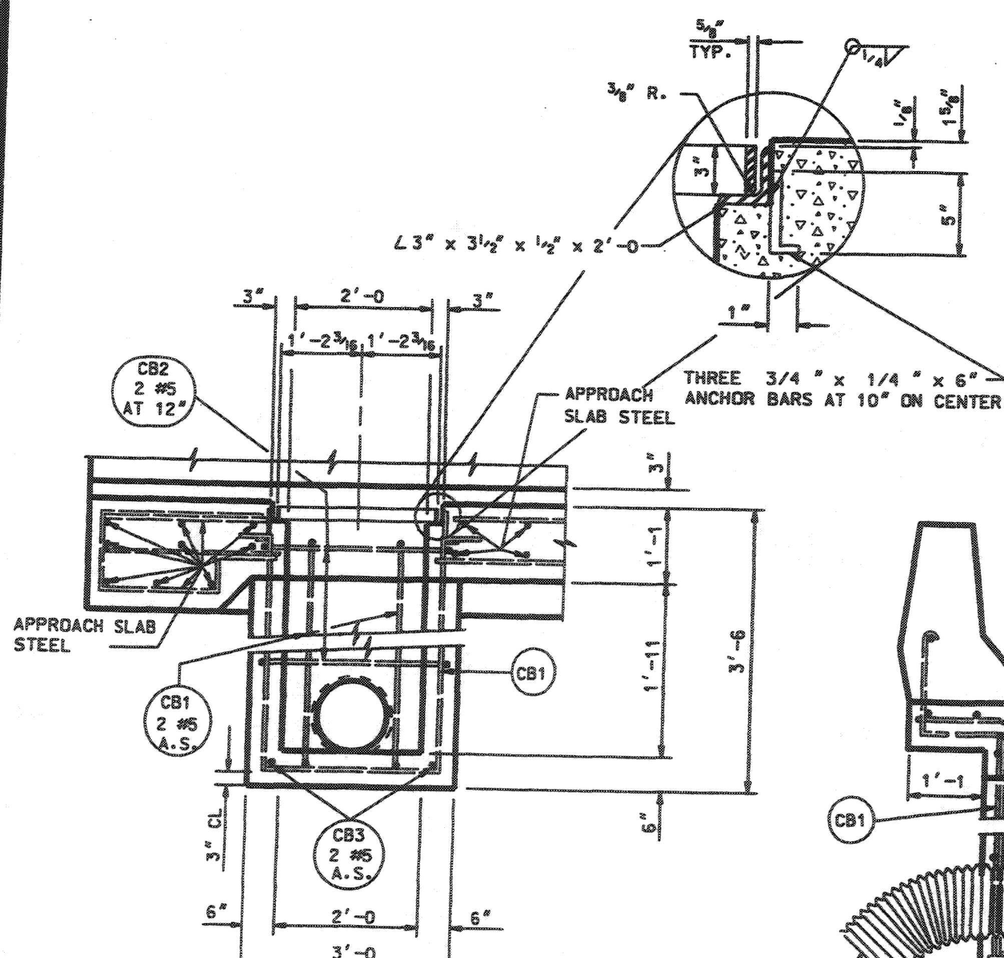

SECTION A-A

APPROACH SLAB DRAIN-A SIMILAR

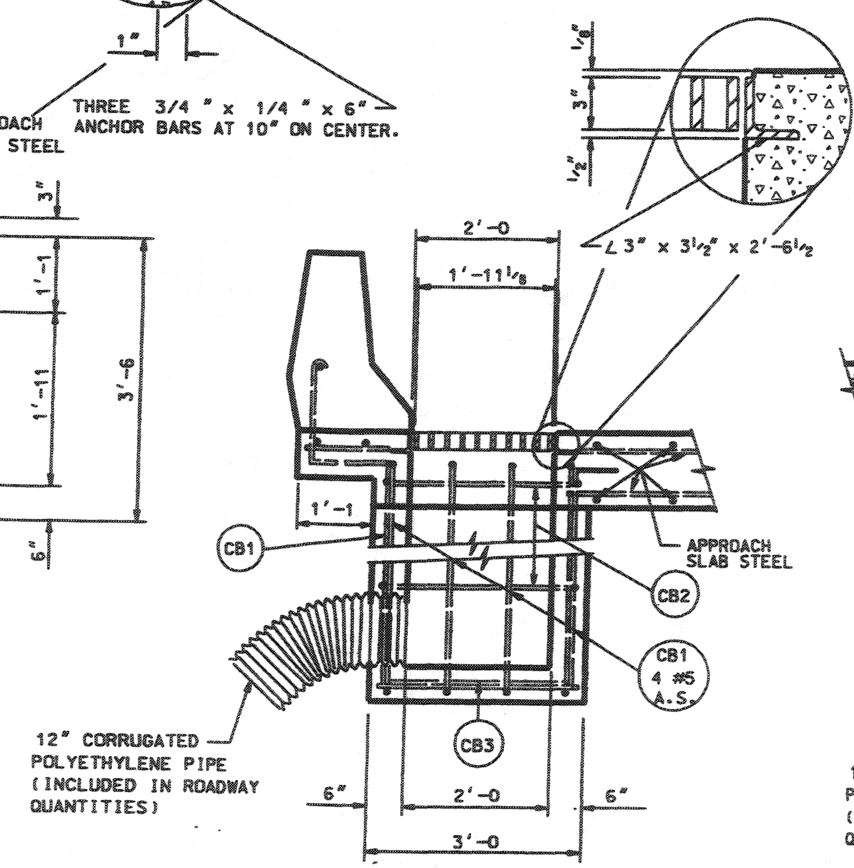

SECTION B-B

SECTION B-B IS FOR DRAIN B-PLAN

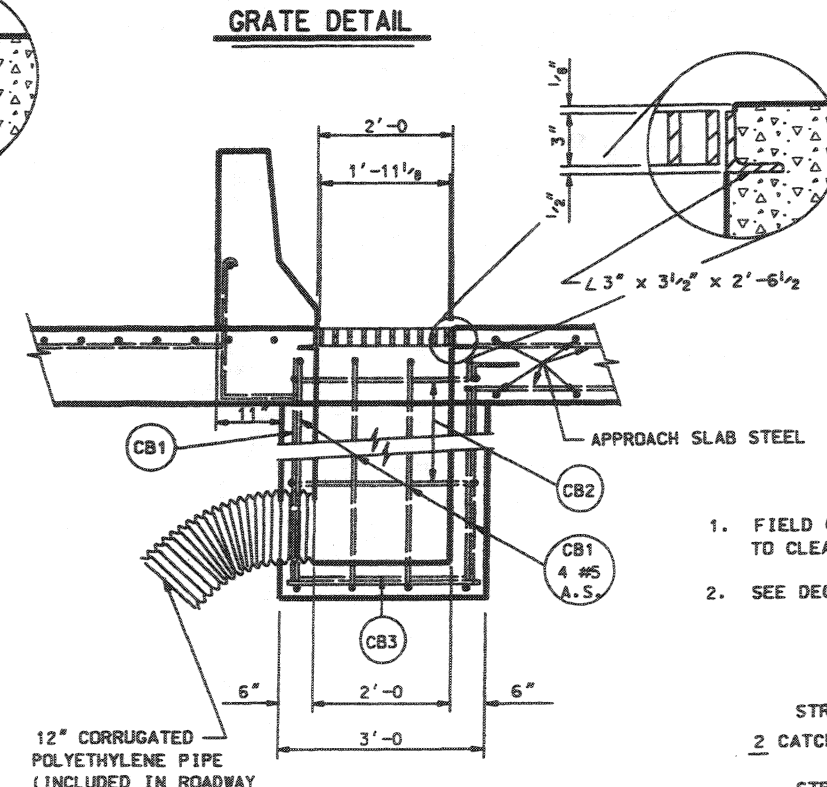

SECTION C-C

SECTION C-C IS FOR DRAIN A-PLAN

GENERAL NOTES

1. FIELD CUT OR BEND APPROACH SLAB REINFORCING TO CLEAR APPROACH SLAB DRAINS.
2. SEE DECK SHEET FOR ACTUAL LOCATIONS OF DRAINS.

QUANTITIES

STRUCTURAL CONCRETE QUANTITIES

2 CATCH BASINS AT 0.5 CU. YDS = 1 CU. YDS

STRUCTURAL STEEL QUANTITY

2 GRATES AND FRAMES AT 273 LBS = 546 LBS

UTAH DEPARTMENT OF TRANSPORTATION
SALT LAKE CITY, UTAH
STRUCTURES DIVISION

NO.	DATE	BY	REMARKS
			REVISIONS

DESIGN DH 05/03 CHECK GG 05/03
DRAWN VH 05/03 CHECK GG 05/03
QUANT. VH 05/03 CHECK GG 05/03

APPROVAL RECOM: SENIOR DESIGN ENGR. DATE
APPROVED FOR USE BY UDOT: UDOT BRIDGE ENGR. DATE

WASHINGTON INTERCHANGE AT RP 13
MP 13 ACCESS ROAD OVER I-15
APPROACH SLAB DRAIN DETAILS

PROJECT NUMBER * SP-15-1(20)13

WASHINGTON
COUNTY

C-922
DRG. NO.

SHT. 25 OF 30

DGN File N:\Projects\2520 03\Sheet Files\Structures\2520_c922drain.dgn
23-NOV-2003

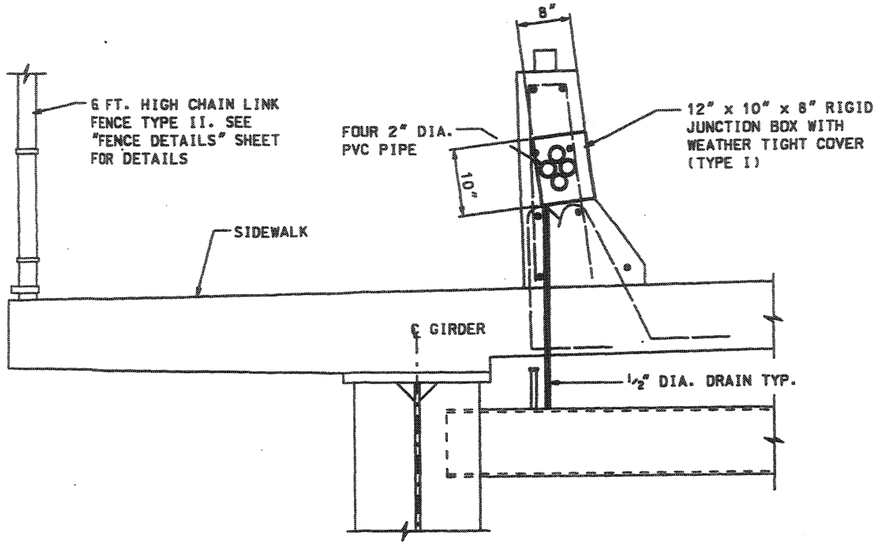

SECTION D-D

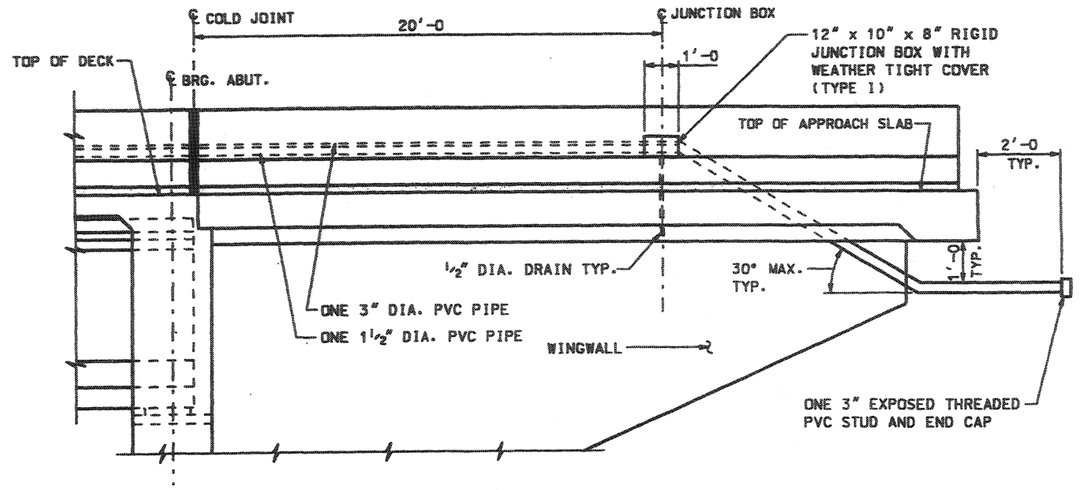

SECTION A-A

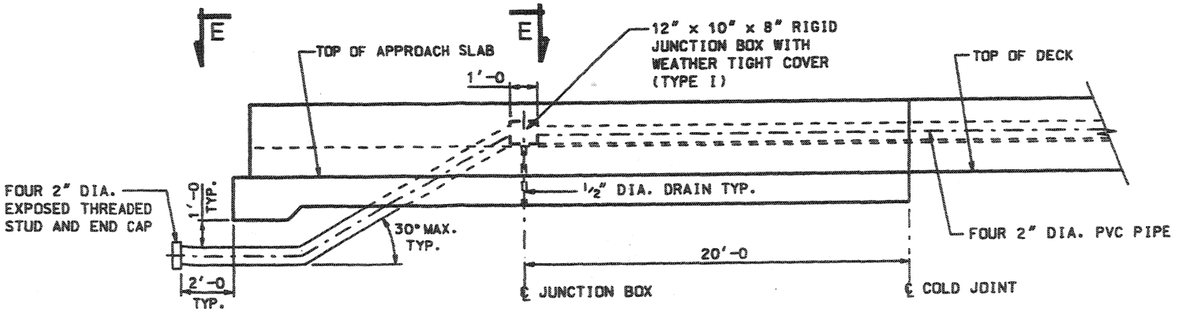

SECTION C-C

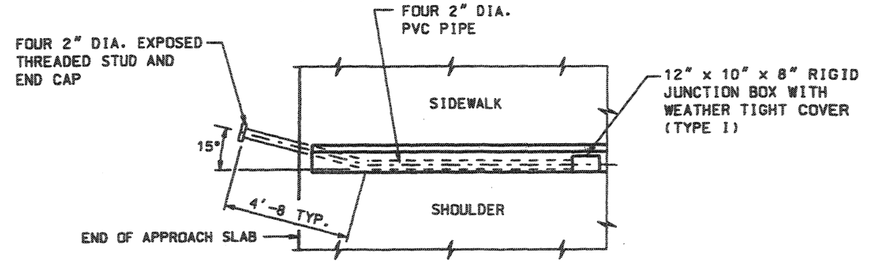

SECTION E-E

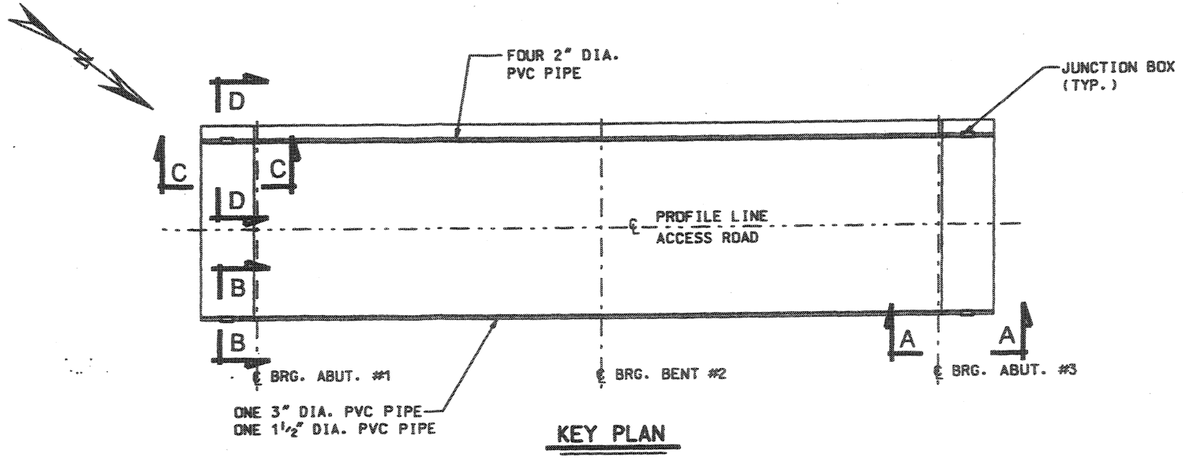

KEY PLAN

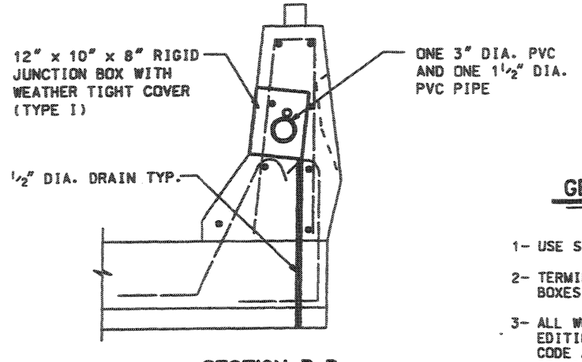

SECTION B-B

GENERAL NOTES

1- USE SCHEDULE 40 PVC PIPE.

2- TERMINATE PVC PIPE AT JUNCTION BOXES WITH DOUBLE LOCK NUTS.

3- ALL WORK SHALL COMPLY WITH THE LATEST EDITIONS OF THE NATIONAL ELECTRICAL CODE AND UNDERWRITERS LABORATORIES INC. STANDARDS WHERE APPLICABLE.

REVISIONS

NO.	DATE	BY	REMARKS

UTAH DEPARTMENT OF TRANSPORTATION
SALT LAKE CITY, UTAH
STRUCTURES DIVISION

DESIGN HCB 05/03 CHECK GG 05/03
DRAWN VH 05/03 CHECK GG 05/03
QUANT. CHECK GG 05/03

APPROVAL RECOMM. DATE SENIOR DESIGN ENGR.
APPROVED FOR USE BY DDOT DATE DDOT BRIDGE ENGR.

WASHINGTON INTERCHANGE AT RP 13
MP 13 ACCESS ROAD OVER I-15
ELECTRICAL DETAILS

PROJECT NUMBER * SP-15-1(20)13

WASHINGTON
COUNTY

C-922
DRG. NO.

SHT. 26 OF 30

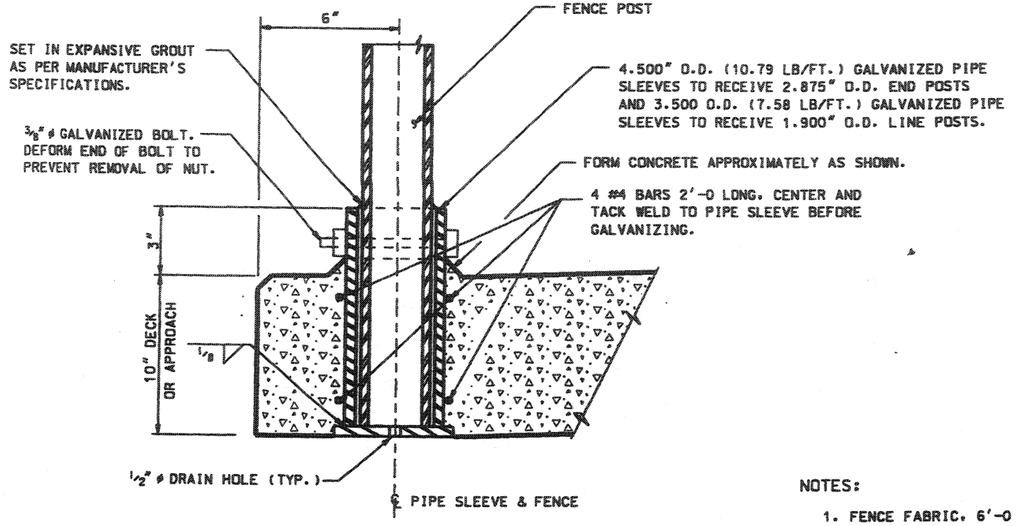

POST INSTALLATION DETAIL

NOTES:

1. FENCE FABRIC, 6'-0 HIGH, SHALL BE 9 GAGE WIRE KNUCKLED SELVAGE REQUIRED BOTTOM AND TWISTED AND BARBED SELVAGE REQUIRED TOP.
2. PLACE FENCE FABRIC ON SIDEWALK SIDE OF POST.
3. FOR ADDITIONAL CONNECTION DETAILS SEE "STATE OF UTAH STANDARD SPECIFICATIONS" CURRENT EDITION, AND STANDARD DRAWING NO. FG 6
4. ALL MATERIALS USED IN CONSTRUCTION OF THE FENCE SHALL MEET AASHTO SPECIFICATIONS.
5. THE PIPE SLEEVE ASSEMBLY SHALL BE HOT-DIP GALVANIZED AFTER FABRICATION IN ACCORDANCE WITH AASHTO M-111 (ASTM A-123).

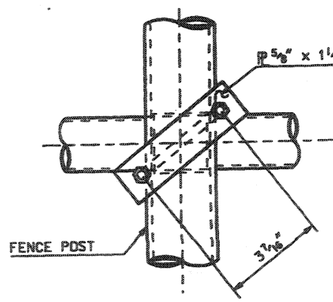

DETAIL "A"

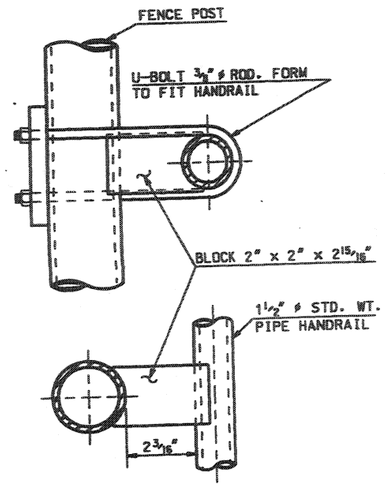

HANDRAIL CONNECTION DETAILS

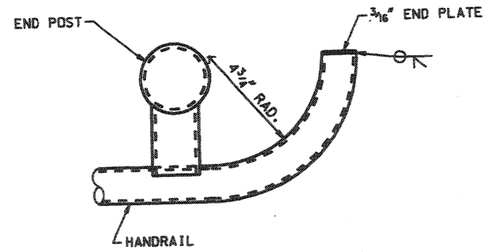

HANDRAIL END DETAIL

TYPICAL

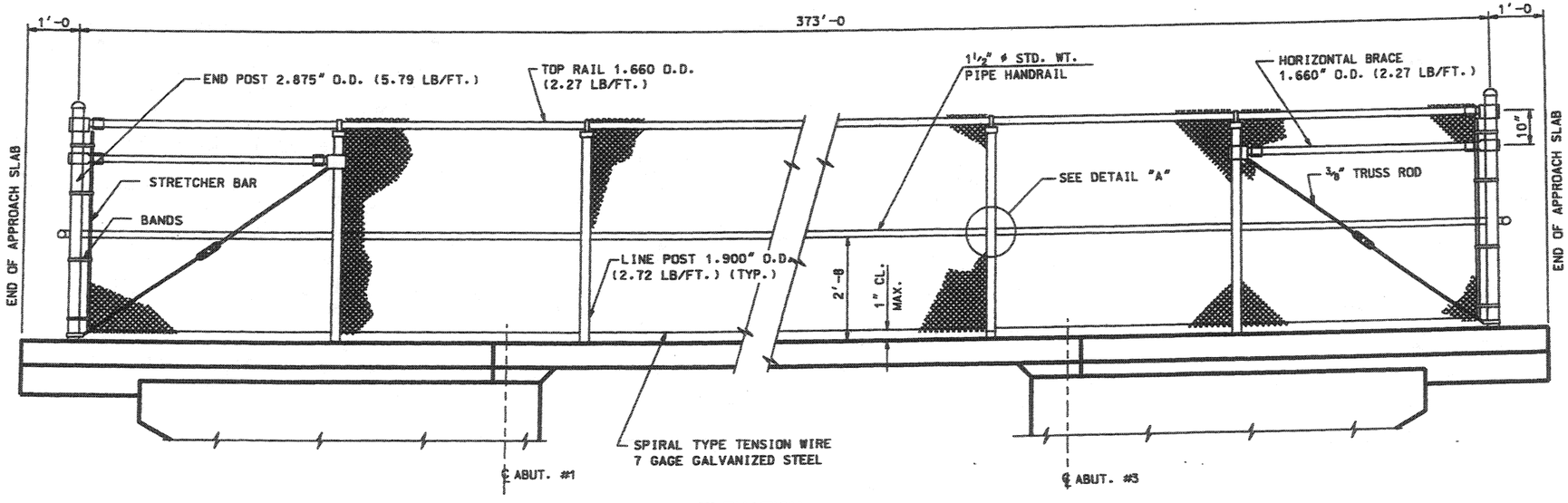

ELEVATION

UTAH DEPARTMENT OF TRANSPORTATION
SALT LAKE CITY, UTAH
STRUCTURES DIVISION

REVISIONS	NO.	DATE	BY	REMARKS

DESIGN DH 05/03 CHECK GG 05/03
DRAWN LM 05/03 CHECK GG 05/03
QUANT. VH 05/03 CHECK GG 05/03

SENIOR BRIDGE DESIGN ENGR. — DATE — APPROVAL RECOMMD.
SENIOR BRIDGE DESIGN ENGR. — DATE — APPROVED FOR USE BY UDOT

WASHINGTON INTERCHANGE AT RP 13
MP 13 ACCESS ROAD OVER I-15

FENCE DETAILS

PROJECT NUMBER * SP-15-1(20)13

WASHINGTON COUNTY

C-922 DRG. NO.

SHT. 27 OF 30

DGN File:N:\Projects\2928.03\Sheet Files\Structural\2928_s922fence.dgn
25-NOV-2003

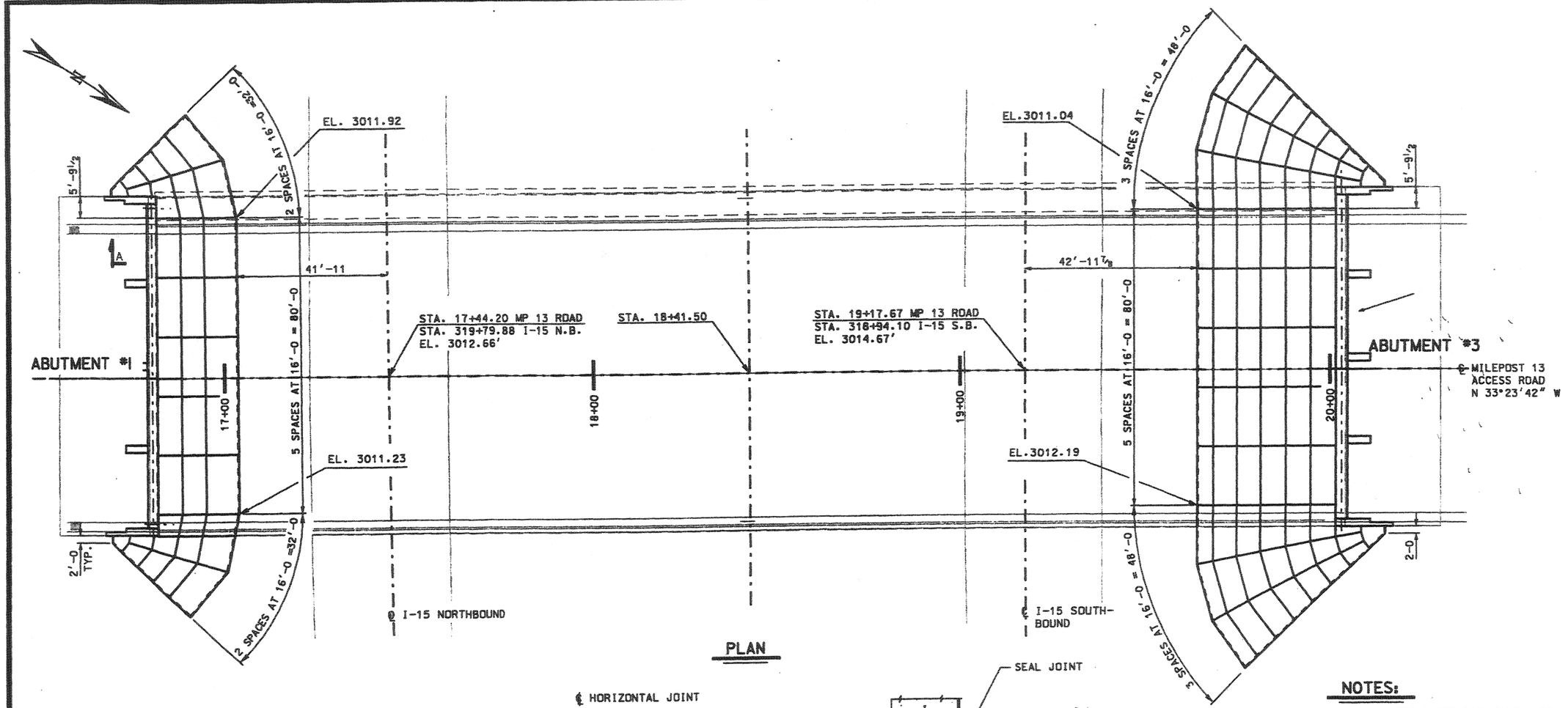

PLAN

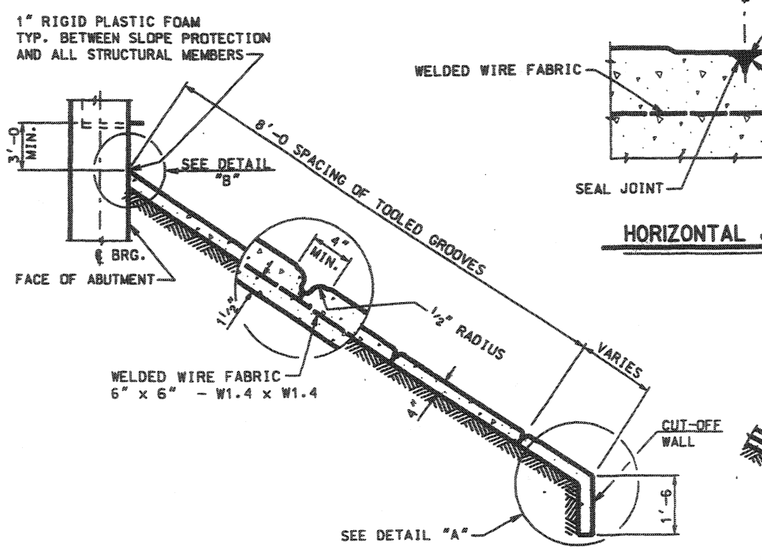

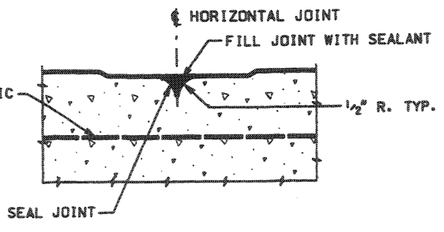

HORIZONTAL JOINT DETAIL

DETAIL "A"

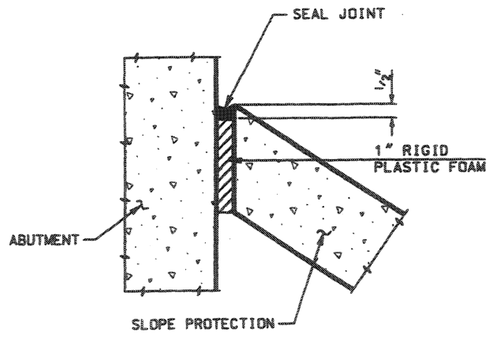

DETAIL "B"

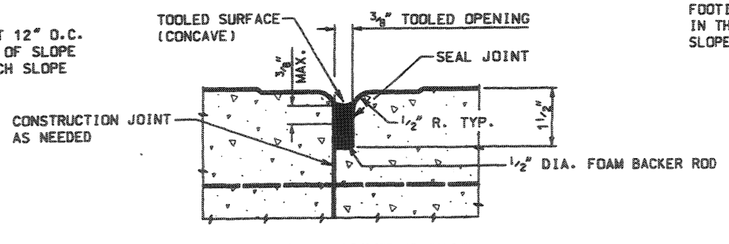

VERTICAL JOINT DETAIL

NOTES:

1. QUANTITIES GIVEN FOR CONCRETE SLOPE PROTECTION ARE ESTIMATES ONLY AND ARE BASED ON THE EXPOSED FINISHED CONCRETE SURFACE AREA.
2. ELEVATIONS AT TOE OF SLOPE ARE APPROXIMATE. THE RESIDENT ENGINEER MUST VERIFY ELEVATIONS PRIOR TO CONSTRUCTION.
3. LOCATION OF THE TOE OF SLOPE IS APPROXIMATE. THE TOE OF SLOPE WILL BE MODIFIED TO MEET FIELD CONDITIONS AS DIRECTED BY THE RESIDENT ENGINEER.
4. JUST PRIOR TO FINAL INSPECTION SEAL JOINTS BETWEEN THE CONCRETE SLOPE PROTECTION AND ALL STRUCTURAL MEMBERS.
5. USE CLASS A (AE) CONCRETE FOR ALL SLOPE PROTECTION.
6. CUT-OFF WALL (1'-6 x 4" THICK) IS CONTINUOUS AROUND PERIMETER OF SLOPE PROTECTION EXCEPT AT THE ABUTMENT FOOTING. PAYMENT FOR CUT-OFF WALLS IS INCLUDED IN THE CONTRACT PRICE PER CUBIC YARD FOR CONCRETE SLOPE PROTECTION.

CONCRETE SLOPE PROTECTION QUANTITIES

LOCATION	SQUARE YARDS
ABUTMENT #1	65
ABUTMENT #3	114
TOTAL	179

REVISIONS

NO.	DATE	BY	REMARKS

UTAH DEPARTMENT OF TRANSPORTATION
SALT LAKE CITY, UTAH
STRUCTURES DIVISION

DESIGN GG 05/03 CHECK HCB 05/03
DRAWN LM 05/03 CHECK GG 05/03
QUANT. VH 05/03 CHECK GG 05/03

AS-BUILT RECORD DATE ____ SENIOR DESIGN ENGR. ____
APPROVED FOR USE BY UDOT DATE ____ UDOT BRIDGE ENGR. ____

WASHINGTON INTERCHANGE AT RP 13
MP 13 ACCESS ROAD OVER I-15
CONCRETE SLOPE PROTECTION

PROJECT NUMBER * SP-15-1(20)13

WASHINGTON COUNTY

C-922 DRG. NO.

SHT. 28 OF 30

D:\Projects\2928_03\Struct_Files\Structures\2928_sl22.dgn (2928)

MARK	LOCATION	SIZE NO.	NO. BARS	LENGTH	TOTAL LENGTH	SKETCH
S1	SLAB	4	828	4'-0	3,312'-0	HOOK DIAMETER ϕ= 0'-2
S2	SLAB	4	828	3'-10	3,174'-0	HOOK DIAMETER ϕ= 0'-2
S3	SLAB	5	652	93'-9	61,125'-0	1 SPLICE(S) REQ'D
S4	SLAB	5	184	117'-6	21,620'-0	1 SPLICE(S) REQ'D
S5	SLAB	5	176	117'-6	20,680'-0	1 SPLICE(S) REQ'D
S6	SLAB	5	650	9'-2	5,954'-0	
S7	SLAB	6	183	103'-3	18,894'-9	1 SPLICE(S) REQ'D
S8	SLAB	6	88	103'-3	9,086'-0	1 SPLICE(S) REQ'D
S9	SLAB	8	184	10'-0	1,840'-0	
S10	SLAB	5	78	7'-9	604'-6	
S11	SLAB	5	24	11'-5	273'-0	
AS1	APPROACH	8	234	24'-8	5,772'-0	
AS2	APPROACH	5	184	24'-8	4,538'-8	
AS3	APPROACH	5	184	7'-9	1,418'-4	
AS4	APPROACH	8	6	96'-7	579'-6	1 SPLICE(S) REQ'D
AS5	APPROACH	5	50	93'-3	4,662'-6	1 SPLICE(S) REQ'D
AS6	APPROACH	5	50	89'-1	4,454'-2	1 SPLICE(S) REQ'D
W1	WINGWALL	5	96	10'-3	984'-0	
W2	WINGWALL	5	56	3'-8	205'-4	7 BAR(S) PER 1/2 SET 8 1/2 SET(S) REQ'D
W3	WINGWALL	4	12	14'-8	176'-0	

MARK	LOCATION	SIZE NO.	NO. BARS	LENGTH	TOTAL LENGTH	SKETCH
W4	WINGWALL	4	20	11'-7	232'-6	5 BAR(S) PER 1/2 SET 4 1/2 SET(S) REQ'D
W5	WINGWALL	4	20	8'-8	173'-4	
W6	WINGWALL	4	12	7'-0	84'-0	
W7	WINGWALL	4	16	3'-9	60'-0	4 BAR(S) PER 1/2 SET 4 1/2 SET(S) REQ'D
W8	WINGWALL	5	8	8'-9	70'-0	
W9	WINGWALL	8	84	16'-2	1,358'-0	
W10	WINGWALL	8	100	12'-0	1,200'-0	
W11	WINGWALL	5	176	2'-8	469'-4	HOOK DIAMETER ϕ= 0'-4
A1	ABUTMENT	8	32	92'-6	2,960'-0	1 SPLICE(S) REQ'D
A2	ABUTMENT	10	16	93'-9	1,500'-0	1 SPLICE(S) REQ'D
A3	ABUTMENT	6	352	18'-8	6,570'-8	
A4	ABUTMENT	5	84	10'-3	861'-0	
A5	ABUTMENT	8	252	10'-8	2,709'-0	HOOK DIAMETER ϕ= 0'-6
A6	ABUTMENT	5	264	2'-8	704'-0	HOOK DIAMETER ϕ= 0'-4
A7	ABUTMENT	4	352	4'-8	1,642'-8	
A8	ABUTMENT	4	126	3'-8	462'-0	
A9	ABUTMENT	5	528	3'-7	1,892'-0	

MARK	LOCATION	SIZE NO.	NO. BARS	LENGTH	TOTAL LENGTH	SKETCH
F1	FOOTING	8	25	98'-1	2,452'-1	1 SPLICE(S) REQ'D
F2	FOOTING	8	25	96'-6	2,412'-6	1 SPLICE(S) REQ'D
F3	FOOTING	8	298	16'-4	4,867'-4	
F4	FOOTING	8	50	14'-1	704'-2	
B1	BENT	11	8	51'-10	414'-8	HOOK DIAMETER ϕ= 1'-0
B2	BENT	11	4	51'-10	207'-4	HOOK DIAMETER ϕ= 1'-0
B3	BENT	8	12	47'-3	567'-0	
B4	BENT	8	2	45'-7	91'-2	
B5	BENT	11	8	50'-7	404'-8	
B6	BENT	11	8	51'-11	415'-4	HOOK DIAMETER ϕ= 1'-0
B7	BENT	11	4	51'-11	207'-8	HOOK DIAMETER ϕ= 1'-0
B8	BENT	8	12	46'-8	560'-0	
B9	BENT	8	2	45'-0	90'-0	
B10	BENT	11	8	50'-7	404'-8	
B11	BENT	5	16	9'-3	148'-0	
B12	BENT	8	14	17'-4	242'-8	

NO.	DATE	BY	REMARKS
			REVISIONS

UTAH DEPARTMENT OF TRANSPORTATION
SALT LAKE CITY, UTAH
STRUCTURES DIVISION

DESIGN GG 9/03 CHECK HCB 9/03
DRAWN LM 9/03 CHECK GG 9/03
QUANT. CHECK

APPROVAL RECOMMEND. SENIOR DESIGN ENGR. DATE
APPROVED FOR USE BY UDOT UDOT BRIDGE ENGR. DATE

WASHINGTON INTERCHANGE AT RP 13
MP 13 ACCESS ROAD OVER I-15
REINFORCING STEEL SCHEDULE I

PROJECT NUMBER * SP-15-1(20)13

WASHINGTON COUNTY

C-922 DRG. NO.

SHT. 29 OF 30

DGN: File:N:\Projects\2828.03\Struct\Files\Structure\2828_s922sheet1.dgn
29-NOV-2003

MARK	LOCATION	SIZE NO.	NO. BARS	LENGTH	TOTAL LENGTH
B13	BENT	6	24	16'-3	390'-0
B14	BENT	6	238	17'-10	4,244'-4
B15	BENT	6	12	12'-1	145'-0
B16	BENT	6	6	13'-8	82'-0
C1	COLUMN	5	6	995'-2	5,970'-10
C2	COLUMN	11	144	30'-3	4,356'-0
D1	DIAPHRAGM	8	22	92'-6	2,035'-0
D2	DIAPHRAGM	6	352	6'-9	2,376'-0
D3	DIAPHRAGM	6	296	10'-5	3,083'-4
D4	DIAPHRAGM	6	134	13'-2	1,764'-4
D5	DIAPHRAGM	6	56	6'-0	336'-0
D6	DIAPHRAGM	5	720	3'-7	2,580'-0
P1	PARAPET	4	828	5'-4	4,416'-0
P2	PARAPET	4	16	345'-4	5,525'-4
P3	PARAPET	4	32	24'-6	784'-0
P4	PARAPET	4	8	2'-6	20'-0

* LAP SPLICE NOT PERMITTED. SEE NOTE 1 ON "BENT SECTIONS I" SHEET FOR OPTIONAL MECHANICAL SPLICE AT COLUMN CAP INTERFACE.

SKETCH

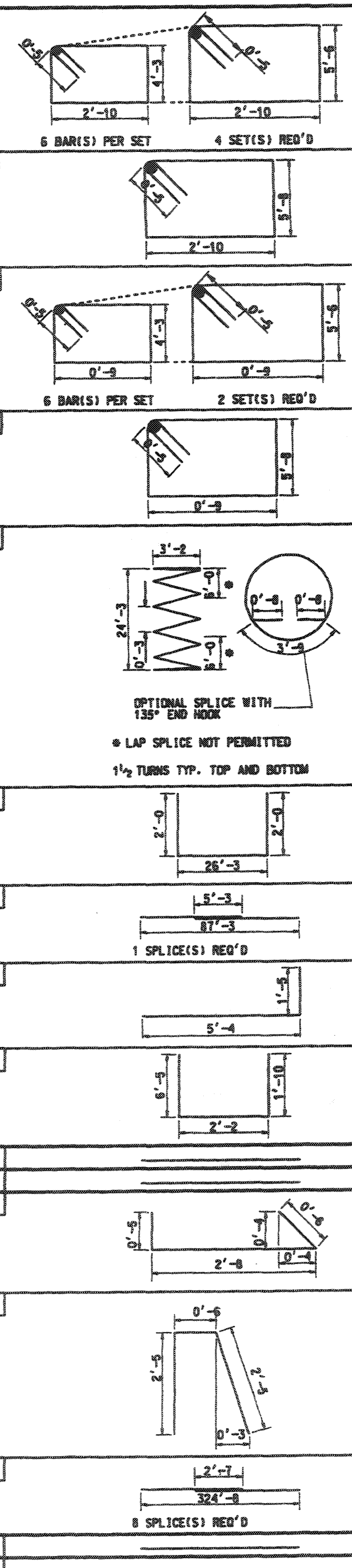

MARK	LOCATION	SIZE NO.	NO. BARS	LENGTH	TOTAL LENGTH	SKETCH

MARK	LOCATION	SIZE NO.	NO. BARS	LENGTH	TOTAL LENGTH	SKETCH

SUMMARY OF COATED BARS

20,061'-10 OF NUMBER	4 BARS AT	0.668 LBS/FT =	13,401.3 LBS
139,214'-8 OF NUMBER	5 BARS AT	1.043 LBS/FT =	145,200.9 LBS
46,972'-5 OF NUMBER	6 BARS AT	1.502 LBS/FT =	70,552.6 LBS
30,440'-5 OF NUMBER	8 BARS AT	2.670 LBS/FT =	81,275.9 LBS
1,500'-0 OF NUMBER	10 BARS AT	4.303 LBS/FT =	6,454.5 LBS
6,410'-4 OF NUMBER	11 BARS AT	5.313 LBS/FT =	34,058.1 LBS
		TOTAL	350,943.3 LBS

NOTES:

ALL BARS ARE COATED

BAR SIZES ARE U.S. UNITS.

REINFORCING STEEL DIMENSIONS ARE OUT TO OUT OF BAR UNLESS OTHERWISE SPECIFIED.

SPLICES MAY BE OMITTED AT FABRICATORS OPTION...HOWEVER, IN SUCH CASE, FABRICATOR ASSUMES RESPONSIBILITY FOR FIT.

NO. | DATE | BY | REVISIONS | REMARKS

UTAH DEPARTMENT OF TRANSPORTATION
SALT LAKE CITY, UTAH
STRUCTURES DIVISION

DESIGN GG 9/03 CHECK HCB 9/03
DRAWN LM 9/03 CHECK HCB 9/03
QUANT. CHECK
APPROVAL RECOMM. DATE SENIOR DESIGN ENGR.
APPROVED FOR USE BY UDOT DATE UDOT BRIDGE ENGR.

WASHINGTON INTERCHANGE AT RP 13
MP 13 ACCESS ROAD OVER I-15
REINFORCING STEEL SCHEDULE II

PROJECT NUMBER * SP-15-1(20)13

WASHINGTON COUNTY

C-922 DRG. NO.

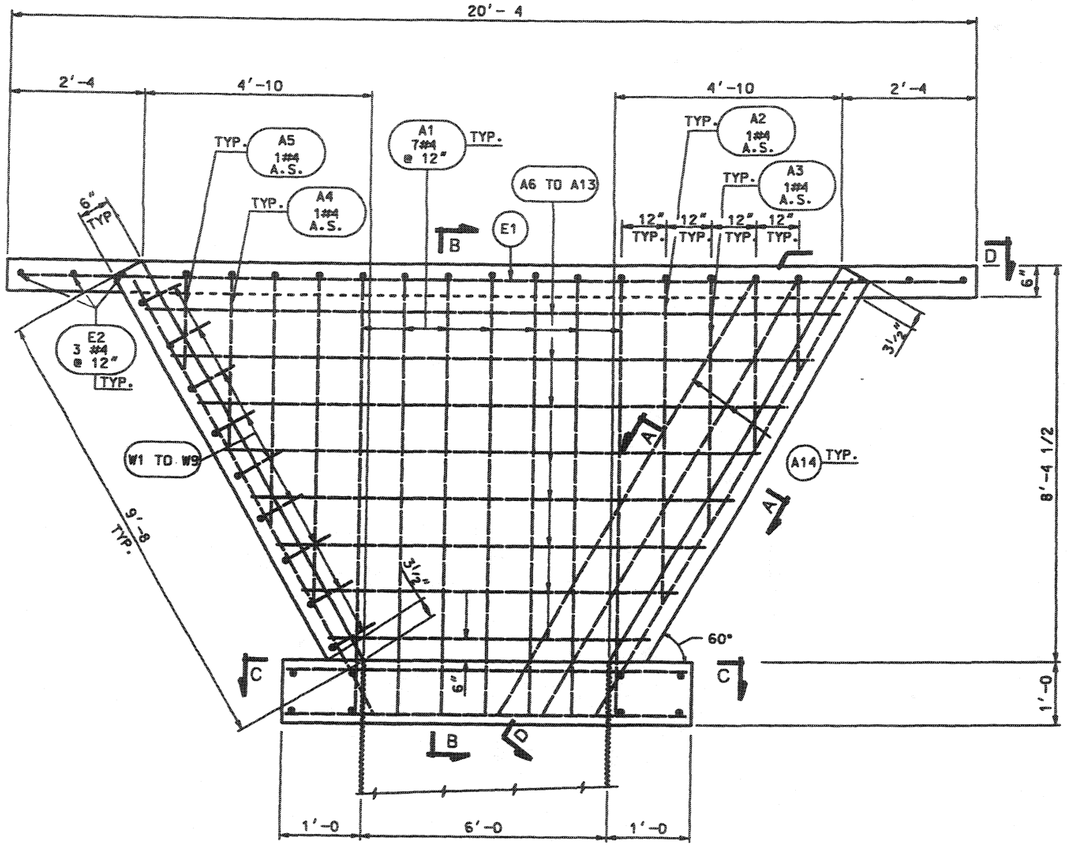

PLAN

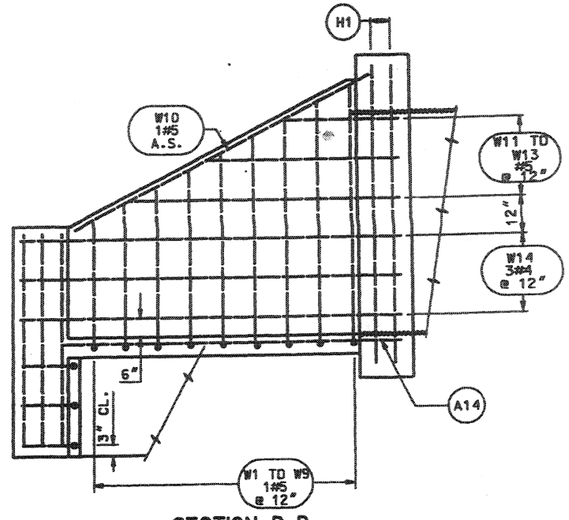

SECTION D-D

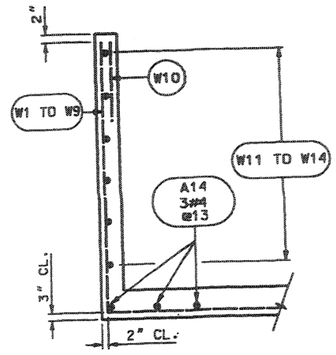

SECTION A-A

HEADWALL	STATION		OFFSET
H2008A	I-15 NB	296+44.32	46.32 RIGHT
H2008B		296+41.46	42.29 LEFT
H2008C	I-15 SB	295+87.31	43.35 RIGHT
H2008D		295+79.58	54.22 LEFT

HEADWALL	STATION		OFFSET
H2008E	I-15 ACCESS ROAD	29+44.30	97.98 LEFT
H2008F		30+62.27	83.30 RIGHT
H2008G	"A" - LINE	18+95.08	71.76 RIGHT
H2008H		19+95.86	83.33 LEFT

GENERAL NOTES

1. USE COATED DEFORMED-BILLET REINFORCING STEEL BARS CONFORMING TO AASHTO M 284 OR M 111 AND M 31 GRADE 60 RESPECTIVELY.
2. CHAMFER ALL EXPOSED CONCRETE CORNERS ¾" EXCEPT WHERE NOTED OTHERWISE.
3. PROVIDE 2" CONCRETE COVER TO REINFORCING STEEL EXCEPT WHERE NOTED OTHERWISE
4. USE CLASS AA(AE) CAST-IN-PLACE CONCRETE EXCEPT WHERE SPECIFIED OTHERWISE.
5. 10 STD. HOOK BOLTS ¾" ø x 8" REQUIRED. SPACE @ 24"± ON PERIPHERY AND POSITION 6" FROM THE END OF THE PIPE. GALVANIZE HOOK BOLTS AND NUTS IN ACCORDANCE WITH AASHTO M232. INCLUDE PAYMENT FOR FURNISHING AND PLACING HOOK. BOLTS AND NUTS IN THE COST OF 72" PIPE HEADWALL.
6. ESTIMATED QUANTITIES FOR EACH 72" PIPE HEADWALL ARE 677 LBS COATED REINFORCING STEEL BARS AND 6 CU. YRDS. STRUCTURAL CONCRETE.
7. FORM HEADWALL NUMBER IN 6" BLOCK LETTERS AT THE TOP CENTER OF HEADWALL.

DESIGN DATA

AASHTO LRFD BRIDGE DESIGN SPECIFICATIONS
AND INTERIM SPECIFICATIONS.

CAST-IN-PLACE CONCRETE: CLASS AA (AE) f'_c = 3650 PSI; f_y (REINF.) = 60,000 PSI; n = 8

QUANTITIES

ITEM	ESTIM.	UNIT	AS CONST.
72" DIA. PIPE HEADWALL	8	EACH	
REMOVE CONCRETE HEADWALL 61" - 84" PIPE	4	EACH	

INDEX OF SHEETS

1. 72" DIA. PIPE HEADWALL
2. REINFORCING STEEL SCHEDULE

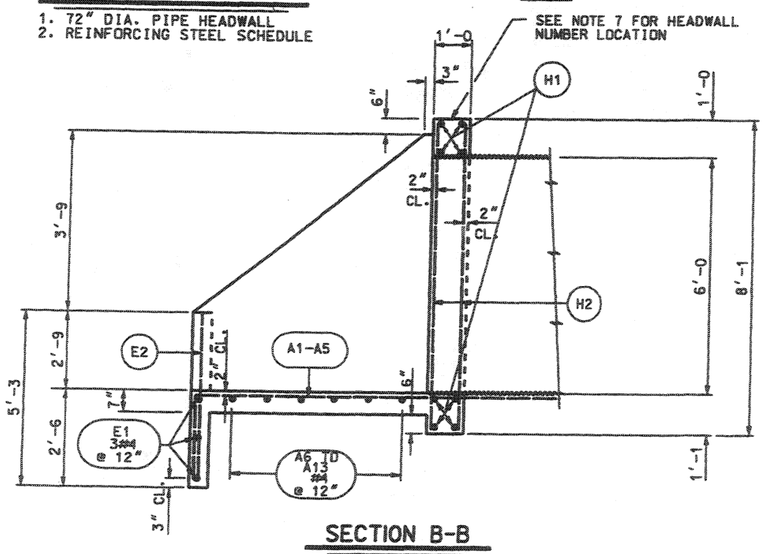

SECTION B-B

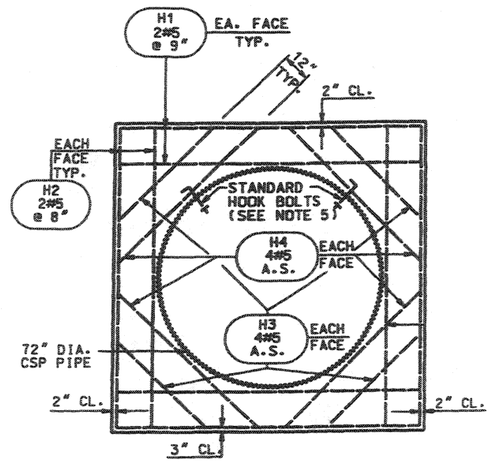

SECTION C-C

UTAH DEPARTMENT OF TRANSPORTATION
SALT LAKE CITY, UTAH
STRUCTURES DIVISION

DESIGN RH 1/03 | CHECK HCB 1/03
DRAWN YHB 1/03 | CHECK HCB 1/03
QUANT. RH 1/03 | CHECK HCB 7/03

NO.	DATE	BY	REVISIONS	REMARKS

APPROVAL RECOMM. — SENIOR DESIGN ENGR. — DATE
APPROVED FOR USE BY UDOT — ASST. STRUCT. DESIGN ENGR. — DATE

WASHINGTON INTERCHANGE
AT RP 13
72" DIA. PIPE HEADWALL
PROJECT NUMBER * SP-15-1(20)13

WASHINGTON COUNTY
H-2008
DRG. NO.
SHT. 1 OF 2

25-NOV-2003
DGN File: N:\Projects\2528.83\Sheets_Files\Structures\2528_H-2008sht1new.dgn

MARK	LOCATION	SIZE NO.	NO. BARS	LENGTH	TOTAL LENGTH	SKETCH
						A
H1	HEADWALL	5	8	7'-8	61'-4	7'-8
H2	HEADWALL	5	8	7'-8	61'-4	7'-8
H3	HEADWALL	5	8	2'-6	20'-0	2'-6
H4	HEADWALL	5	8	4'-6	36'-0	4'-6
						A B
A1	APRON	4	7	11'-1	77'-7	9'-0 2'-1
A2	APRON	4	2	9'-3	18'-6	7'-2 2'-1
A3	APRON	4	2	7'-6	15'-0	5'-5 2'-1
A4	APRON	4	2	5'-9	11'-6	3'-8 2'-1
A5	APRON	4	2	4'-0	8'-0	1'-11 2'-1
						A
A6	APRON	4	1	7'-4	7'-4	7'-4
A7	APRON	4	1	8'-6	8'-6	8'-6
A8	APRON	4	1	9'-8	9'-8	9'-8
A9	APRON	4	1	10'-10	10'-10	10'-10
A10	APRON	4	1	12'-0	12'-0	12'-0
A11	APRON	4	1	13'-2	13'-2	13'-2
A12	APRON	4	1	14'-4	14'-4	14'-4
A13	APRON	4	1	15'-6	15'-6	15'-6
A14	ARPON	4	6	10'-3	61'-6	10'-3
						A B
W1	WINGWALL	5	2	9'-4	18'-8	6'-10 2'-6
W2	WINGWALL	5	2	8'-11	17'-10	6'-5 2'-6
W3	WINWALL	5	2	8'-5	16'-10	5'-11 2'-6
W4	WINGWALL	5	2	8'-0	16'-0	5'-6 2'-6
W5	WINGWALL	5	2	7'-7	15'-2	5'-1 2'-6
W6	WINGWALL	5	2	7'-2	14'-4	4'-8 2'-6
W7	WINGWALL	5	2	6'-9	13'-6	4'-3 2'-6
W8	WINGWALL	5	2	6'-4	12'-8	3'-10 2'-6
W9	WINGWALL	5	2	5'-11	11'-10	3'-5 2'-6
W10	WINGWALL	5	2	12'-3	24'-6	
						A
W11	WINGWALL	4	2	3'-5	6'-10	3'-5
W12	WINGWALL	4	2	6'-0	12'-0	6'-0
W13	WINGWALL	4	2	8'-7	17'-2	8'-7
W14	WINGWALL	4	6	12'-3	73'-6	2'-0 9" 10'-3 1'-0
E1	ENDWALL	4	3	20'-0	60'-0	
E2	ENDWALL	4	6	4'-11	29'-6	

MARK	LOCATION	SIZE NO.	NO. BARS	LENGTH	TOTAL LENGTH	SKETCH

MARK	LOCATION	SIZE NO.	NO. BARS	LENGTH	TOTAL LENGTH	SKETCH

SUMMARY OF COATED BARS

482'-5 OF NUMBER	4 BARS AT	0.668 LBS/FT =	322.3 LBS
340'-0 OF NUMBER	5 BARS AT	1.043 LBS/FT =	354.6 LBS
		TOTAL	676.9 LBS

NOTES:

ALL BARS ARE COATED

BAR SIZES ARE U.S. UNITS.

REINFORCING STEEL DIMENSIONS ARE OUT TO OUT OF BAR UNLESS OTHERWISE SPECIFIED.

SPLICES MAY BE OMITTED AT FABRICATORS OPTION...HOWEVER, IN SUCH CASE, FABRICATOR ASSUMES RESPONSIBILITY FOR FIT.

REBAR QUANTITIES ARE FOR INFORMATION ONLY AND COST OF REBAR IS INCLUDED HEADWALL BID ITEM.

REVISIONS

NO.	DATE	BY	REMARKS

UTAH DEPARTMENT OF TRANSPORTATION
SALT LAKE CITY, UTAH
STRUCTURES DIVISION

DESIGN RH 05/03 CHECK GG 05/03
DRAWN VHB 05/03 CHECK RH 05/03
QUANTY. CHECK

APPROVAL RECOMM. DATE SENIOR DESIGN ENGR.
APPROVED FOR USE BY UDOT DATE UDOT BRIDGE ENGR.

WASHINGTON INTERCHANGE
AT RP 13
REINFORCING STEEL SCHEDULE
PROJECT NUMBER * SP-15-1(20)13

WASHINGTON COUNTY

H-2008 DRG. NO.

SHT. 2 OF 2

DGN File: N:\Projects\2828.65\Sheet_Files\Structures\2828_hc2008sh2.dgn

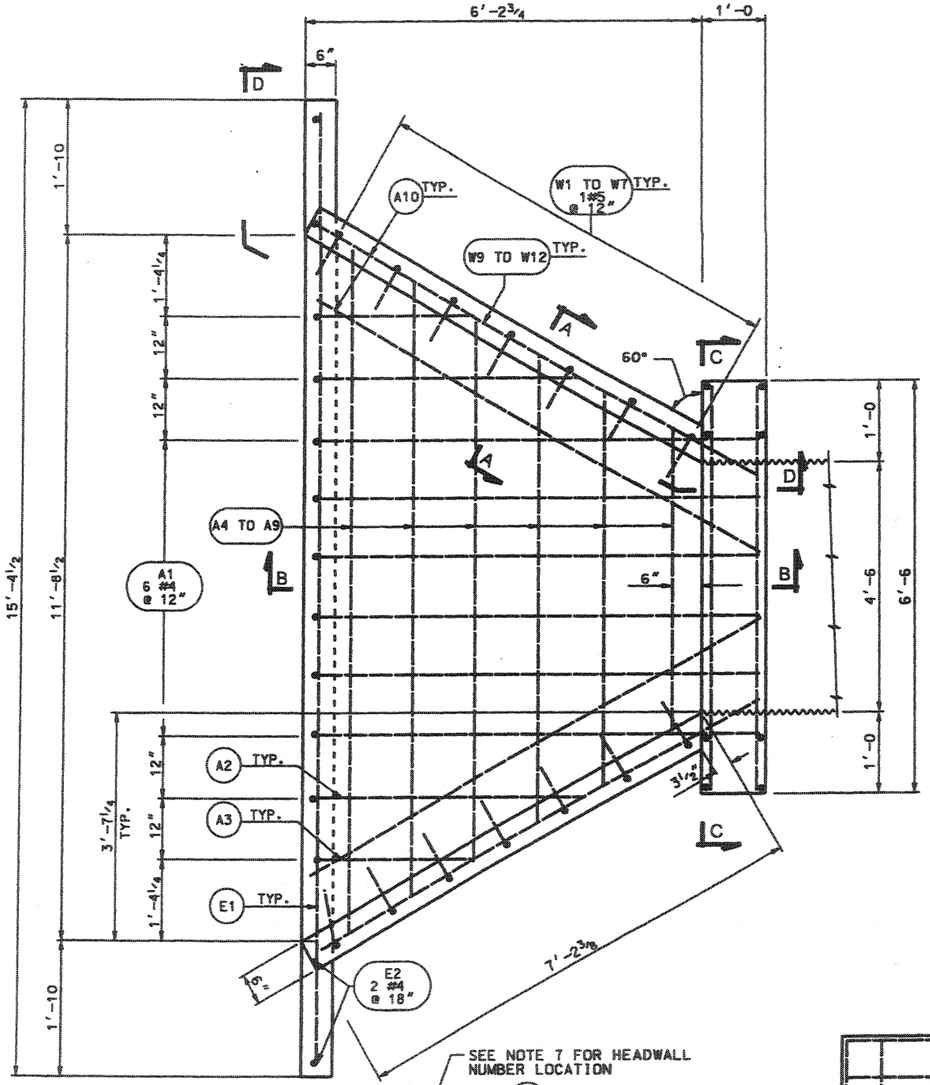

PLAN

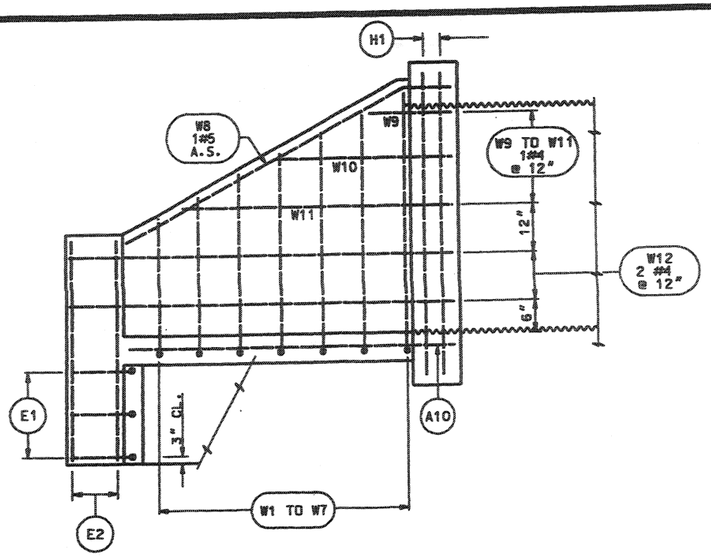

SECTION D-D

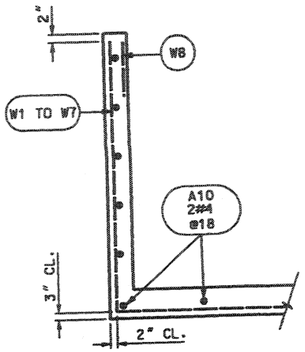

SECTION A-A

54" PIPE HEADWALL	STATION		OFFSET
H2009A	NB I-15	310+47.89	129.51 RIGHT
H2009B		310+99.40	54.41 LEFT

INDEX OF SHEETS

1. 54" DIA. PIPE HEADWALL
2. REINFORCING STEEL SCHEDULE

GENERAL NOTES

1. USE COATED DEFORMED-BILLET REINFORCING STEEL BARS CONFORMING TO AASHTO M 284 OR M 111 AND M 31 GRADE 60 RESPECTIVELY.
2. CHAMFER ALL EXPOSED CONCRETE CORNERS ¾" EXCEPT WHERE NOTED OTHERWISE.
3. PROVIDE 2" CONCRETE COVER TO REINFORCING STEEL EXCEPT WHERE NOTED OTHERWISE
4. USE CLASS AA(AE) CAST-IN-PLACE CONCRETE EXCEPT WHERE SPECIFIED OTHERWISE.
5. 7 STD. HOOK BOLTS 3/4" D x 8" REQUIRED. SPACE @ 24"± ON PERIPHERY AND POSITION 6" FROM THE END OF THE PIPE. GALVANIZE HOOK BOLTS AND NUTS IN ACCORDANCE WITH AASHTO M232. INCLUDE PAYMENT FOR FURNISHING AND PLACING HOOK BOLTS AND NUTS IN THE COST OF 54" DIA. PIPE HEADWALL.
6. ESTIMATED QUANTITIES FOR EACH 54" PIPE HEADWALL ARE 425 LBS COATED REINFORCING STEEL BARS AND 4.4 CU. YRDS. STRUCTURAL CONCRETE.
7. FORM HEADWALL NUMBER IN 6" BLOCK LETTERS AT TOP CENTER OF HEADWALL.

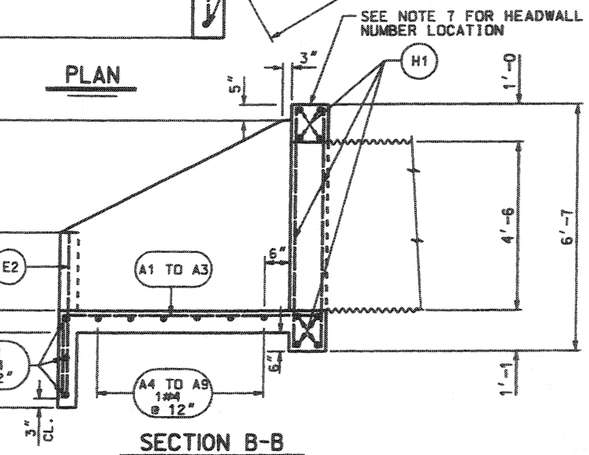

SECTION B-B

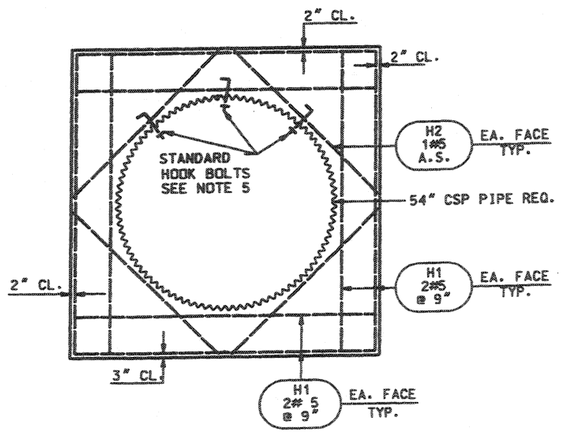

SECTION C-C

DESIGN DATA

AASHTO LRFD BRIDGE DESIGN SPECIFICATIONS AND INTERIM SPECIFICATIONS.

CAST-IN-PLACE CONCRETE: CLASS AA (AE) $f'c$ = 3650 PSI; f_y (REINF.) = 60,000 PSI; n = 8

QUANTITIES

ITEM	ESTIM.	UNIT	AS CONST.
54" DIA. PIPE HEADWALL	2	EACH	
REMOVE CONCRETE HEADWALL 37" - 60" PIPE	2	EACH	

UTAH DEPARTMENT OF TRANSPORTATION
SALT LAKE CITY, UTAH
STRUCTURES DIVISION

REVISIONS | NO. | DATE | BY | REMARKS

DESIGN RH 1/03 | CHECK HCB 1/03
DRAWN VB 1/03 | CHECK RH 1/03
QUANT. RH 1/03 | CHECK VB 1/03

SENIOR DESIGN ENGR. — DATE — APPROVAL RECOMMD.
DGGT BRIDGE ENGR. — DATE — APPROVED FOR USE BY UDOT

WASHINGTON INTERCHANGE
AT RP 13
54" DIA. PIPE HEAD WALL
PROJECT NUMBER * SP-15-1(20)13

WASHINGTON COUNTY
H-2009
DRG. NO.
SHT. 1 OF 2

25-NOV-2003
DGN: Files:N:\Projects\2528.83\Struct.Files\Structures\2528_H-2009.mstr.idgn

MARK	LOCATION	SIZE NO.	NO. BARS	LENGTH	TOTAL LENGTH	A	B	SKETCH
H1	HEADWALL	5	16	6'-2	98'-8			
H2	HEADWALL	5	8	4'-0	32'-0			
A1	APRON	4	6	8'-11	53'-6	6'-10	2'-1	
A2	APRON	4	2	6'-8	13'-4	4'-7	2'-1	
A3	APRON	4	2	4'-11	9'-10	2'-10	2'-1	
A4	APRON	4	1	5'-10	5'-10	5'-10		
A5	APRON	4	1	7'-0	7'-0	7'-0		
A6	APRON	4	1	8'-2	8'-2	8'-2		
A7	APRON	4	1	9'-4	9'-4	9'-4		
A8	APRON	4	1	10'-6	10'-6	10'-6		
A9	APRON	4	1	11'-8	11'-8	11'-8		
A10	APRON	4	4	7'-10	31'-4	7'-10		
W1	WINGWALL	5	2	6'-10	13'-8	5'-2	1'-8	
W2	WINGWALL	5	2	6'-5	12'-10	4'-9	1'-8	
W3	WINGWALL	5	2	5'-11	11'-10	4'-3	1'-8	
W4	WINGWALL	5	2	5'-6	11'-0	3'-10	1'-8	
W5	WINGWALL	5	2	5'-1	10'-2	3'-5	1'-8	
W6	WINGWALL	5	2	4'-8	9'-4	3'-0	1'-8	
W7	WINGWALL	5	2	4'-3	8'-6	2'-7	1'-8	
W8	WINGWALL	5	2	8'-4	16'-8			
W9	WINGWALL	4	2	2'-0	4'-0	2'-0		
W10	WINGWALL	4	2	4'-4	8'-8	4'-4		
W11	WINGWALL	4	2	6'-8	13'-4	6'-8		
W12	WINGWALL	4	4	9'-4	37'-4			
E1	ENDWALL	4	3	15'-0	45'-0			
E2	ENDWALL	4	4	4'-2	16'-8			

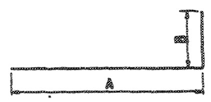

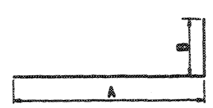

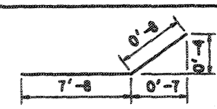

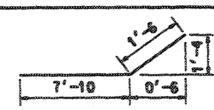

MARK	LOCATION	SIZE NO.	NO. BARS	LENGTH	TOTAL LENGTH	SKETCH

MARK	LOCATION	SIZE NO.	NO. BARS	LENGTH	TOTAL LENGTH	SKETCH

SUMMARY OF COATED BARS

285'-6 OF NUMBER 4 BARS AT	0.668 LBS/FT =		190.7 LBS
224'-8 OF NUMBER 5 BARS AT	1.043 LBS/FT =		234.3 LBS
		TOTAL	425.0 LBS

NOTES:

ALL BARS ARE COATED

BAR SIZES ARE U.S. UNITS.

REINFORCING STEEL DIMENSIONS ARE OUT TO OUT OF BAR UNLESS OTHERWISE SPECIFIED.

SPLICES MAY BE OMITTED AT FABRICATORS OPTION...HOWEVER, IN SUCH CASE, FABRICATOR ASSUMES RESPONSIBILITY FOR FIT.

REBAR QUANTITIES ARE FOR INFORMATION ONLY AND COST OF REBAR IS INCLUDED HEADWALL BID ITEM.

REVISIONS

NO.	DATE	BY	REMARKS

UTAH DEPARTMENT OF TRANSPORTATION
SALT LAKE CITY, UTAH
STRUCTURES DIVISION

DESIGN RH 1/03 CHECK HCB 1/03
DRAWN VH 1/03 CHECK RH 1/03
QUANT. RH 1/03 CHECK VH 1/03

APPROVAL RECOMM. ____ DATE ____ SENIOR DESIGN ENGR.
APPROVED FOR USE BY UDOT ____ DATE ____ UDOT BRIDGE ENGR.

WASHINGTON INTERCHANGE
AT RP 13
54" DIA. PIPE HEAD WALL

PROJECT NUMBER * SP-15-1(20)13

WASHINGTON
COUNTY

H-2009
DRG. NO.

SHT. 2 OF 2

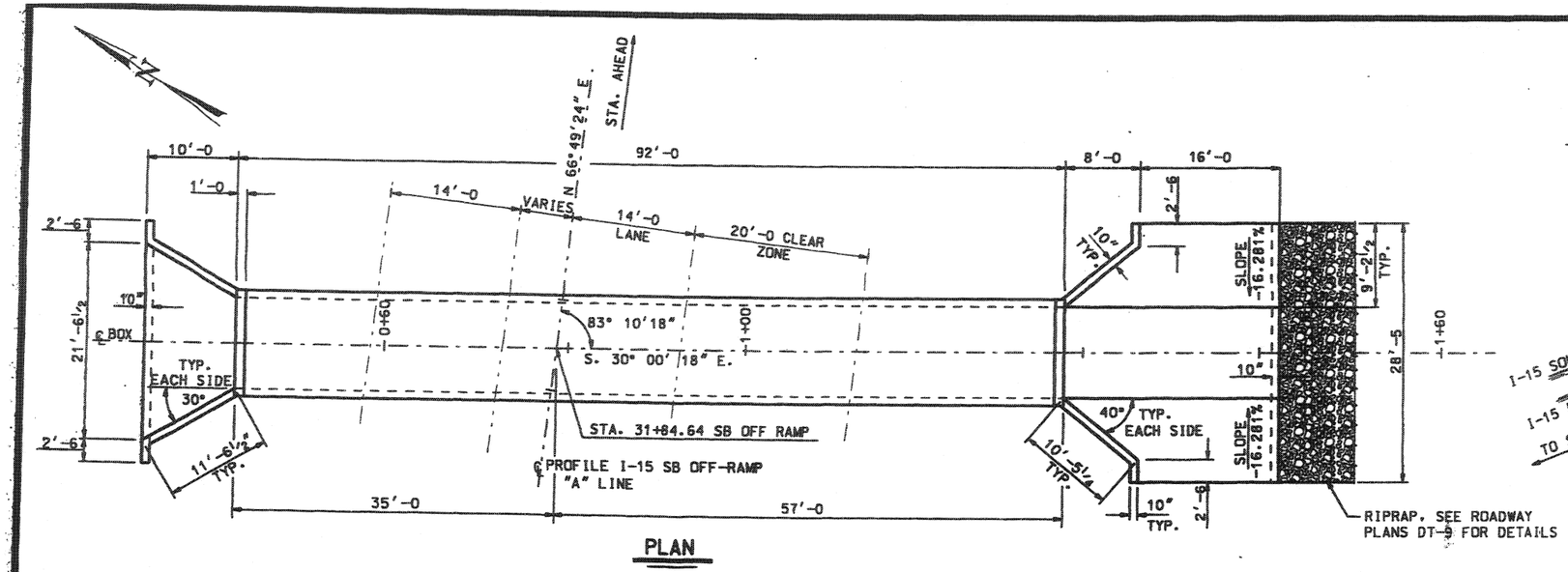

PLAN

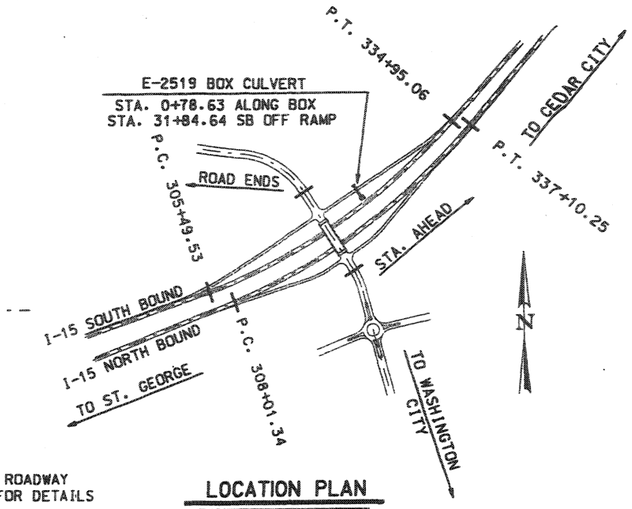

LOCATION PLAN

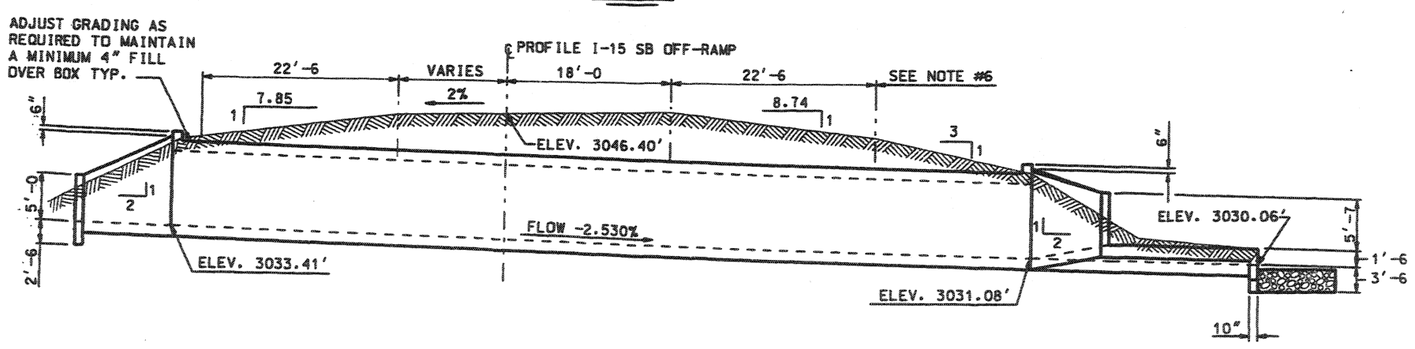

ELEVATION

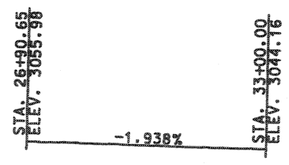

I-15 SB OFF RAMP PROFILE "A" LINE

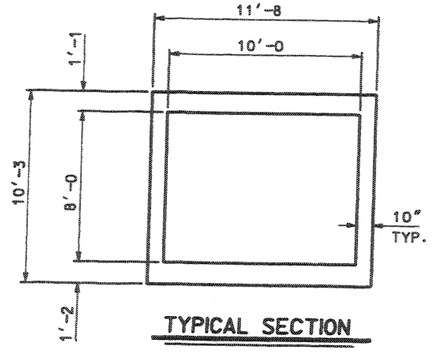

TYPICAL SECTION

HYDRAULIC DATA

1.	DRAINAGE AREA	0.29 sq. mi
2.	INLET FLOWLINE ELEVATION	3033.59 ft
3.	OUTLET FLOWLINE ELEVATION	3030.79 ft
4.	DESIGN FREQUENCY	50 yr
5.	DESIGN DISCHARGE (Qd)	251 cfs
6.	INLET WATER SURFACE ELEVATION FOR Qd	3039.06 ft
7.	OUTLET WATER SURFACE ELEVATION FOR Qd	3033.59 ft
8.	OUTLET VELOCITY FOR Qd	17.92 ft/sec
9.	100 YR DISCHARGE (Q_{100})	315 cfs
10.	INLET WATER SURFACE ELEVATION FOR (Q_{100})	3039.75 ft
11.	OUTLET WATER SURFACE ELEVATION FOR (Q_{100})	3033.89 ft
12.	OVERTOPPING DISCHARGE (Q_{OVER})	* cfs
13.	FREQUENCY OF (Q_{OVER}) 500-YEAR MAX	500* yr
14.	OVERTOPPING ELEVATION	* ft

NOTES

1. USE COATED DEFORMED BILLET STEEL REINFORCING STEEL BARS CONFORMING TO AASHTO M 284, OR M 111, AND M 31 GRADE 60, RESPECTIVELY.
2. CHAMFER EXPOSED CONCRETE CORNERS ¾" EXCEPT WHERE NOTED OTHERWISE.
3. PROVIDE 2" COVER TO REINFORCING STEEL EXCEPT WHERE NOTED OTHERWISE.
4. USE CLASS AA(AE) CONCRETE EXCEPT WHERE SPECIFIED OTHERWISE.
5. USE TYPE II CEMENT (LOW ALKALI).
6. DIMENSIONS AND SLOPES ARE PERPENDICULAR TO CENTERLINE I-15 SB OFF RAMP ("A" LINE)

INDEX OF SHEETS

1- SITUATION AND LAYOUT
2- BARREL DETAILS
3- INLET DETAILS
4- OUTLET DETAILS
5- REINFORCING STEEL SCHEDULE

DESIGN DATA

HS-20 IN ACCORDANCE WITH CURRENT AASHTO LFD BRIDGE DESIGN SPECIFICATIONS AND INTERIM SPECIFICATIONS.
CAST-IN-PLACE CONCRETE: $f'c$ = 3650 PSI; fy (REINF.) = 60,000 PSI;
CLASS AA (AE) n = 8
DESIGN COVER : 0 TO 14'-0

QUANTITIES

ITEM	ESTIM.	UNIT	AS CONST.
STRUCTURAL CONCRETE (EST.QTY. 184 yds^3)	1	LUMP	
REINFORCING STEEL - COATED	26,193	LBS	

REVISIONS

NO.	DATE	BY	REMARKS

UTAH DEPARTMENT OF TRANSPORTATION
SALT LAKE CITY, UTAH
STRUCTURES DIVISION

DESIGN RH 03-03 CHECK HCB 07-03
DRAWN FJB 03-03 CHECK HCB 07-03
QUANT. FJB 03-03 CHECK RH 07-03

DESIGN ENGR. — DATE
BRIDGE ENGR. — DATE
APPROVAL RECOMM. — DATE
APPROVED FOR USE BY UDOT — DATE

WASHINGTON INTERCHANGE AT RP 13
10'-0 x 8'-0 BOX CULVERT
SITUATION AND LAYOUT
PROJECT NUMBER * SP-15-1(20)13

WASHINGTON COUNTY
E-2519 DRG. NO.
SHT. 1 OF 5

25-NOV-2003 DGN File:N:\Projects\2004\04Phase1\Structures\BOXES\e2519_Sht1-2b.dgn

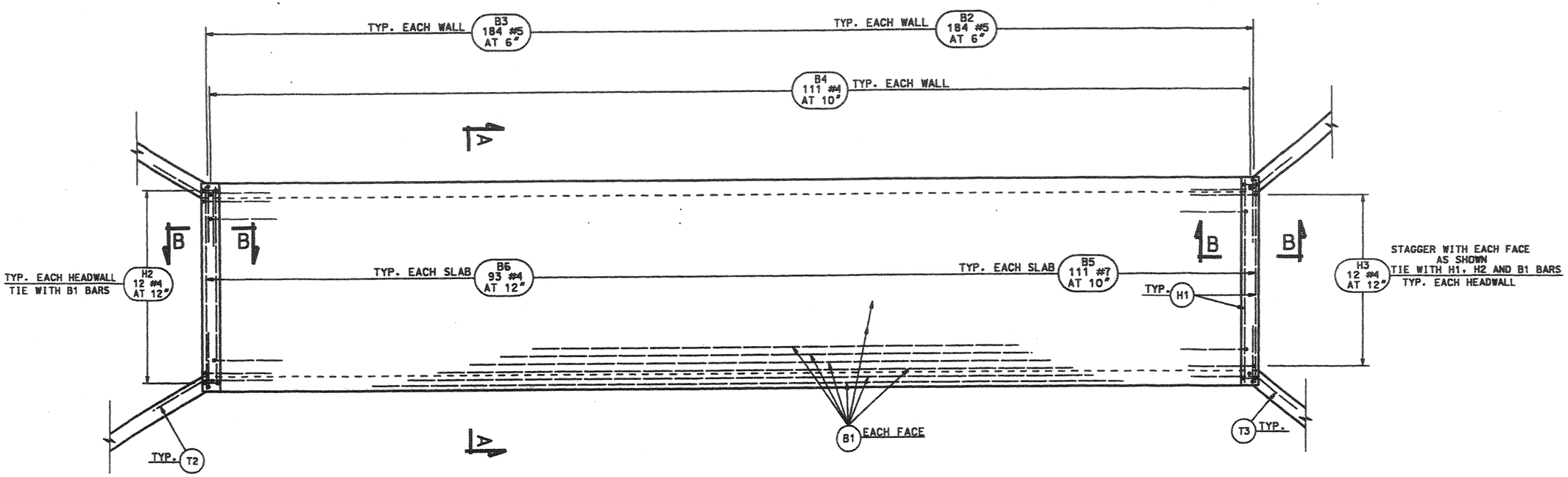

PLAN

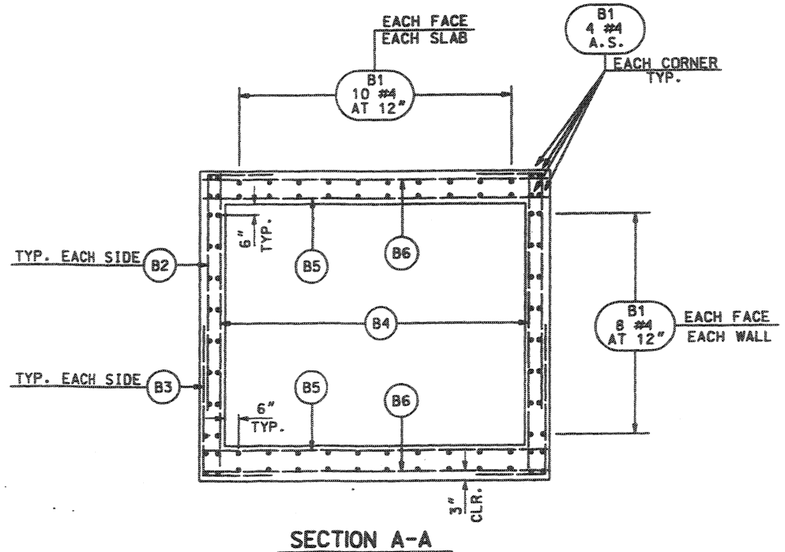

SECTION A-A

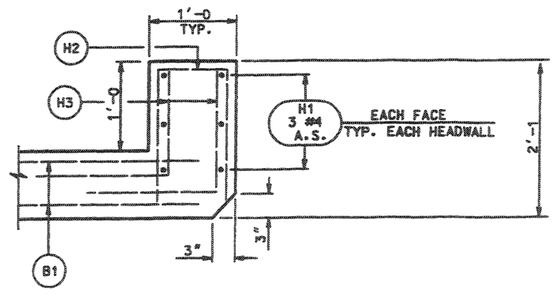

SECTION B-B

CONCRETE QUANTITIES	
LOCATION	TOTAL CU. YARDS
BARREL	135.0
HEADWALLS	0.9
TOTAL	135.9

UTAH DEPARTMENT OF TRANSPORTATION
SALT LAKE CITY, UTAH
STRUCTURES DIVISION

DESIGN RH 03-03 CHECK HCB 07-03
DRAWN FJB 03-03 CHECK HCB 07-03
QUANT. FJB 03-03 CHECK RH 07-03

APPROVAL RECOMM. DATE SENIOR DESIGN ENGR.
APPROVED FOR USE BY UDOT DATE UDOT BRIDGE ENGR.

NO.	DATE	BY	REVISIONS REMARKS

WASHINGTON INTERCHANGE AT RP 13
10'-0 x 8'-0 BOX CULVERT
BARREL DETAILS

PROJECT NUMBER * SP-15-1(20)13

WASHINGTON
COUNTY

E-2519
DRG. NO.

SHT. 2 OF 5

DGN File:N:\Projects\E2519_ES\Sheet_Files\Structures\BARREL\E-2519_SH12-20.dgn
N-2003

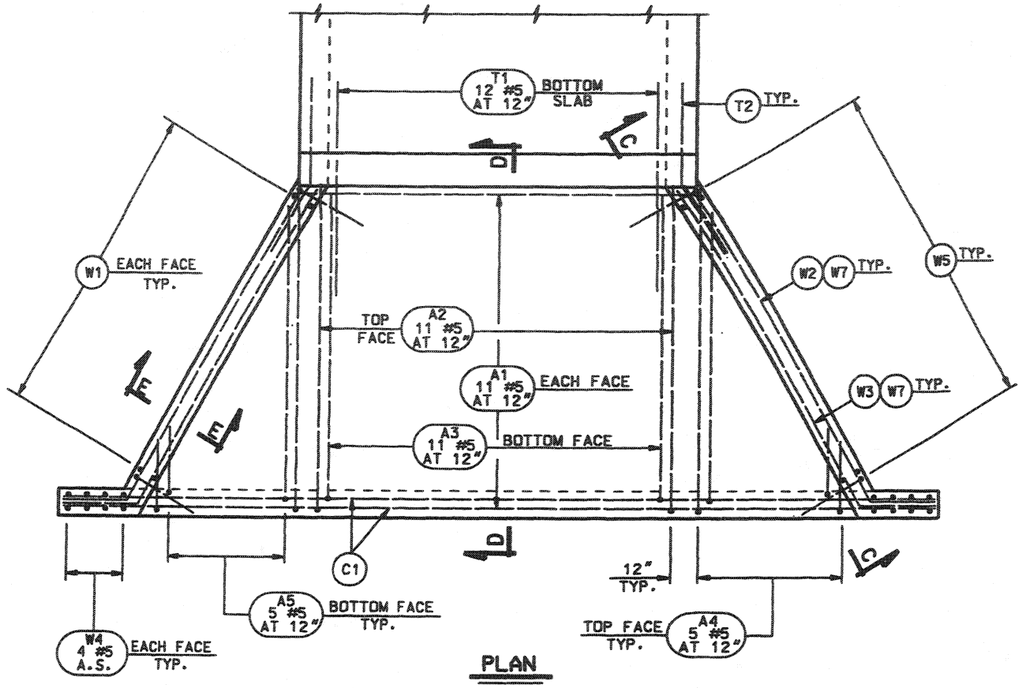

PLAN

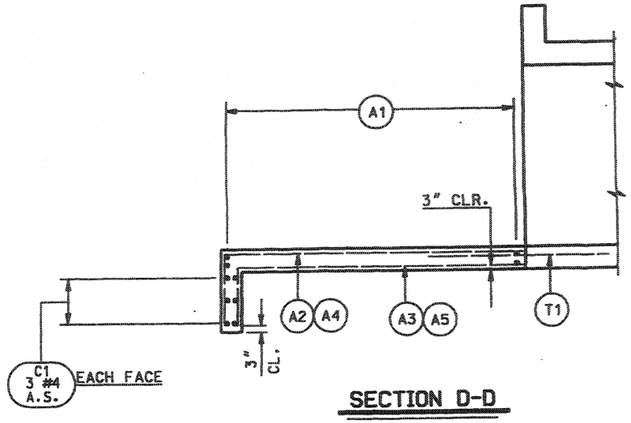

SECTION D-D

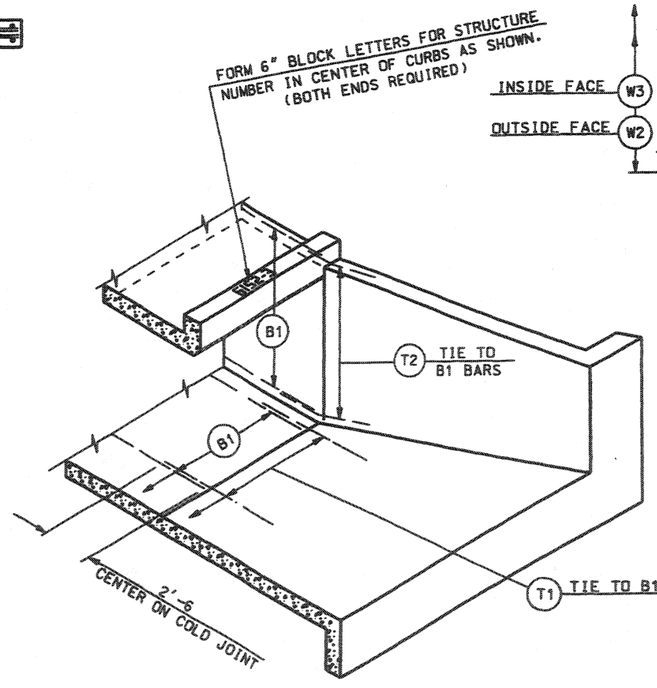

CUT SECTION PICTORIAL VIEW

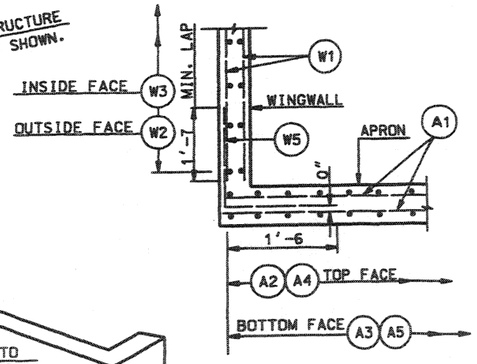

SECTION E-E

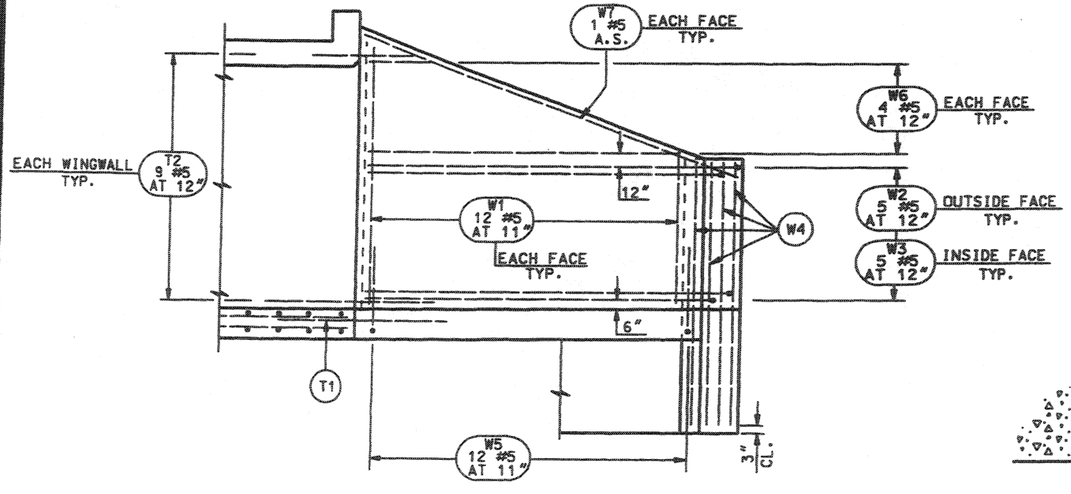

SECTION C-C

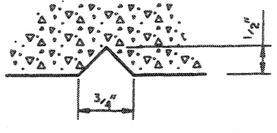

TYPICAL SECTION

THRU DRAWING NUMBER

CONCRETE QUANTITIES

LOCATION	TOTAL CU. YARDS
APRON	7.5
CUT-OFF-WALL	1.1
WINGWALLS	5.2
EXTENSION WALLS	1.0
TOTAL	14.8

REVISIONS

NO.	DATE	BY	REMARKS

UTAH DEPARTMENT OF TRANSPORTATION
SALT LAKE CITY, UTAH
STRUCTURES DIVISION

DESIGN RH 03-03 CHECK HCB 07-03
DRAWN FJB 03-03 CHECK HCB 07-03
QUANT. FJB 03-03 CHECK RH 07-03

ORIGINAL REVISION — DATE — SENIOR BRIDGE ENGR.
APPROVED FOR USE BY UDOT — DATE — UDOT BRIDGE ENGR.

WASHINGTON INTERCHANGE AT RP 13
10'-0 x 8'-0 BOX CULVERT
INLET DETAILS

PROJECT NUMBER * SP-15-1(20)13

WASHINGTON
COUNTY

E-2519
DRG. NO.

SHT. 3 OF 5

DGN: Files\NAProjects\2928.6\Sheet Files\Structures\BOXES\2928_E-2519_SHT3-20.dgn
25-NOV-2013

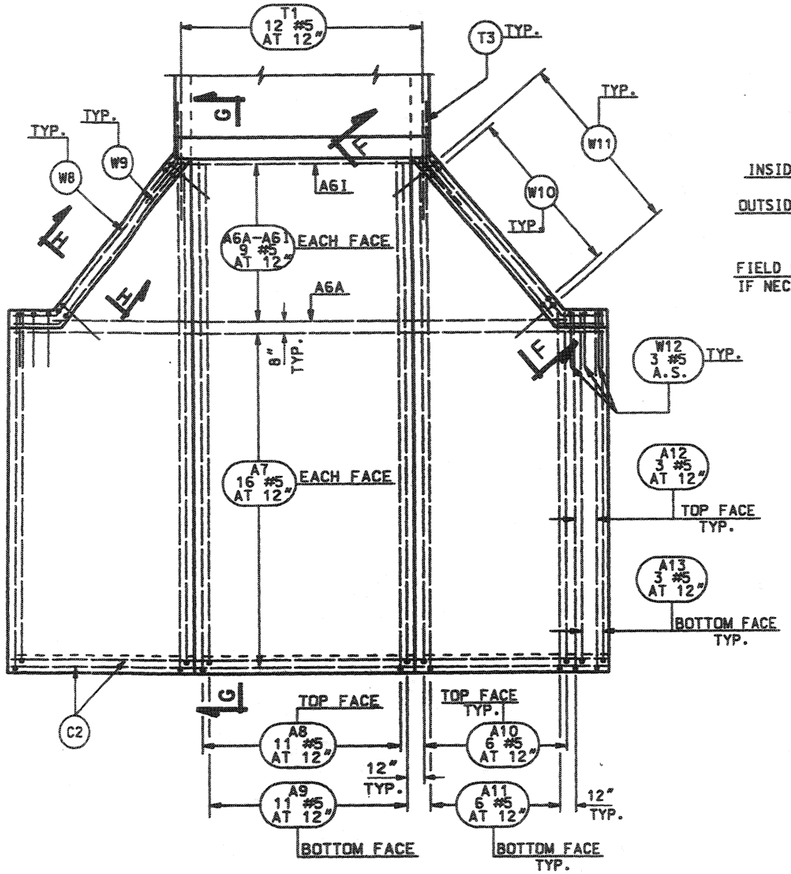

OUTLET PLAN

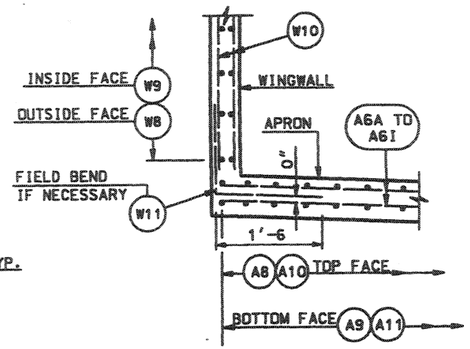

SECTION H-H

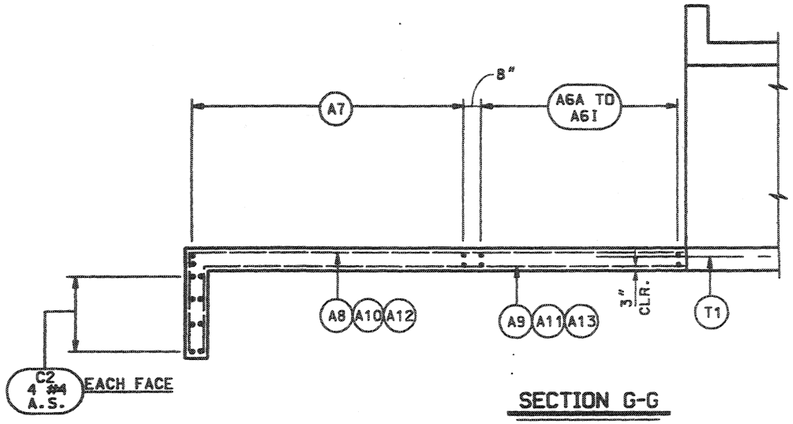

SECTION G-G

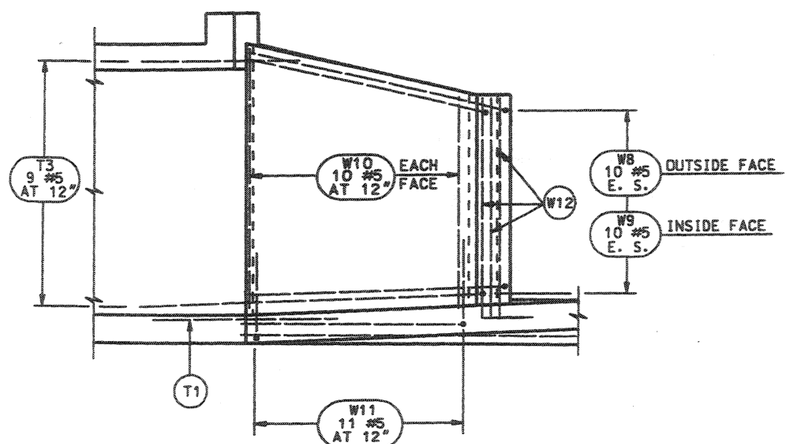

SECTION F-F

NOTE:
1. E. S. IS EQUAL SPACES.

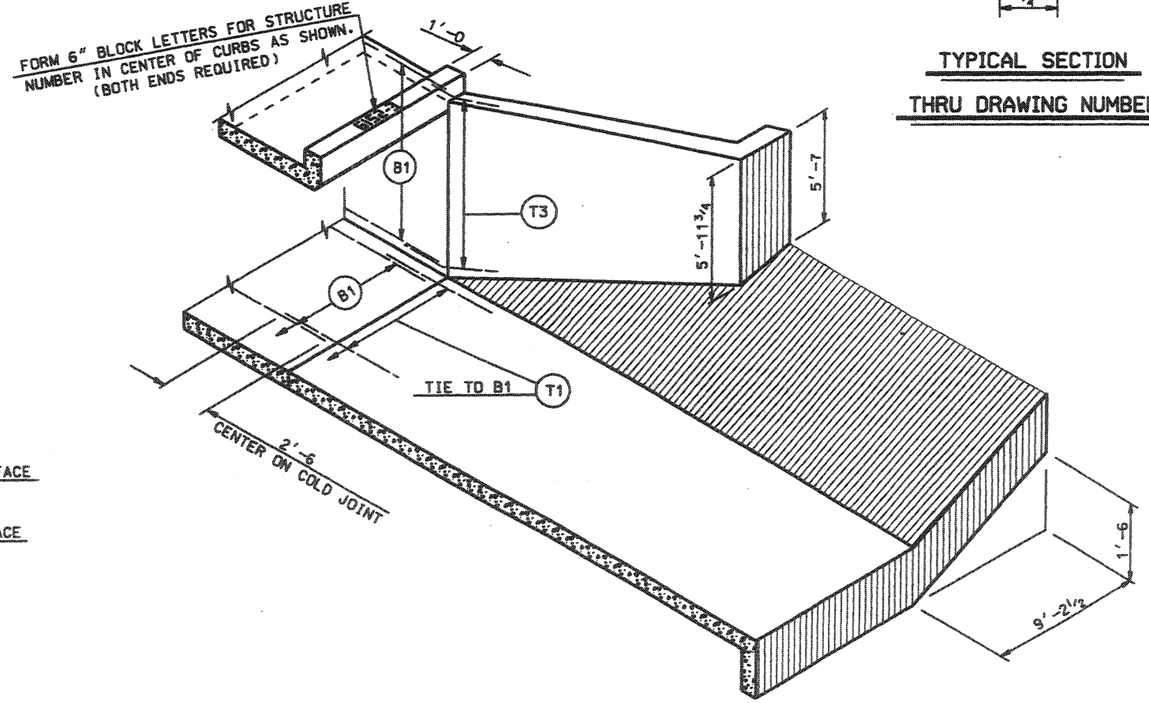

PICTORIAL VIEW

(SYMMETRIC ABOUT CENTERLINE OF BOX)

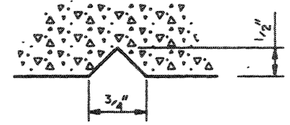

TYPICAL SECTION

THRU DRAWING NUMBER

CONCRETE QUANTITIES	
LOCATION	TOTAL CU. YARDS
APRON	25.5
CUT-OFF-WALL	2.03
WINGWALLS	5.0
EXTENSION WALLS	1.1
TOTAL	33.63

REVISIONS

NO.	DATE	BY	REMARKS

UTAH DEPARTMENT OF TRANSPORTATION
SALT LAKE CITY, UTAH
STRUCTURES DIVISION

DESIGN RH 03-03 CHECK HCB 07-03
DRAWN FJB 03-03 CHECK HCB 07-03
QUANT. FJB 03-03 CHECK RH 07-03

APPROVAL RECOMM. — SENIOR DESIGN ENGR. — DATE
APPROVED FOR USE BY UDOT — UNDIV. BRIDGE ENGR. — DATE

WASHINGTON INTERCHANGE AT RP 13
10'-0 x 8'-0 BOX CULVERT
OUTLET DETAILS

PROJECT NUMBER * SP-15-1(20)13

WASHINGTON COUNTY

E-2519 DRG. NO.

SHT. 4 OF 5

DGN File:N:\Projects\2528.03\Sheet_Files\Structures\BOXES\2528_E-2519_SHT4-20.dgn

MARK	LOCATION	SIZE NO.	NO. BARS	LENGTH	TOTAL LENGTH	SKETCH
B1	BARREL	4	88	96'-8	8,506'-8	2'-6 / 91'-8 — 2 SPLICE(S) REQ'D

						A	B
B2	BARREL	5	368	8'-11	3,282'-7	6'-5	2'-6
B3	BARREL	5	368	7'-6	2,760'-0	5'-0	2'-6

						A
B4	BARREL	4	222	9'-10	2,183'-0	9'-10
B5	BARREL	7	222	11'-2	2,479'-9	11'-2
B6	BARREL	4	186	11'-2	2,077'-7	11'-2

A1	APRON	5	11	34'-7	380'-9	22'-11 / 11'-9 — CUT LINE — 11'-9 / 22'-11 — 11 BAR(S) PER SET, 1 SET(S) REQ'D

						A	B
A2	APRON	5	11	11'-9	129'-3	9'-8	2'-1
A3	APRON	5	11	10'-6	115'-6	9'-2	1'-4

						A	B	C	D	E
A4	APRON	5	5	16'-1	80'-5	9'-5	2'-6	2'-1	5	1
A5	APRON	5	5	13'-7	67'-11	8'-11	2'-0	1'-4	5	1

C, A, B, C, CUT LINE, C, B, A, C
D = NO. BAR(S) PER SET
E = NO. SET(S) REQ'D

						A	B	C	D	E	F	G
A6A	APRON	5	2	26'-8	53'-4	10'-0	7'-7	7'-7	1'-6	1	7'-6	1'-2
A6B	APRON	5	2	25'-0	50'-0	10'-0	6'-9	6'-9	1'-6	1	6'-8	1'-0
A6C	APRON	5	2	23'-4	46'-8	10'-0	5'-11	5'-11	1'-6	1	5'-10	0'-11
A6D	APRON	5	2	21'-8	43'-4	10'-0	5'-1	5'-1	1'-6	1	5'-0	0'-9
A6E	APRON	5	2	19'-10	39'-8	10'-0	4'-2	4'-2	1'-6	1	4'-2	0'-7
A6F	APRON	5	2	18'-2	36'-4	10'-0	3'-4	3'-4	1'-6	1	3'-4	0'-5
A6G	APRON	5	2	16'-6	33'-0	10'-0	2'-6	2'-6	1'-6	1	2'-6	0'-3
A6H	APRON	5	2	14'-10	29'-8	10'-0	1'-8	1'-8	1'-6	1	1'-8	0'-0

H, B, D, C, G, J, A, F
E = NO. SPLICE(S) REQ'D

A6I	APRON	5	2	11'-9	23'-6
A7	APRON	5	34	28'-2	958'-10

1'-6, 9'-1, 9'-1, 1'-6, 9'-0, 10'-0, 9'-0

						A	B
A8	APRON	5	11	26'-9	294'-3	23'-8	3'-1
A9	APRON	5	11	25'-6	280'-6	23'-2	2'-4

B, A

MARK	LOCATION	SIZE NO.	NO. BARS	LENGTH	TOTAL LENGTH	SKETCH

						A	B	C	D	E
A10	APRON	5	6	47'-7	285'-6	23'-8	17'-9	3'-1	6	1
A11	APRON	5	6	45'-1	270'-6	23'-2	17'-3	2'-4	6	1

C, A, B, C, CUT LINE, C, B, A, C
D = NO. BAR(S) PER SET
E = NO. SET(S) REQ'D

						A	B
A12	APRON	5	6	18'-7	111'-6	16'-6	2'-1
A13	APRON	5	6	17'-4	104'-0	16'-0	1'-4

B, A

W1	WINGWALL	5	24	14'-0	336'-0

9'-0, 5'-0, CUT LINE, 5'-0, 9'-0
12 BAR(S) PER SET, 2 SET(S) REQ'D

						A	B	C	D
W2	WINGWALL	5	10	12'-8	127'-0	10'-9	1'-11	1'-0	1'-8
W3	WINGWALL	5	10	13'-5	134'-2	11'-3	2'-2	1'-1	1'-11

B, D, A, C

W4	WINGWALL	5	16	7'-1	113'-4
W5	WINGWALL	5	24	5'-2	124'-1

3'-6, 1'-6

W6	WINGWALL	5	16	5'-7	89'-4

9'-2, CUT LINE, 2'-0
4 BAR(S) PER 1/2 SET, 4 1/2 SET(S) REQ'D

W7	WINGWALL	5	4	11'-10	47'-4

						A	B	C	D
W8	WINGWALL	5	20	11'-4	226'-8	9'-4	2'-0	1'-4	1'-6
W9	WINGWALL	5	20	12'-3	245'-2	10'-0	2'-3	1'-5	1'-9

B, D, A, C

W10	WINGWALL	5	20	15'-1	301'-8

9'-4, 5'-9, CUT LINE, 5'-9, 9'-4
10 BAR(S) PER SET, 2 SET(S) REQ'D

W11	WINGWALL	5	22	5'-0	110'-0

1'-6, 3'-6

W12	WINGWALL	5	3	15'-5	46'-3

1'-6, 6'-4, 6'-1, 1'-6, CUT LINE, 1'-6, 6'-1, 6'-4, 1'-6
3 BAR(S) PER SET, 1 SET(S) REQ'D

C1	CUTOFF WALL	4	6	26'-3	157'-3

MARK	LOCATION	SIZE NO.	NO. BARS	LENGTH	TOTAL LENGTH	SKETCH
C2	CUTOFF WALL	4	6	28'-2	169'-0	1'-6, 9'-1, 9'-1, 1'-6, 9'-0, 10'-0, 9'-0
T1	TIE BAR	5	24	5'-0	120'-0	
T2	TIE BAR	5	18	5'-0	90'-0	2'-6, 1'-3, 2'-6, 2'-2
T3	TIE BAR	5	18	5'-0	90'-0	2'-6, 1'-7, 2'-6, 1'-11
H1	HEADWALL	4	12	11'-4	136'-0	
H2	HEADWALL	4	24	3'-8	88'-1	1'-6, 1'-6, 0'-8
H3	HEADWALL	4	24	3'-0	72'-0	1'-6, 1'-6

SUMMARY OF COATED BARS

13,389'-7 OF NUMBER	4 BARS AT	0.668 LBS/FT =	8,944.2 LBS	
11,678'-0 OF NUMBER	5 BARS AT	1.043 LBS/FT =	12,180.1 LBS	
2,479'-9 OF NUMBER	7 BARS AT	2.044 LBS/FT =	5,068.6 LBS	
		TOTAL	26,193.0 LBS	

NOTES:
ALL BARS ARE COATED
BAR SIZES ARE U.S. UNITS.
REINFORCING STEEL DIMENSIONS ARE OUT TO OUT OF BAR UNLESS OTHERWISE SPECIFIED.
SPLICES MAY BE OMITTED AT FABRICATORS OPTION...HOWEVER, IN SUCH CASE, FABRICATOR ASSUMES RESPONSIBILITY FOR FIT.

NO.	DATE	BY	REMARKS

REVISIONS

UTAH DEPARTMENT OF TRANSPORTATION
SALT LAKE CITY, UTAH
STRUCTURES DIVISION

DESIGN RH 03-03 CHECK HCB 07-03
DRAWN FJB 03-03 CHECK HCB 07-03
QUANT. FJB 03-03 CHECK RH 07-03

APPROVAL RECOMM. — SENIOR DESIGN ENGR. — DATE
APPROVED FOR USE BY UDOT — UDOT BRIDGE ENGR. — DATE

WASHINGTON INTERCHANGE AT RP 13
10'-0 x 8'-0 BOX CULVERT
REINFORCING STEEL SCHEDULE

PROJECT NUMBER * SP-15-1(20)13

WASHINGTON COUNTY

E-2519 DRG. NO.

SHT. 5 OF 5

DGN: F:\Art\N\Projects\2828.03\Sheets\Files\Structural\PDFES\2828.6-2519-SHTS_REBAR-20.dgn
28-NOV-2003

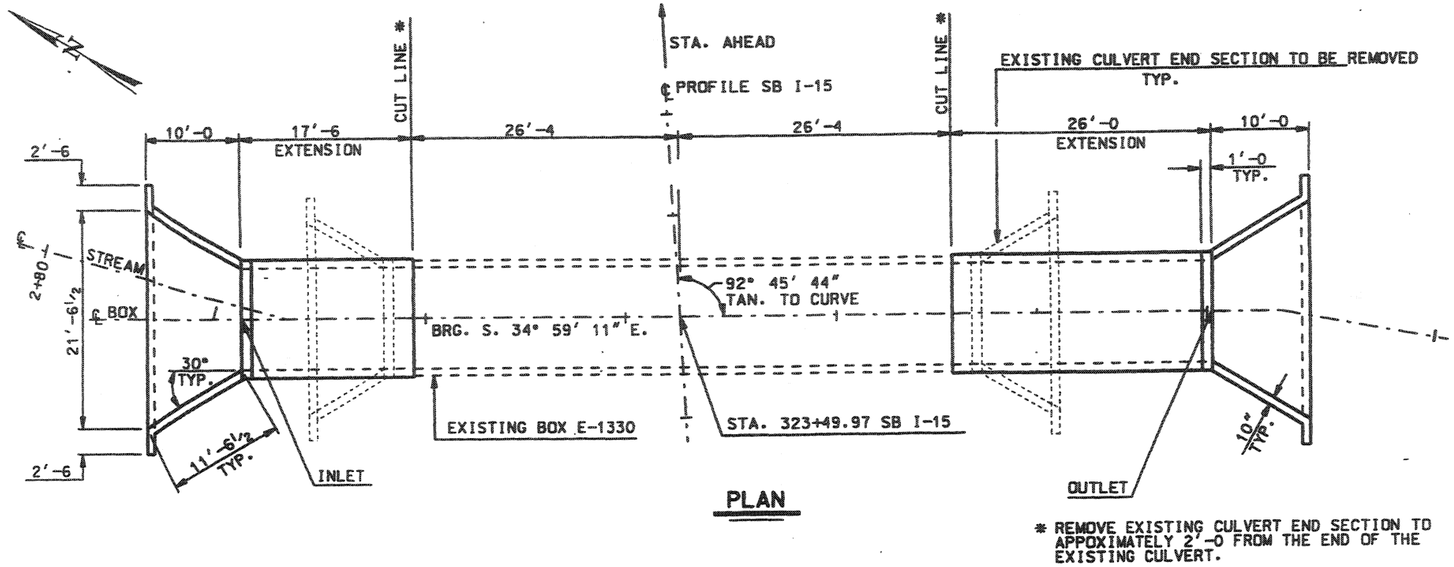

PLAN

* REMOVE EXISTING CULVERT END SECTION TO APPOXIMATELY 2'-0 FROM THE END OF THE EXISTING CULVERT.

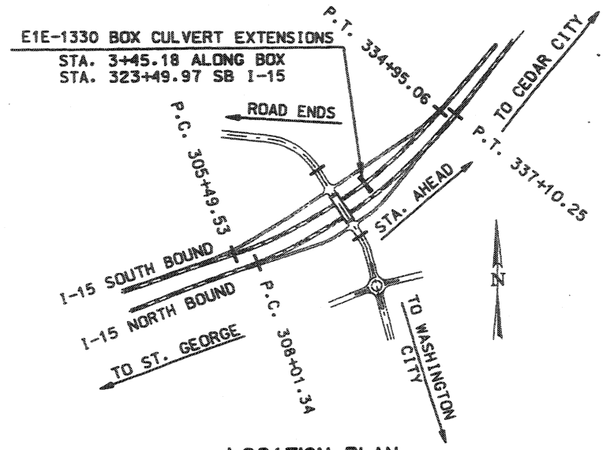

LOCATION PLAN

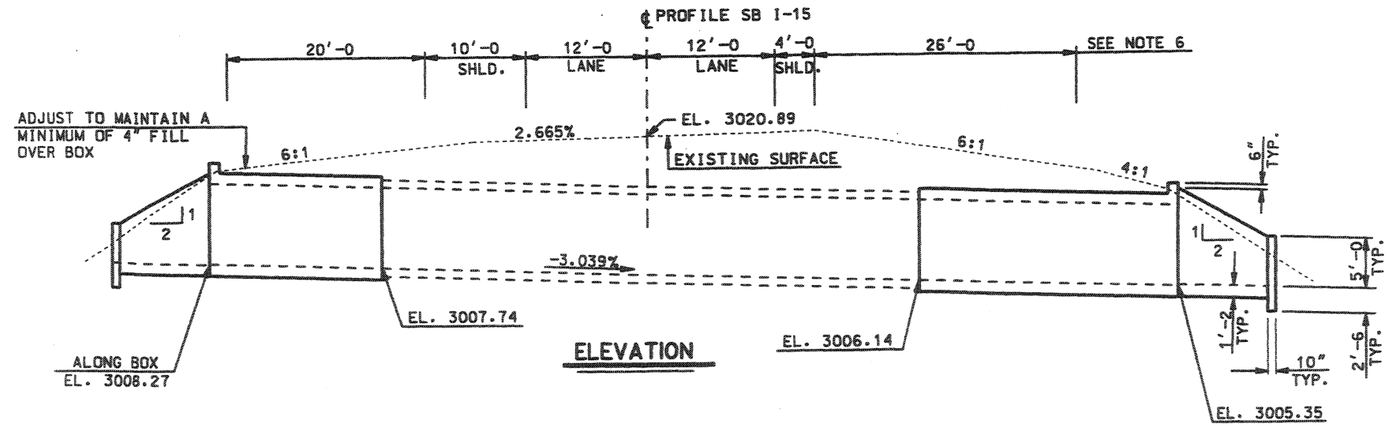

ELEVATION

NOTES

1. USE COATED DEFORMED BILLET STEEL REINFORCING STEEL BARS CONFORMING TO AASHTO M 284, OR M 111, AND M 31 GRADE 60, RESPECTIVELY.
2. CHAMFER EXPOSED CONCRETE CORNERS ¾" EXCEPT WHERE NOTED OTHERWISE.
3. PROVIDE 2" COVER TO REINFORCING STEEL EXCEPT WHERE NOTED OTHERWISE.
4. USE CLASS AA(AE) CONCRETE EXCEPT WHERE SPECIFIED OTHERWISE.
5. USE TYPE II CEMENT (LOW ALKALI).
6. DIMENSIONS AND SLOPES ARE PERPENDICULAR TO CENTERLINE SB I-15.

I-15 SB CURVE DATA

PC STA. 305+49.53
N = 199912.25
E = 99528.84
Δ = 29°27'19" L
R = 5729.60'
D = 1°00'00"
T = 1506.08'
L = 2945.53'
PI STA. 320+55.62
N = 200421.04
E = 100946.38

INDEX OF SHEETS

1- SITUATION AND LAYOUT
2- BARREL DETAILS
3- END DETAILS
4- REINFORCING STEEL SCHEDULE

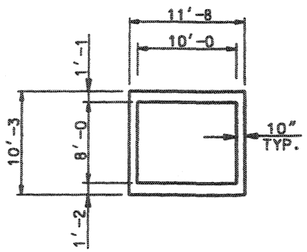

TYPICAL SECTION

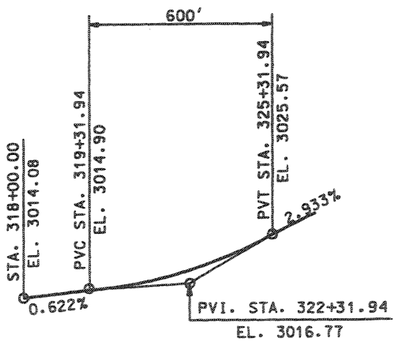

I-15 SB PROFILE

HYDRAULIC DATA

1.	DRAINAGE AREA	0.29 sq. mi
2.	INLET FLOWLINE ELEVATION	3008.27 ft
3.	OUTLET FLOWLINE ELEVATION	3005.35 ft
4.	DESIGN FREQUENCY	50 yr
5.	DESIGN DISCHARGE (Qd)	251 cfs
6.	INLET WATER SURFACE ELEVATION FOR Qd	3012.08 ft
7.	OUTLET WATER SURFACE ELEVATION FOR Qd	3006.94 ft
8.	OUTLET VELOCITY FOR Qd	16.73 ft/sec
9.	100 YR DISCHARGE (Q_{100})	315 cfs
10.	INLET WATER SURFACE ELEVATION FOR (Q_{100})	3012.75 ft
11.	OUTLET WATER SURFACE ELEVATION FOR (Q_{100})	3007.23 ft
12.	OVERTOPPING DISCHARGE (Q_{OVER})	* cfs
13.	FREQUENCY OF (Q_{OVER}) 500-YEAR MAX	500* yr
14.	OVERTOPPING ELEVATION	* ft

DESIGN DATA

HS-20 IN ACCORDANCE WITH CURRENT AASHTO LFD BRIDGE DESIGN SPECIFICATIONS AND INTERIM SPECIFICATIONS.

CAST-IN-PLACE CONCRETE: CLASS AA (AE) — $f'c$ = 3650 PSI; fy (REINF.) = 60,000 PSI; n = 8

DESIGN COVER : 0 TO 14'-0

QUANTITIES

ITEM	ESTIM.	UNIT	AS CONST.
STRUCTURAL CONCRETE (EST.QTY. 95 yds³)	1	LUMP	
REINFORCING STEEL - COATED	13,860	LBS	
REMOVE CULVERT END SECTION	2	EACH	

REVISIONS

NO.	DATE	BY	REMARKS

UTAH DEPARTMENT OF TRANSPORTATION
SALT LAKE CITY, UTAH
STRUCTURES DIVISION

DESIGN RH 02-03 CHECK HCB 7-03
DRAWN FJB 02-03 CHECK HCB 7-03
QUANT. FJB 02-03 CHECK RH 7-03

APPROVAL RECOMM. — DATE — SENIOR SYSTEM ENGR.
APPROVED FOR USE BY UDOT — DATE — UDOT BRIDGE ENGR.

WASHINGTON INTERCHANGE AT RP 13
8'-0 x 10'-0 BOX CULVERT
SITUATION AND LAYOUT

PROJECT NUMBER * SP-15-1(20)13

WASHINGTON COUNTY

E1E-1330 DRG. NO.

SHT. 1 OF 4

DGN: Files:NA\Projects\2828.03\Sheet Files\Structures\BOXES\2828_E1E-1330_SHT1-20.dgn

02-2893

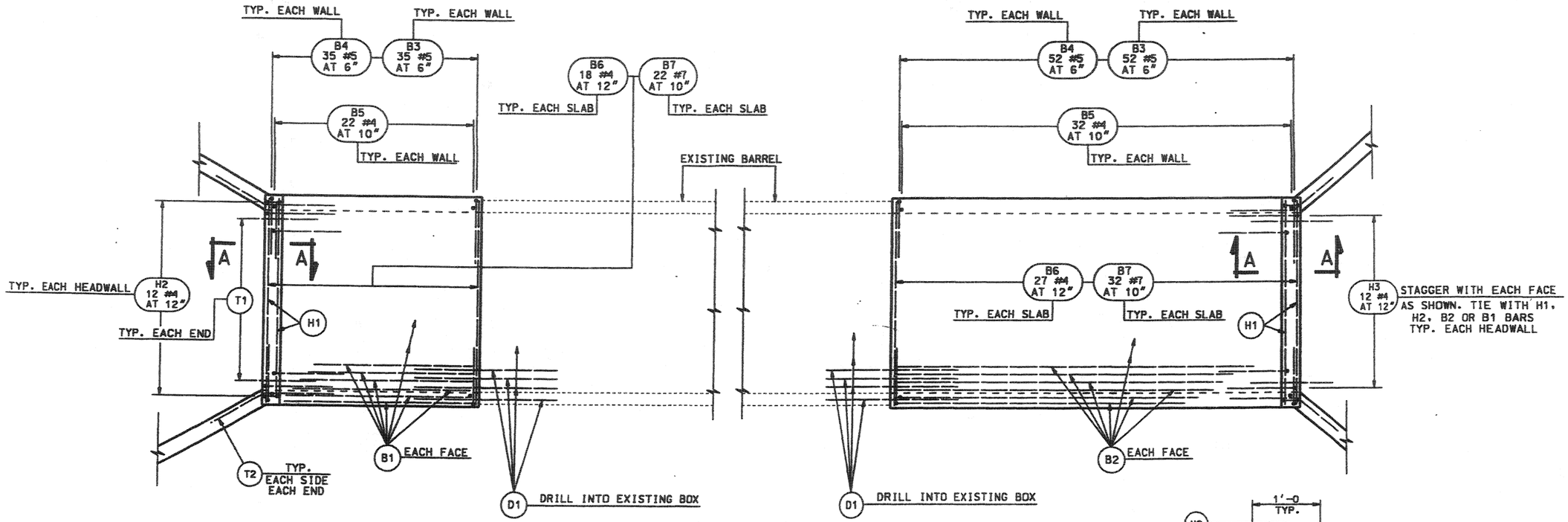

PLAN

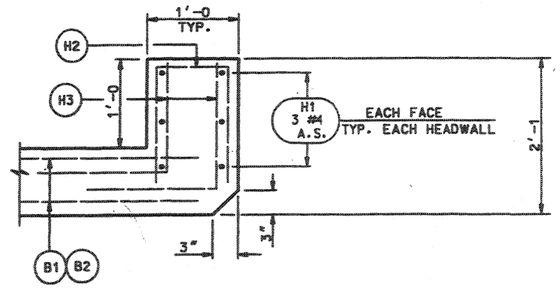

SECTION A-A

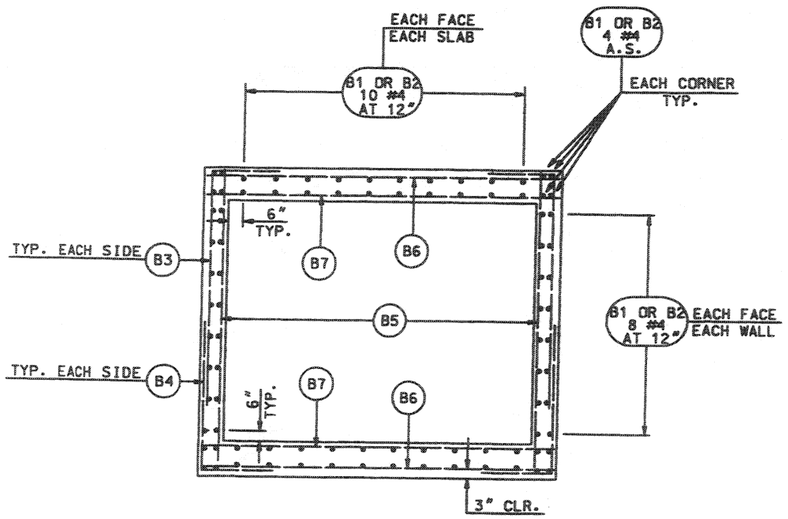

TYPICAL SECTION THRU BOX

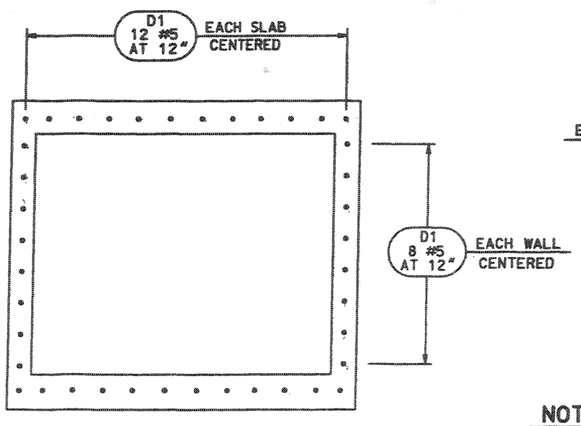

DOWEL DETAILS

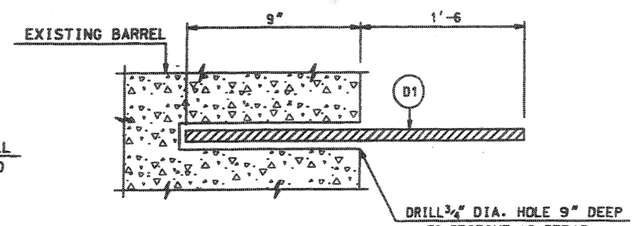

DOWEL EMBEDMENT DETAIL

NOTE

1. EMBED DOWELS WITH APPROVED ADHESIVE. EPOXY ANCHORAGE MUST DEVELOP A MINIMUM PULLOUT STRENGTH OF 19 KIPS.

CONCRETE QUANTITIES	
LOCATION	TOTAL CU. YARDS
BARREL	64.0
HEADWALLS	0.9
TOTAL	64.9

REVISIONS

NO.	DATE	BY	REMARKS

UTAH DEPARTMENT OF TRANSPORTATION
SALT LAKE CITY, UTAH
STRUCTURES DIVISION

DESIGN RH 02-03 | CHECK HCB 7-03
DRAWN FJB 02-03 | CHECK HCB 7-03
QUANT. FJB 02-03 | CHECK RH 7-03

APPROVAL RECOMM. DATE — REGION RESTON ENGR.
APPROVED FOR USE BY COUNT DATE — UDOT BRIDGE ENGR.

WASHINGTON INTERCHANGE AT RP 13
8'-0 x 10'-0 BOX CULVERT
BARREL DETAILS

PROJECT NUMBER * SP-15-1(20)13

WASHINGTON
COUNTY

E1E-1330
DRG. NO.

SHT. 2 OF 4

DGN: Files\NVProjects\2028.dgn\Sheet Files\Structure\NDOES\SV2028_E1E-1330_Sht2-20.dgn
28-NOV-2003

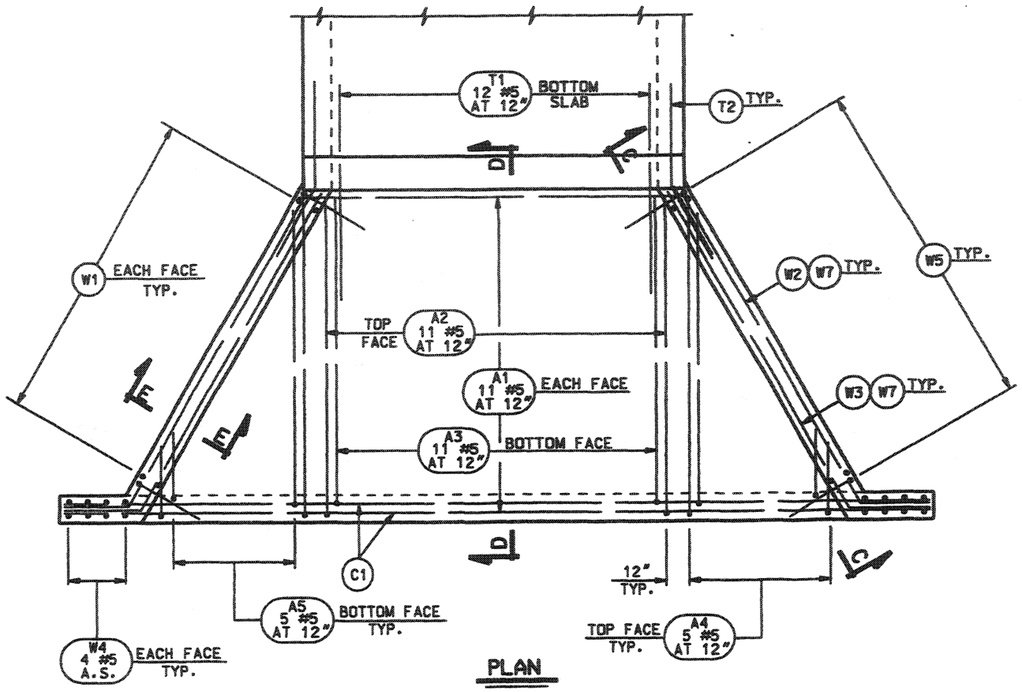

PLAN

BOTH ENDS TYPICAL

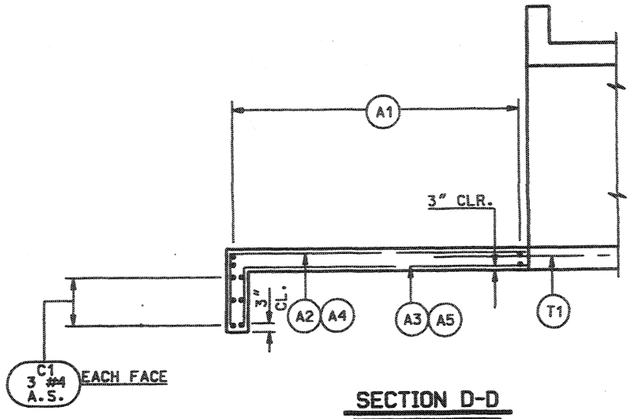

SECTION D-D

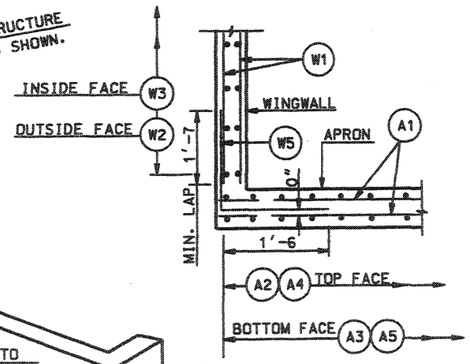

SECTION E-E

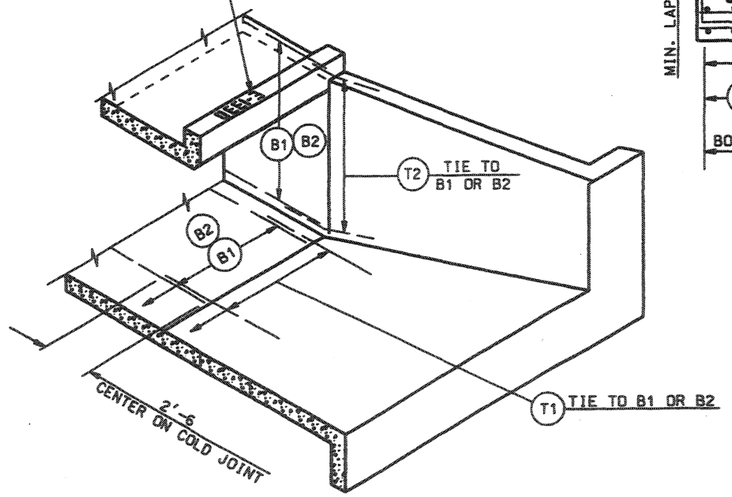

CUT SECTION PICTORIAL VIEW

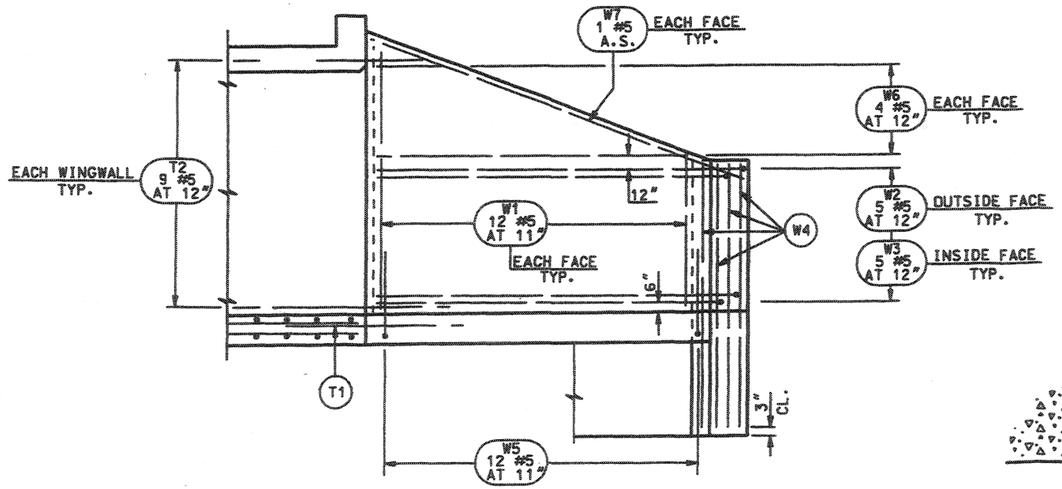

SECTION C-C

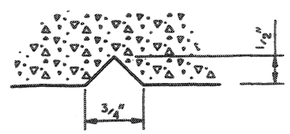

TYPICAL SECTION

THRU DRAWING NUMBER

CONCRETE QUANTITIES	
LOCATION	TOTAL CU. YARDS
APRONS	15.1
CUT-OFF-WALLS	2.2
WINGWALLS	10.4
EXTENSION WALLS	1.9
	TOTAL 29.6

UTAH DEPARTMENT OF TRANSPORTATION
SALT LAKE CITY, UTAH
STRUCTURES DIVISION

NO.	DATE	BY	REVISIONS REMARKS

DESIGN RH 02-03 CHECK HCB 7-03
DRAWN FJB 02-03 CHECK HCB 7-03
QUANT. FJB 02-03 CHECK RH 7-03

ORIGINAL RECORD — DATE — SENIOR BRIDGE ENGR.
APPROVED FOR USE BY UDOT — DATE — UDOT BRIDGE ENGR.

WASHINGTON INTERCHANGE AT RP 13
8'-0 x 10'-0 BOX CULVERT
END DETAILS

PROJECT NUMBER * SP-15-1(20)13

WASHINGTON
COUNTY

E1E-1330
DRG. NO.

SHT. 3 OF 4

DGN File:N:\Projects\2024 RS\Sheets_Files\Structures\BRIDGES\RS1330_SHT3-20.dgn
15-JUL-2024

MARK	LOCATION	SIZE NO.	NO. BARS	LENGTH	TOTAL LENGTH	SKETCH
B1	BARREL	4	88	17'-2	1,511'-0	
B2	BARREL	4	88	25'-8	2,259'-0	
B3	BARREL	5	174	8'-11	1,552'-1	2'-6 / 6'-5
B4	BARREL	5	174	7'-6	1,305'-0	2'-6 / 5'-0
B5	BARREL	4	108	9'-10	1,061'-8	
B6	BARREL	4	90	11'-2	1,005'-4	
B7	BARREL	7	108	11'-2	1,206'-4	
H1	HEADWALL	4	12	11'-4	136'-0	
H2	HEADWALL	4	24	3'-8	88'-1	1'-6 / 1'-6 / 0'-6
H3	HEADWALL	4	24	3'-0	72'-0	1'-6 / 1'-6
D1	DOWELS	5	80	2'-3	180'-0	
A1	APRONS	5	22	34'-7	761'-5	22'-11 / 11'-9 / CUT LINE / 11'-9 / 22'-11 / 11 BAR(S) PER SET 2 SET(S) REQ'D
A2	APRON	5	22	11'-9	258'-6	2'-1 / 9'-6
A3	APRON	5	22	10'-6	230'-11	1'-4 / 9'-2
A4	APRON	5	10	16'-1	160'-11	1'-1 / 9'-5 / 2'-6 / CUT LINE / 2'-6 / 9'-5 / 5 BAR(S) PER SET 2 SET(S) REQ'D
A5	APRON	5	10	13'-7	135'-11	1'-1 / 8'-11 / 2'-0 / CUT LINE / 2'-0 / 8'-11 / 5 BAR(S) PER SET 2 SET(S) REQ'D
W1	WINGWALL	5	48	14'-0	672'-0	9'-0 / 5'-0 / CUT LINE / 5'-0 / 9'-0 / 12 BAR(S) PER SET 4 SET(S) REQ'D
W2	WINGWALL	5	20	12'-8	254'-0	1'-11 / 1'-0 / 10'-9 / 1'-0
W3	WINGWALL	5	20	13'-5	268'-5	2'-2 / 1'-1 / 11'-3 / 1'-1
W4	WINGWALL	5	32	7'-1	226'-7	
W5	WINGWALL	5	48	4'-6	216'-0	3'-0 / 1'-6
W6	WINGWALL	5	32	5'-7	178'-7	9'-2 / CUT LINE / 2'-0 / 4 BAR(S) PER SET 8 SET(S) REQ'D
W7	WINGWALL	5	8	11'-10	94'-8	
C1	CUTOFF WALL	4	12	26'-3	314'-6	
T1	TIE	5	24	5'-0	120'-0	
T2	TIE	5	36	5'-0	180'-0	2'-5 / 1'-3 / 2'-6 / 2'-2

MARK	LOCATION	SIZE NO.	NO. BARS	LENGTH	TOTAL LENGTH	SKETCH

SUMMARY OF COATED BARS

6,447'-5 OF NUMBER 4 BARS AT	0.668 LBS/FT =	4,306.9 LBS
6,794'-11 OF NUMBER 5 BARS AT	1.043 LBS/FT =	7,087.1 LBS
1,206'-4 OF NUMBER 7 BARS AT	2.044 LBS/FT =	2,465.8 LBS
	TOTAL	13,859.7 LBS

NOTES:

ALL BARS ARE COATED

BAR SIZES ARE U.S. UNITS.

REINFORCING STEEL DIMENSIONS ARE OUT TO OUT OF BAR UNLESS OTHERWISE SPECIFIED.

SPLICES MAY BE OMITTED AT FABRICATORS OPTION...HOWEVER, IN SUCH CASE, FABRICATOR ASSUMES RESPONSIBILITY FOR FIT.

REVISIONS

NO.	DATE	BY	REMARKS

UTAH DEPARTMENT OF TRANSPORTATION
SALT LAKE CITY, UTAH
STRUCTURES DIVISION

APPROVAL RECOMM. — SENIOR DESIGN ENGR. — DATE

APPROVED FOR USE BY DIRECTOR — DEPUTY DIRECTOR ENGR. — DATE

DESIGN RH 02-03 CHECK HCB 7-03
DRAWN FJB 02-03 CHECK HCB 7-03
QUANT. FJB 02-03 CHECK RH 7-03

WASHINGTON INTERCHANGE AT RP 13

8'-0 x 10'-0 BOX CULVERT

PROJECT NUMBER * SP-15-1(20)13

WASHINGTON COUNTY

E1E-1330 DRG. NO.

SHT. 4 OF 4

25-NOV-2003 J:\DN_Projects\2828_02\Sheet_Files\Structures\BOXES\2828_E1E-1330_Sht4.dgn

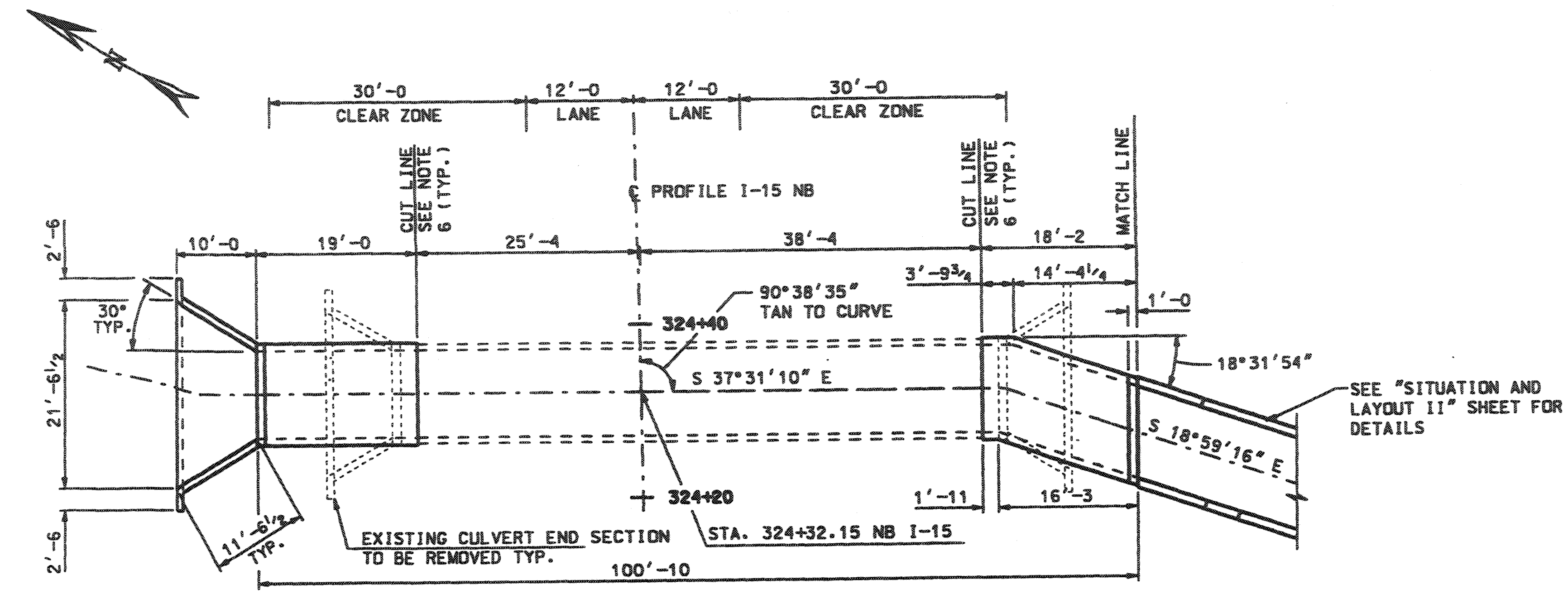

PLAN

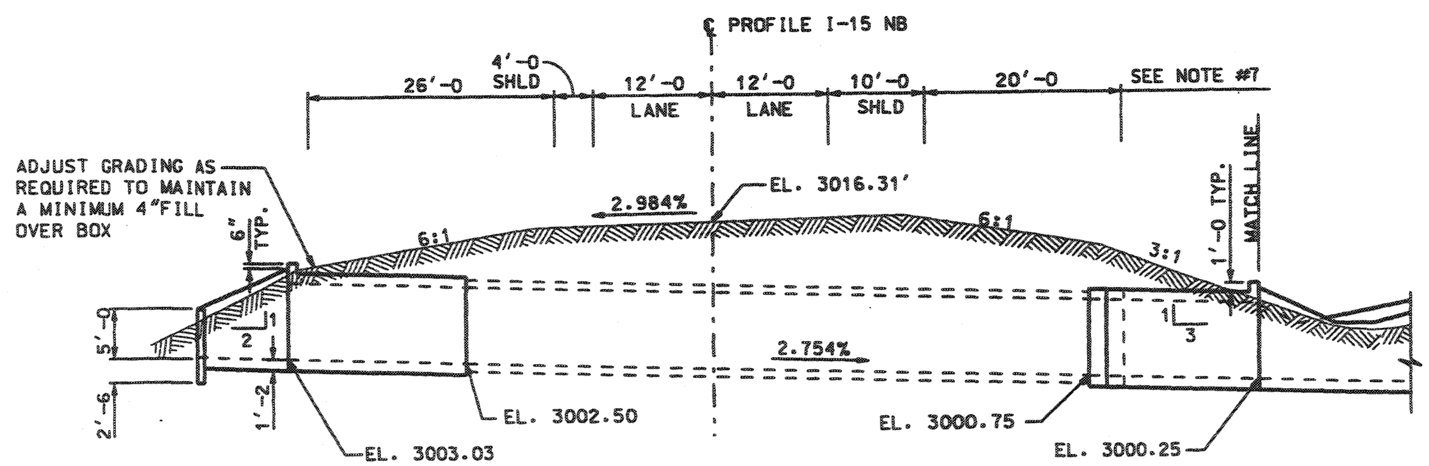

ELEVATION

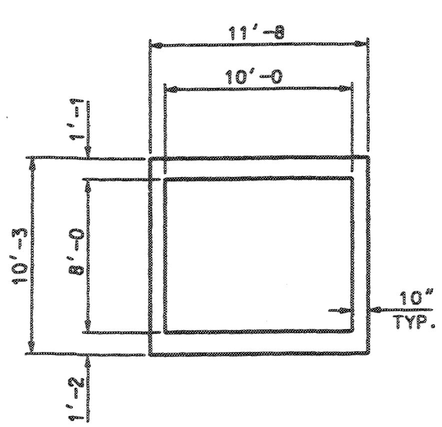

TYPICAL SECTION

HYDRAULIC DATA

1. DRAINAGE AREA .... 0.29 sq. mi.
2. INLET FLOWLINE ELEVATION ....3002.878 ft.
3. OUTLET FLOWLINE ELEVATION ....2994.98 ft.
4. DESIGN FREQUENCY ....50 yr.
5. DESIGN DISCHARGE (Q_d) ....251 cfs
6. INLET WATER SURFACE ELEVATION FOR Qd ....33006.8 ft.
7. OUTLET WATER SURFACE ELEVATION FOR Qd .....2996.27 ft.
8. OUTLET VELOCITY FOR Qd ....19.45 ft/s
9. 100 YR. DISCHARGE (Q_{100}) ....315 cfs
10. INLET WATER SURFACE ELEVATION FOR (Q_{100})...3007.40 ft.
11. OUTLET WATER SURFACE ELEVATION FOR (Q_{100})..2996.48 ft.
12. OVERTOPPING DISCHARGE (Q_{over}) ....* cfs
13. FREQUENCY OF (Q_{over}) (500 YR. MAX.) ....500* yr.
14. OVERTOPPING ELEVATION ....* ft.

INDEX OF SHEETS

1 - SITUATION AND LAYOUT I
2 - SITUATION AND LAYOUT II
3 - BARREL DETAILS PART A
4 - BARREL DETAILS PART B
5 - BARREL DETAILS PART C
6 - BARREL DETAILS PART D
7 - INLET DETAILS
8 - OUTLET DETAILS
9 - REINFORCING STEEL SCHEDULE I
10 - REINFORCING STEEL SCHEDULE II

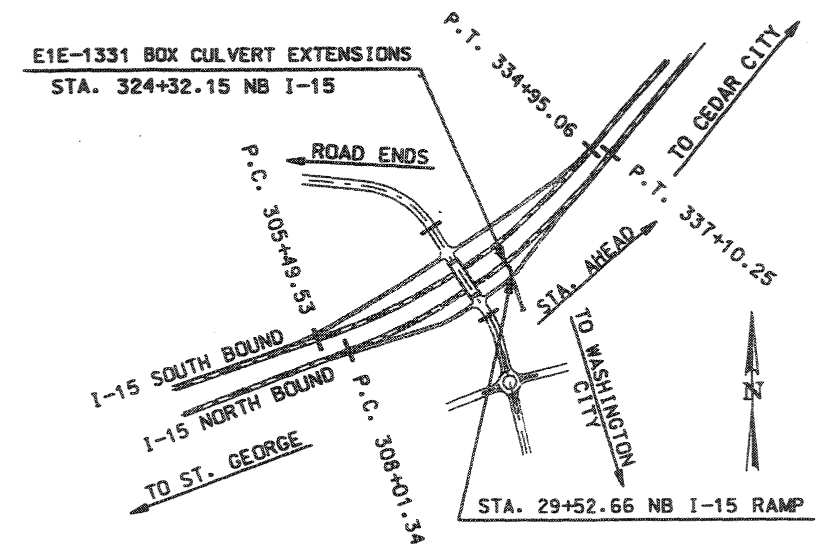

LOCATION PLAN

DESIGN DATA

HS-20 IN ACCORDANCE WITH CURRENT AASHTO LFD BRIDGE DESIGN SPECIFICATIONS AND INTERIM SPECIFICATIONS.

CAST-IN-PLACE CONCRETE: $f'c$ = 3650 PSI: fy (REINF.) = 60,000 PSI.

CLASS AA (AE) n = 8

DESIGN COVER: 0 TO 16'-0

GENERAL NOTES

1. USE COATED DEFORMED BILLET STEEL REINFORCING STEEL BARS CONFORMING TO AASHTO M 284, OR M 111, AND M 31 GRADE 60, RESPECTIVELY.
2. CHAMFER EXPOSED CONCRETE CORNERS ¾" EXCEPT WHERE NOTED OTHERWISE.
3. PROVIDE 2" COVER TO REINFORCING STEEL EXCEPT WHERE NOTED OTHERWISE.
4. USE CLASS AA (AE) CONCRETE EXCEPT WHERE SPECIFIED OTHERWISE.
5. USE TYPE II CEMENT (LOW ALKALI).
6. REMOVE EXISTING CULVERT END SECTION TO APPROXIMATELY 2'-0 FROM THE END OF THE EXISTING CULVERT.
7. DIMENSIONS AND SLOPES ARE PERPENDICULAR TO CENTERLINE I-15 NB.

QUANTITIES

ITEM	ESTIM.	UNIT	AS CONST.
STRUCTURAL CONCRETE (EST.QTY. 401 yds^3)	1	LUMP	
REINFORCING STEEL - COATED	68,722	LBS	
REMOVE CULVERT END SECTION	2	EACH	

NO.	DATE	BY	REMARKS

REVISIONS

UTAH DEPARTMENT OF TRANSPORTATION
SALT LAKE CITY, UTAH
STRUCTURES DIVISION

DESIGN RH 02-03 CHECK HCB 02-03
DRAWN LM 02-03 CHECK HCB 02-03
QUANT. HCB 02-03 CHECK RH 02-03
APPROVAL RECOM. DATE SENIOR DESIGN ENGR.
APPROVED FOR USE BY UDOT DATE UDOT BRIDGE ENGR.

WASHINGTON INTERCHANGE AT RP 13
10'-0 x 8'-0 BOX CULVERT
SITUATION AND LAYOUT I
PROJECT NUMBER * SP-15-1(20)13

WASHINGTON COUNTY
E1E-1331
DRG. NO.
SHT. 1 OF 10

V-2003

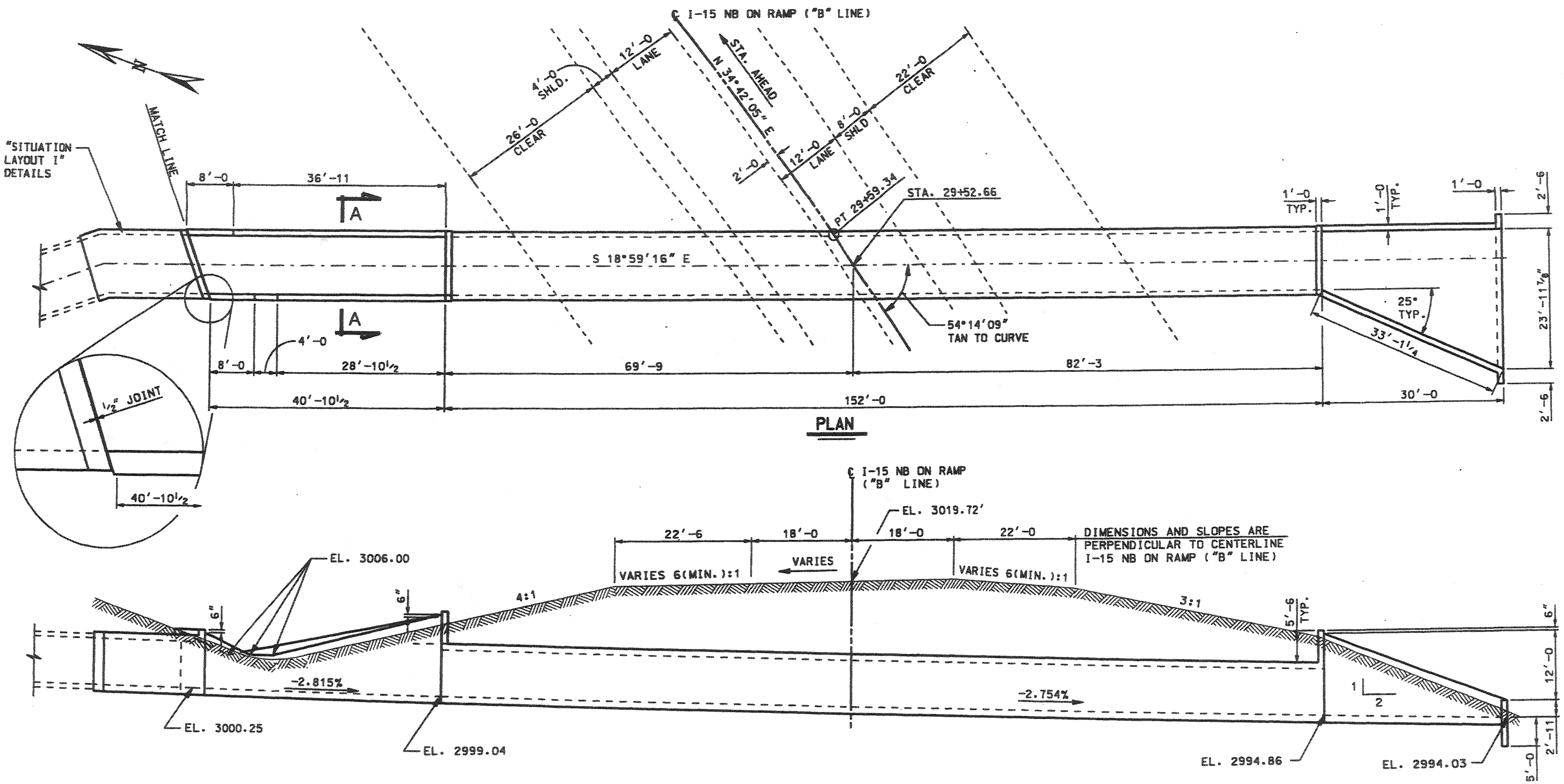

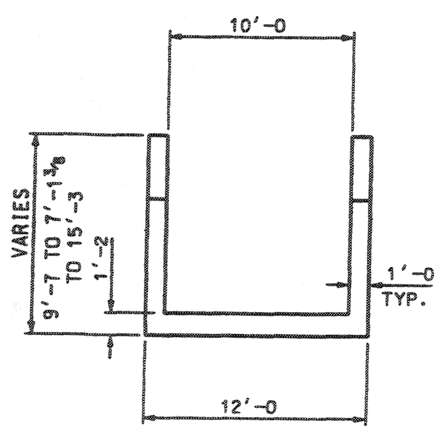

SECTION A-A

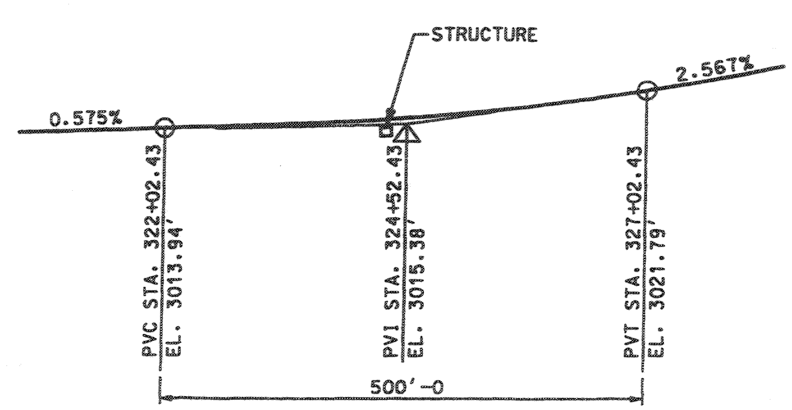

I-15 N.B. PROFILE

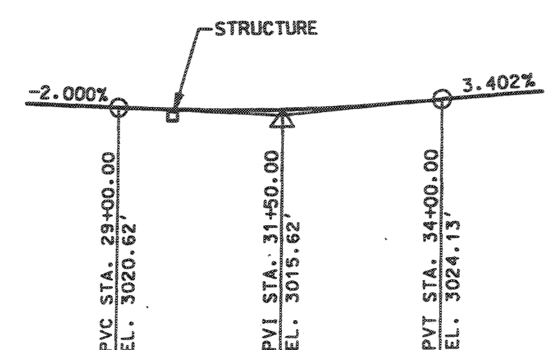

N.B. RAMP PROFILE ("B" LINE)

NB RAMP ("B" LINE) SUPERELEVATION	
STATION	SUPERELEVATION
29+00.00	6.0%
29+00.00 TO 31+00.00	6.0% TO -2.0%
31+00.00	-2.0%

CURVE DATA

I-15 NB ON RAMP ("B" LINE)

P.C. STA. 26+91.74
N = 200295.46
E = 101072.10
Δ = 21°54'13" L
R = 700.00'
D = 8°11'06"
T = 135.45'
L = 267.60'
P.I. STA. 28+27.19
N = 200370.02
E = 101185.19

I-15 N.B.

P.C. STA. 308+01.34
N = 199817.57
E = 99784.02
Δ = 29°05'20" L
R = 5729.65'
D = 1°00'00"
T = 1486.53'
L = 2908.92'
P.I. STA. 322+67.86
N = 200370.94
E = 101163.71

NO.	DATE	BY	REMARKS

REVISIONS

UTAH DEPARTMENT OF TRANSPORTATION
SALT LAKE CITY, UTAH
STRUCTURES DIVISION

DESIGN RH 02-03 CHECK HCB 02-03
DRAWN LM 02-03 CHECK HCB 02-03
QUANT. HCB 02-03 CHECK RH 02-03

APPROVAL RECOM. — DATE — SENIOR DESIGN ENGR.
APPROVED FOR USE BY UDOT — DATE — UDOT BRIDGE ENGR.

WASHINGTON INTERCHANGE AT RP 13
10'-0 x 8'-0 BOX CULVERT
SITUATION AND LAYOUT II
PROJECT NUMBER * SP-15-1(20)13

WASHINGTON COUNTY
E1E-1331
DRG. NO.
SHT. 2 OF 10

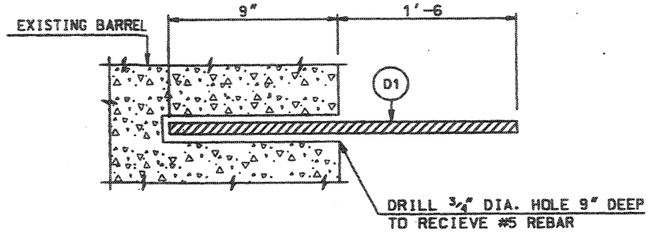

DOWEL EMBEDMENT DETAIL

NOTE:

1. EMBED DOWELS WITH APPROVED ADHESIVE. EPOXY ANCHORAGE MUST DEVELOP A MINIMUM PULLOUT STRENGTH OF 19 KIPS.

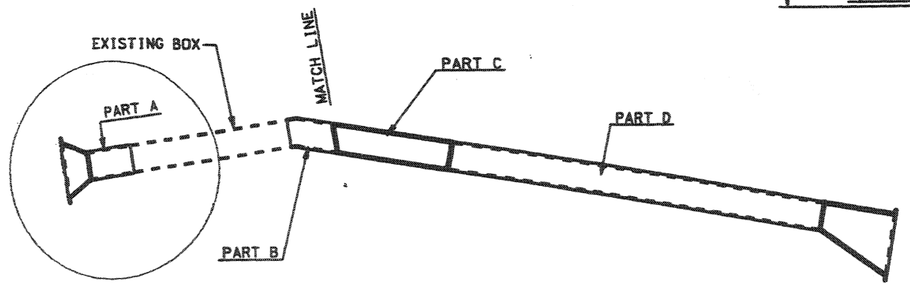

BARREL PLAN

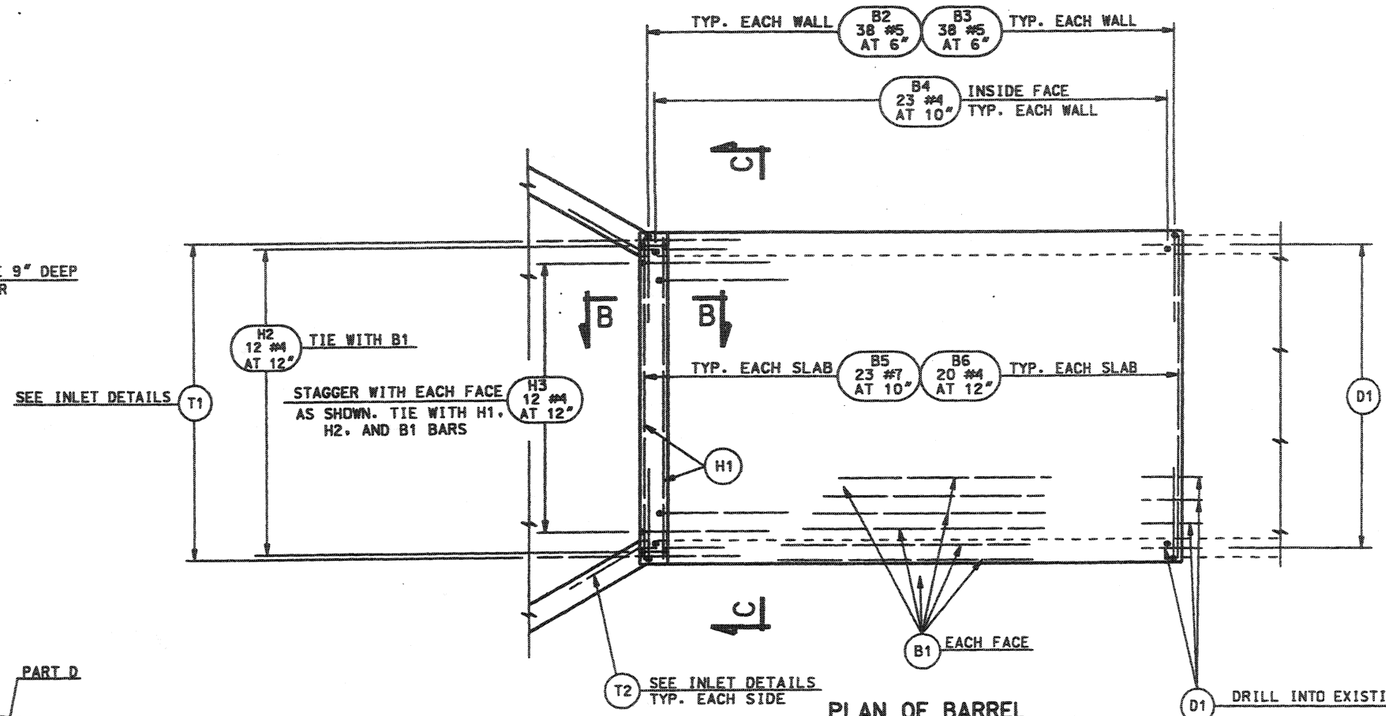

PLAN OF BARREL
PART A

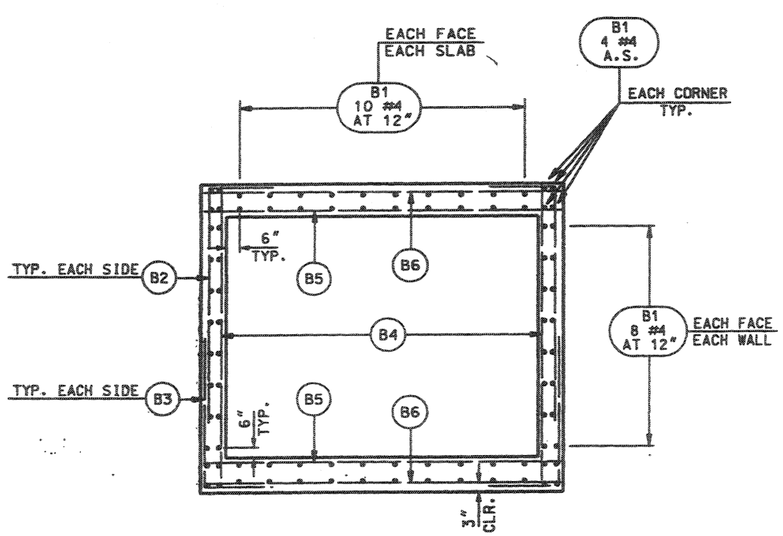

SECTION C-C

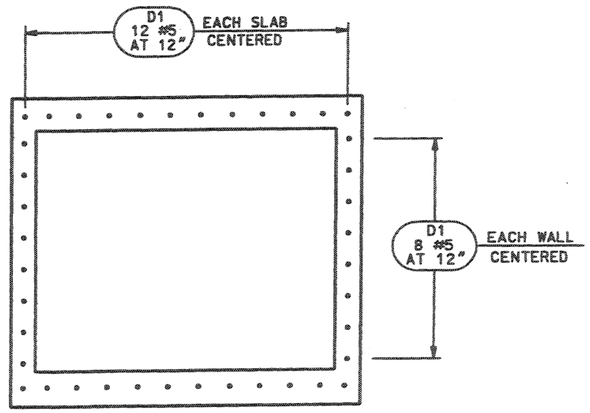

DOWEL DETAILS

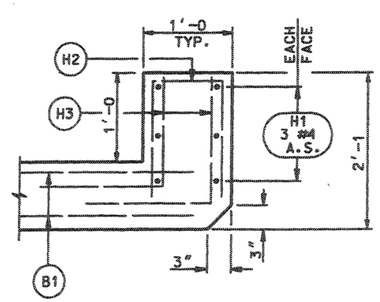

SECTION B-B

CONCRETE QUANTITIES	
LOCATION	TOTAL CU. YARDS
BARREL	27.85
HEADWALLS	0.4
TOTAL	28.25

REVISIONS			
NO.	DATE	BY	REMARKS

UTAH DEPARTMENT OF TRANSPORTATION
SALT LAKE CITY, UTAH
STRUCTURES DIVISION

DESIGN RH 02-03 CHECK HCB 02-03
DRAWN LM 02-03 CHECK HCB 02-03
QUANT. HCB 02-03 CHECK RH 02-03

APPROVAL RECOMM. DATE SENIOR DESIGN ENGR.
APPROVED FOR USE BY UDOT DATE UDOT BRIDGE ENGR.

WASHINGTON INTERCHANGE AT RP 13
10'-0 x 8'-0 BOX CULVERT
BARREL DETAILS PART A

PROJECT NUMBER * SP-15-1(20)13

WASHINGTON
COUNTY

E1E-1331
DRG. NO.

SHT. 3 OF 10

DGN File:N:\Projects\2003 KSheets_Flex\Structures\ADOBE\2003_E1E-1331_sht3.dgn

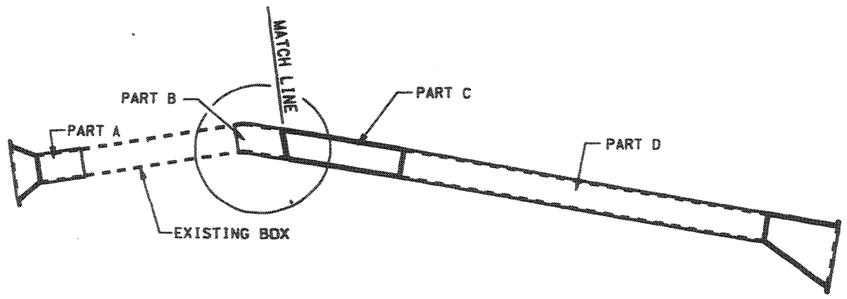

BARREL PLAN

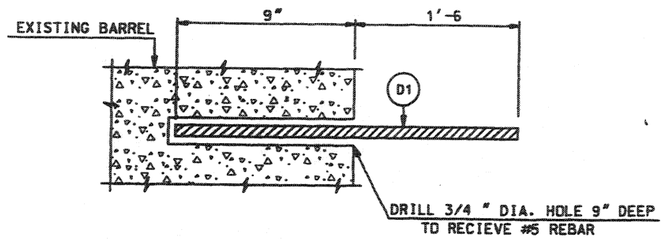

DOWEL EMBEDMENT DETAIL

NOTE:

1. EMBED DOWELS WITH APPROVED ADHESIVE. EPOXY ANCHORAGE MUST DEVELOP A MINIMUM PULLOUT STRENGTH OF 19 KIPS.

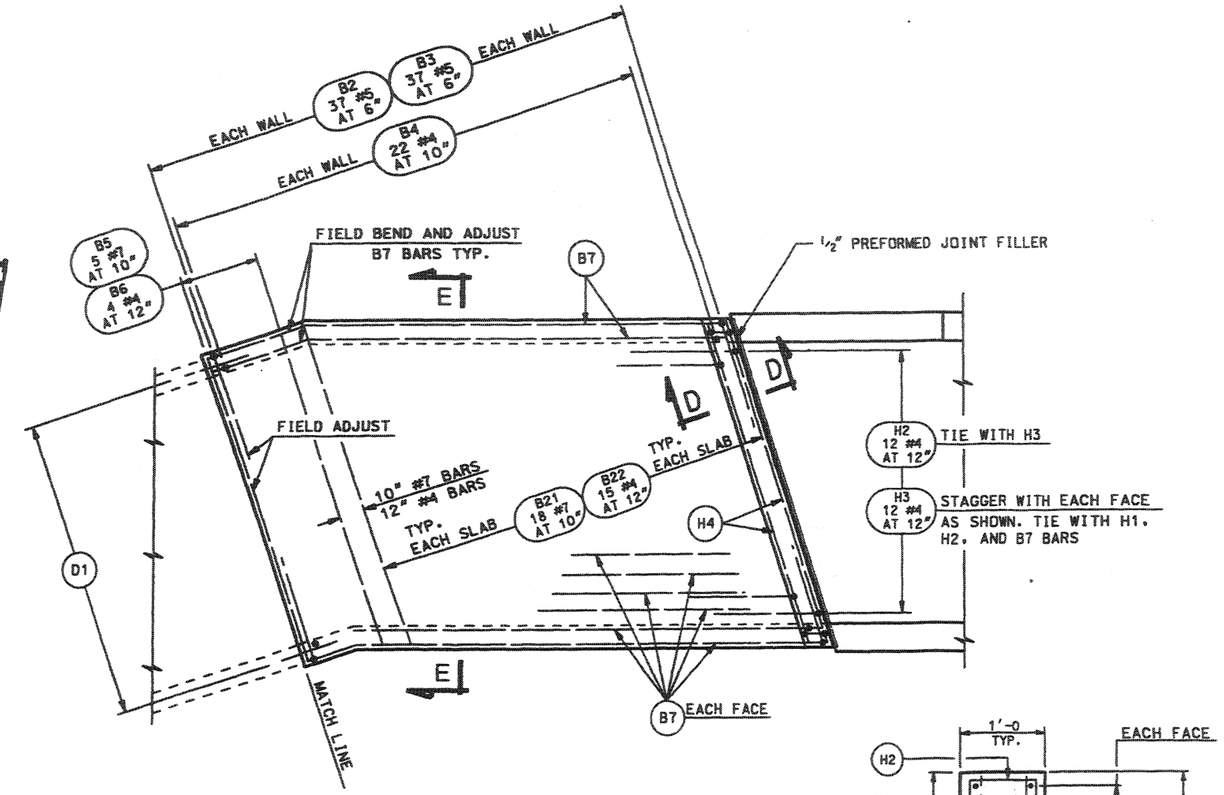

PLAN OF BARREL
PART B

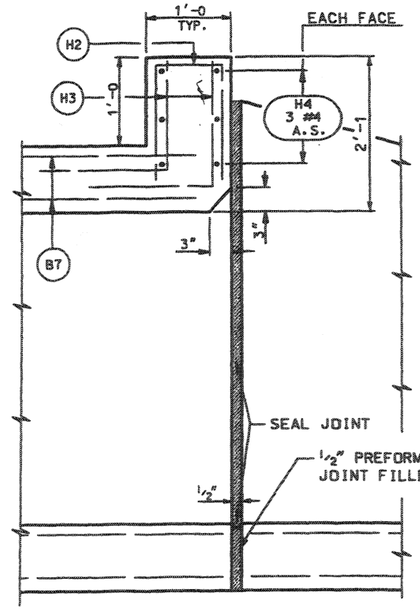

SECTION D-D

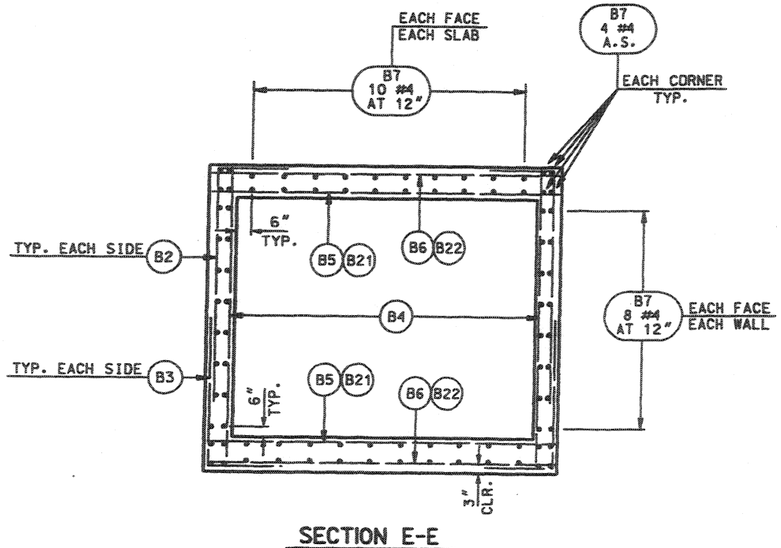

SECTION E-E

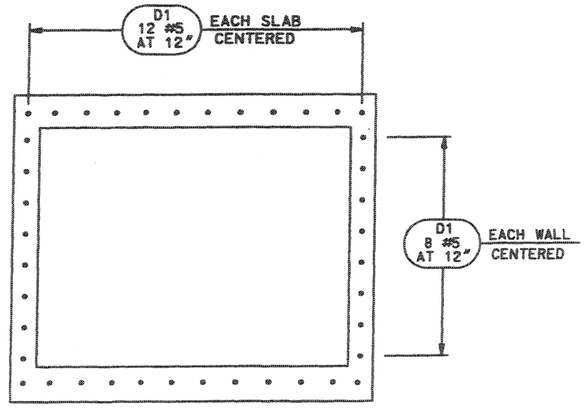

DOWEL DETAILS

CONCRETE QUANTITIES	
LOCATION	TOTAL CU. YARDS
BARREL	27.86
HEADWALLS	0.4
TOTAL	28.26

REVISIONS			
NO.	DATE	BY	REMARKS

UTAH DEPARTMENT OF TRANSPORTATION
SALT LAKE CITY, UTAH
STRUCTURES DIVISION

DESIGN RH 02-03 CHECK HCB 02-03
DRAWN LM 02-03 CHECK HCB 02-03
QUANT. HCB 02-03 CHECK RH 02-03

APPROVAL RECOMM. — DATE — SENIOR SYSTEM ENGR.
APPROVED FOR USE BY UDOT — DATE — UDOT MATERIAL ENGR.

WASHINGTON INTERCHANGE AT RP 13
10'-0 x 8'-0 BOX CULVERT
BARREL DETAILS PART B

PROJECT NUMBER * SP-15-1(20)13

WASHINGTON COUNTY

E1E-1331 DRG. NO.

SHT. 4 OF 10

DGN File: N:\Projects\2828.03\Sheet Files\Structures\B02E5\2828_E1E-1331_SHT4.dgn
25-NOV-2003

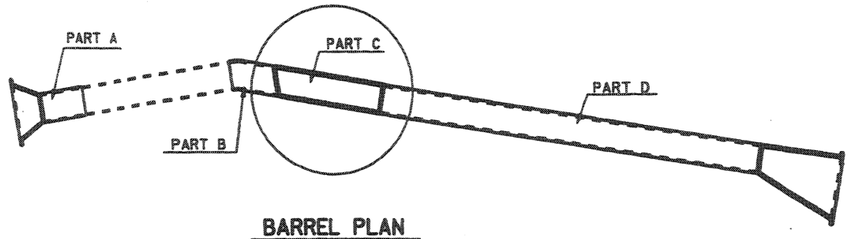

BARREL PLAN

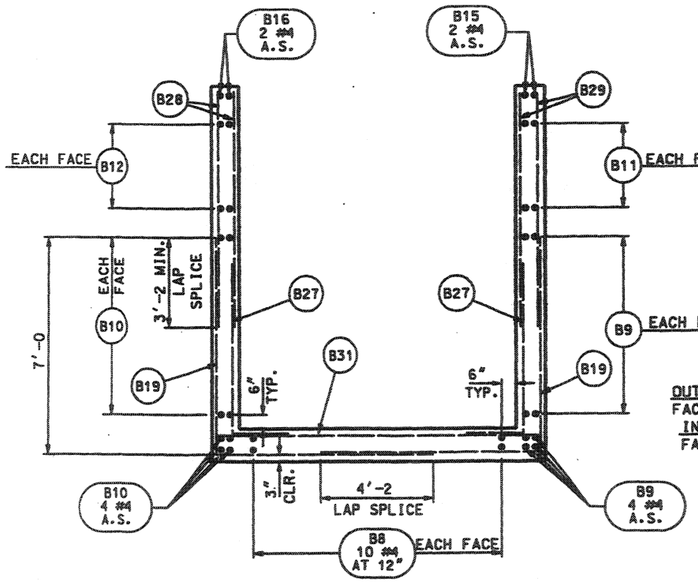

SECTION H-H

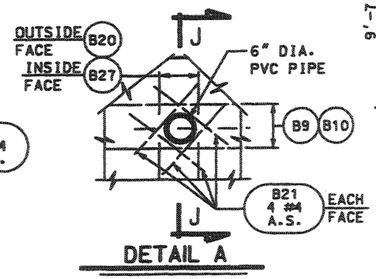

DETAIL A

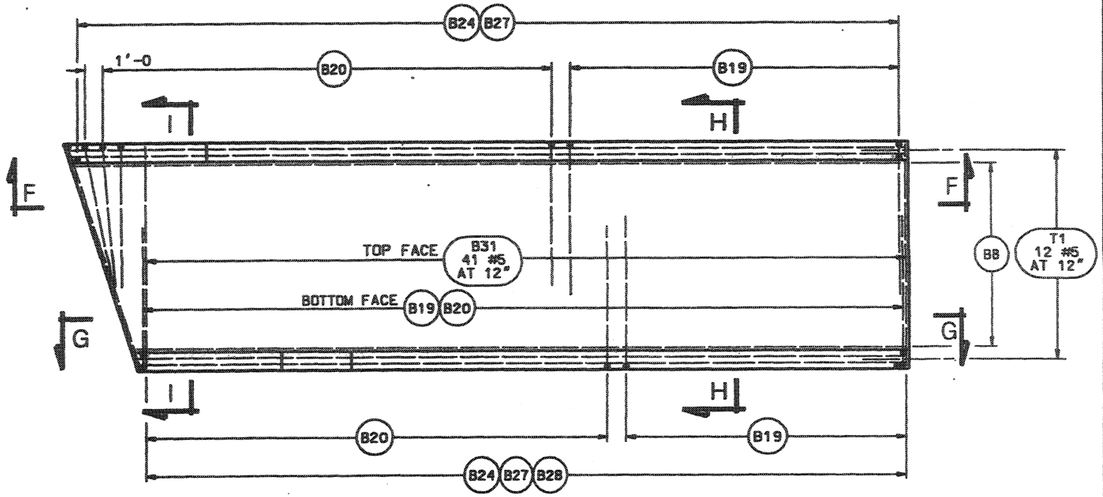

PLAN

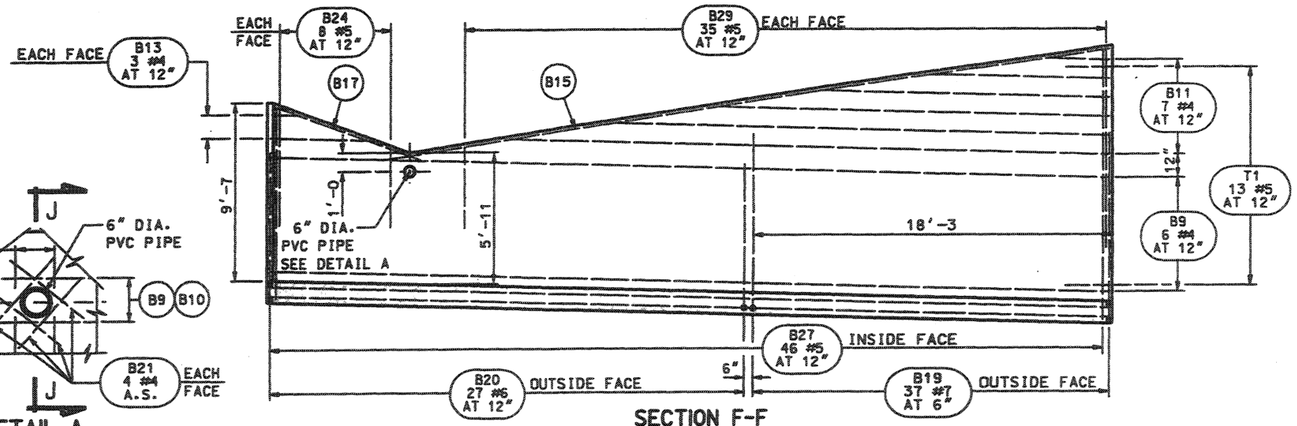

SECTION F-F

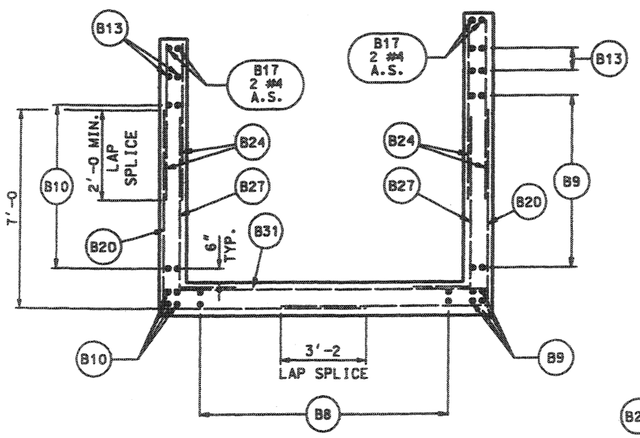

SECTION I-I

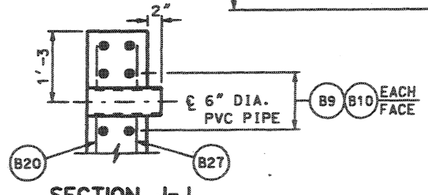

SECTION J-J

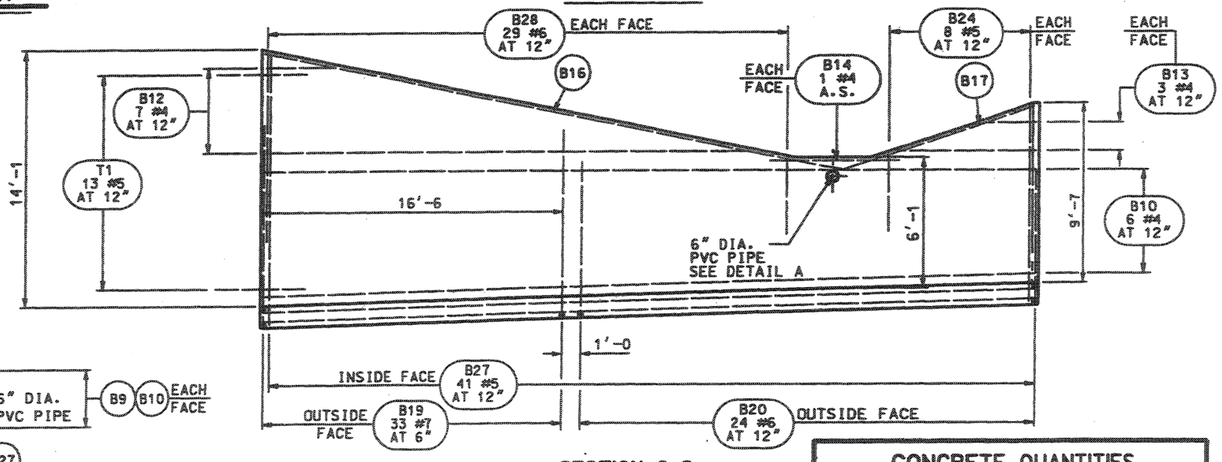

SECTION G-G

CONCRETE QUANTITIES	
LOCATION	TOTAL CU. YARDS
U-SHAPE BARREL	52.3
TOTAL	52.3

NO.	DATE	BY	REVISIONS REMARKS

UTAH DEPARTMENT OF TRANSPORTATION
SALT LAKE CITY, UTAH
STRUCTURES DIVISION

DESIGN RH 02-03 CHECK HCB 02-03
DRAWN LM 02-03 CHECK HCB 02-03
QUANT. HCB 02-03 CHECK RH 02-03

APPROVAL RECOMMENDED — SENIOR BRIDGE ENGR. — DATE
APPROVED BY UDOT — UDOT BRIDGE ENGR. — DATE

WASHINGTON INTERCHANGE AT RP 13
10'-0 x 8'-0 BOX CULVERT
BARREL DETAILS PART C

PROJECT NUMBER * SP-15-1(20)13

WASHINGTON COUNTY
E1E-1331 DRG. NO.
SHT. 5 OF 10

DGN: File:N:\Projects\2828.#3\Sheets Files\Structures\BOXES\2828_E1E-1331_PART5.dgn
-NOV-2003

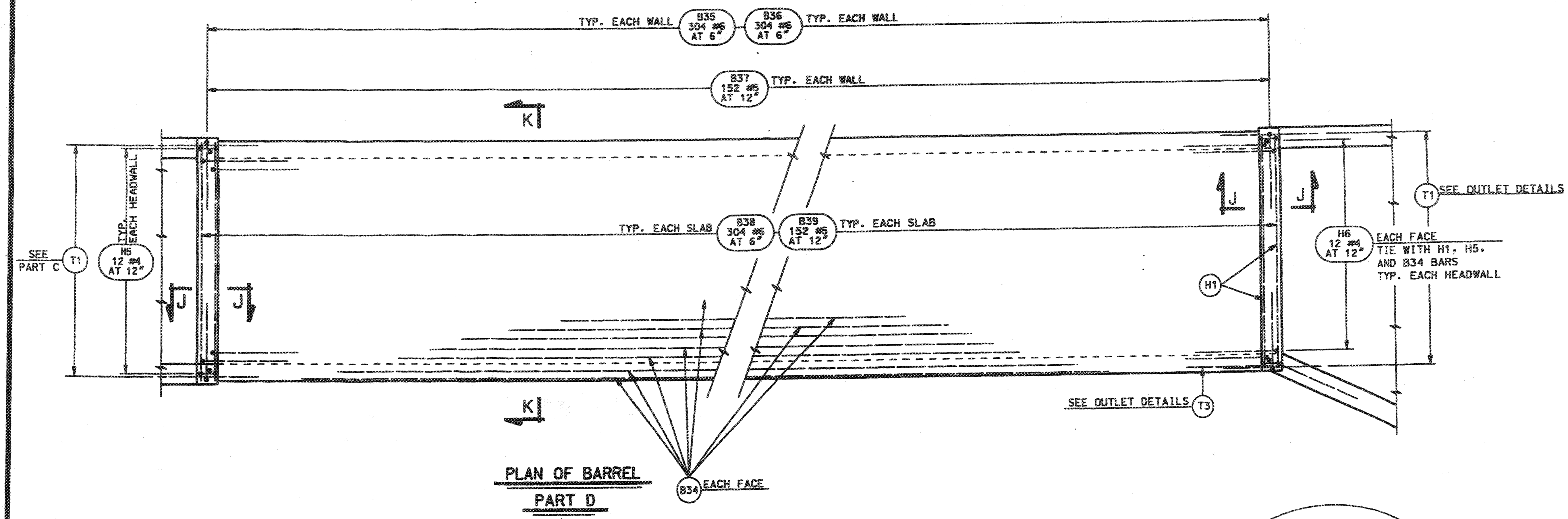

PLAN OF BARREL
PART D

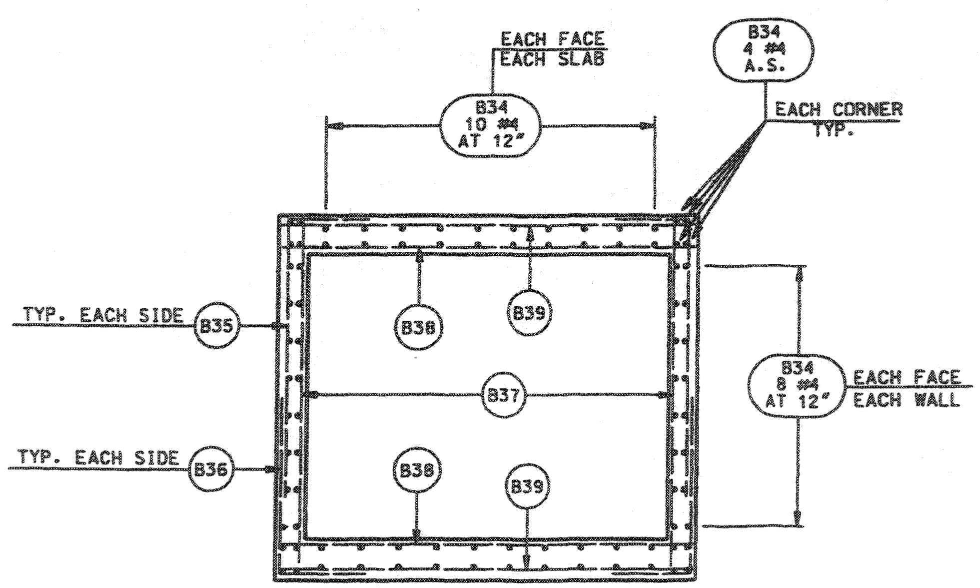

SECTION K-K

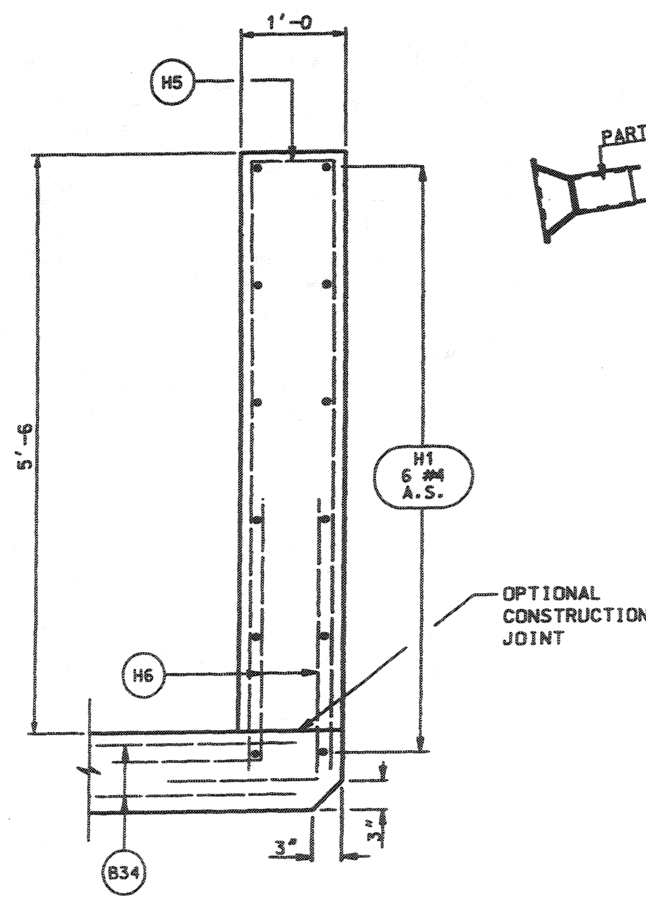

SECTION J-J

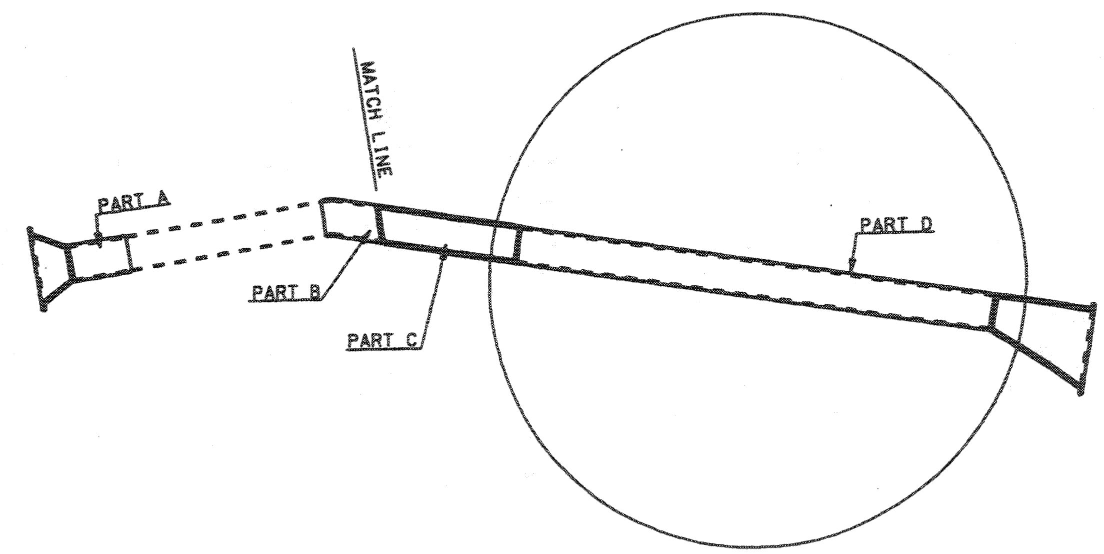

BARREL PLAN

CONCRETE QUANTITIES	
LOCATION	TOTAL CU. YARDS
BARREL	223.0
HEADWALLS	4.9
TOTAL	227.9

REVISIONS

NO.	DATE	BY	REMARKS

UTAH DEPARTMENT OF TRANSPORTATION
SALT LAKE CITY, UTAH
STRUCTURES DIVISION

DESIGN RH 02-03 CHECK HCB 02-03
DRAWN LM 02-03 CHECK HCB 02-03
QUANT. HCB 02-03 CHECK RH 02-03

APPROVAL RECOMM. DATE SENIOR DESIGN ENGR.
APPROVED FOR USE BY UDOT DATE UDOT BRIDGE ENGR.

WASHINGTON INTERCHANGE AT RP 13
10'-0 x 8'-0 BOX CULVERT
BARREL DETAILS PART D

PROJECT NUMBER * SP-15-1(20)13

WASHINGTON COUNTY

E1E-1331
DRG. NO.

SHT. 6 OF 10

DGN File: N:\Projects\2520_83\Sheet_Files\Structures\BOXES\2520_E1E-1331_SH16.dgn
25-NOV-2003

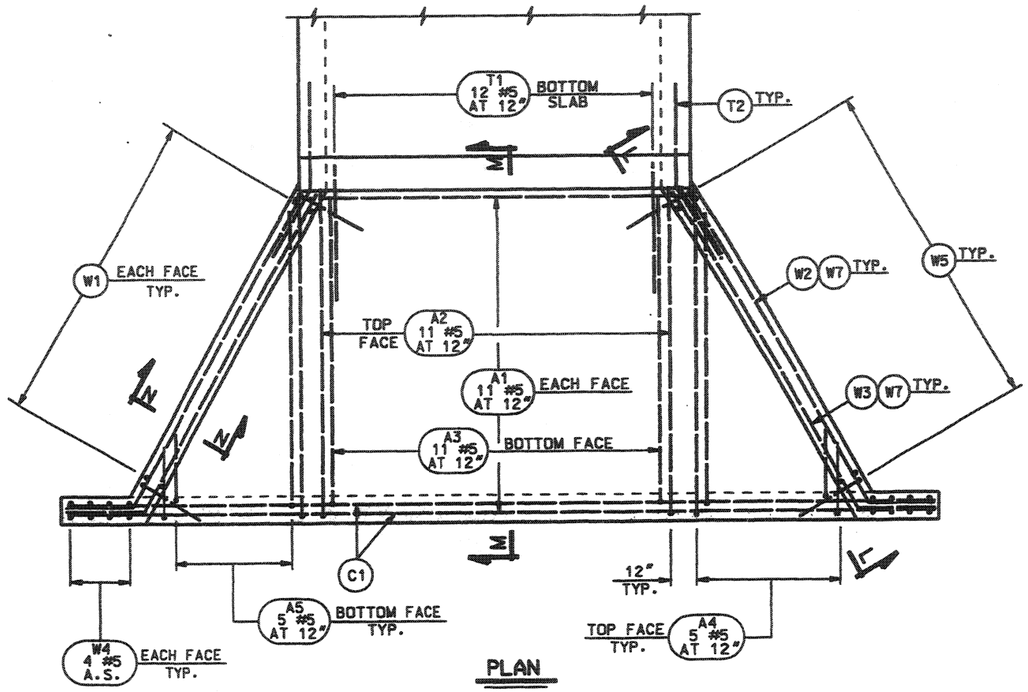

PLAN

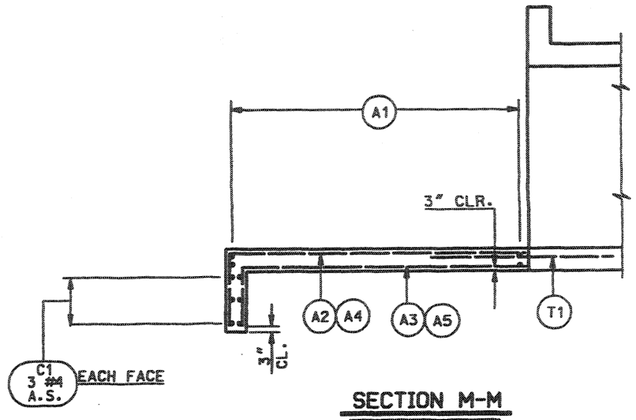

SECTION M-M

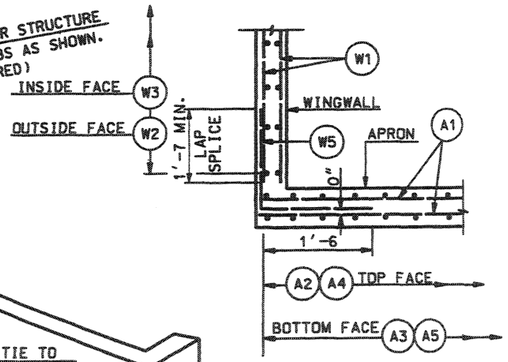

SECTION N-N

FORM 6" BLOCK LETTERS FOR STRUCTURE NUMBER IN CENTER OF CURBS AS SHOWN. (BOTH ENDS REQUIRED)

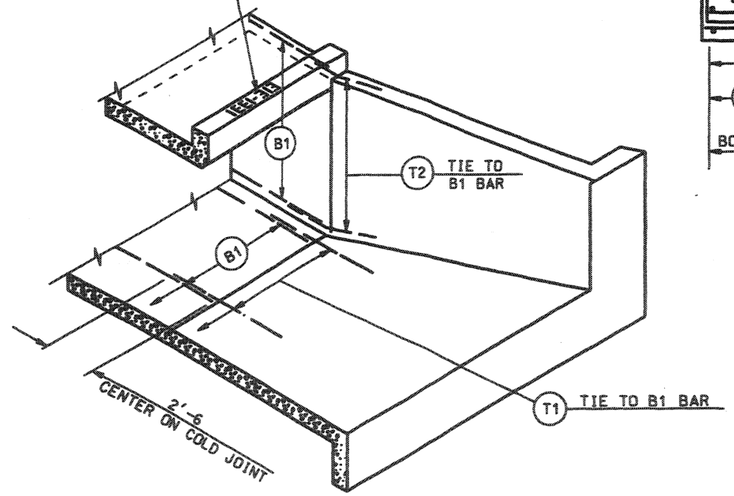

CUT SECTION PICTORIAL VIEW

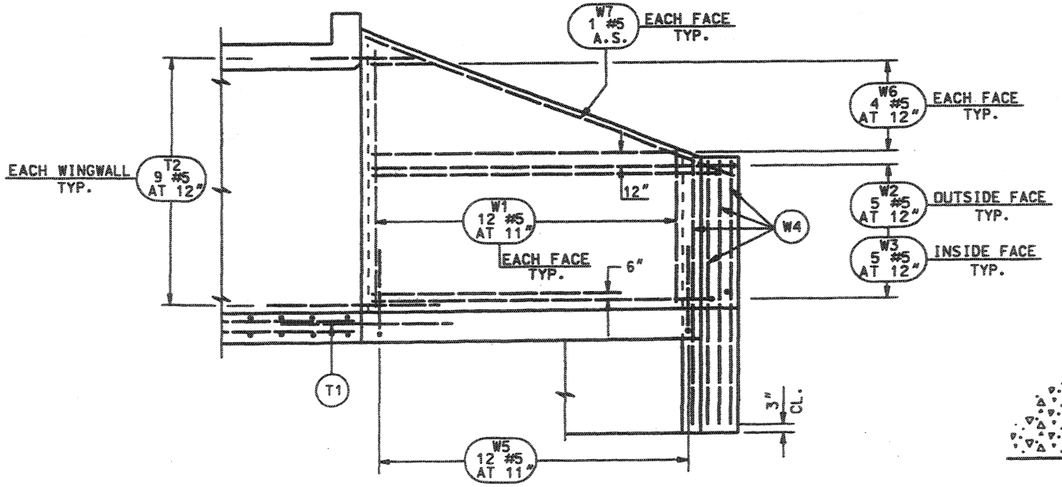

SECTION L-L

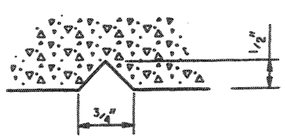

TYPICAL SECTION

THRU DRAWING NUMBER

CONCRETE QUANTITIES	
LOCATION	TOTAL CU. YARDS
APRONS	7.5
CUT-OFF-WALLS	1.1
WINGWALLS	5.2
EXTENSION WALLS	1.0
TOTAL	14.8

REVISIONS

NO.	DATE	BY	REMARKS

UTAH DEPARTMENT OF TRANSPORTATION
SALT LAKE CITY, UTAH
STRUCTURES DIVISION

DESIGN RH 02-03 CHECK HCB 02-03
DRAWN LM 02-03 CHECK HCB 02-03
QUANT. HCB 02-03 CHECK RH 02-03

APPROVED FOR DESIGN BY: DATE: ENGR. DESIGN ENGR.
APPROVED FOR USE BY: DATE: ENGR. ENGR.

WASHINGTON INTERCHANGE AT RP 13
10'-0 x 8'-0 BOX CULVERT
INLET DETAILS

PROJECT NUMBER * SP-15-1(20)13

WASHINGTON COUNTY

E1E-1331 DRG. NO.

SHT. 7 OF 10

DGN: File:N:\Projects\2928.03\Sheets_Files\Structures\MOYER\2928_A1E1331_SHT7.dgn
-NOV-2003

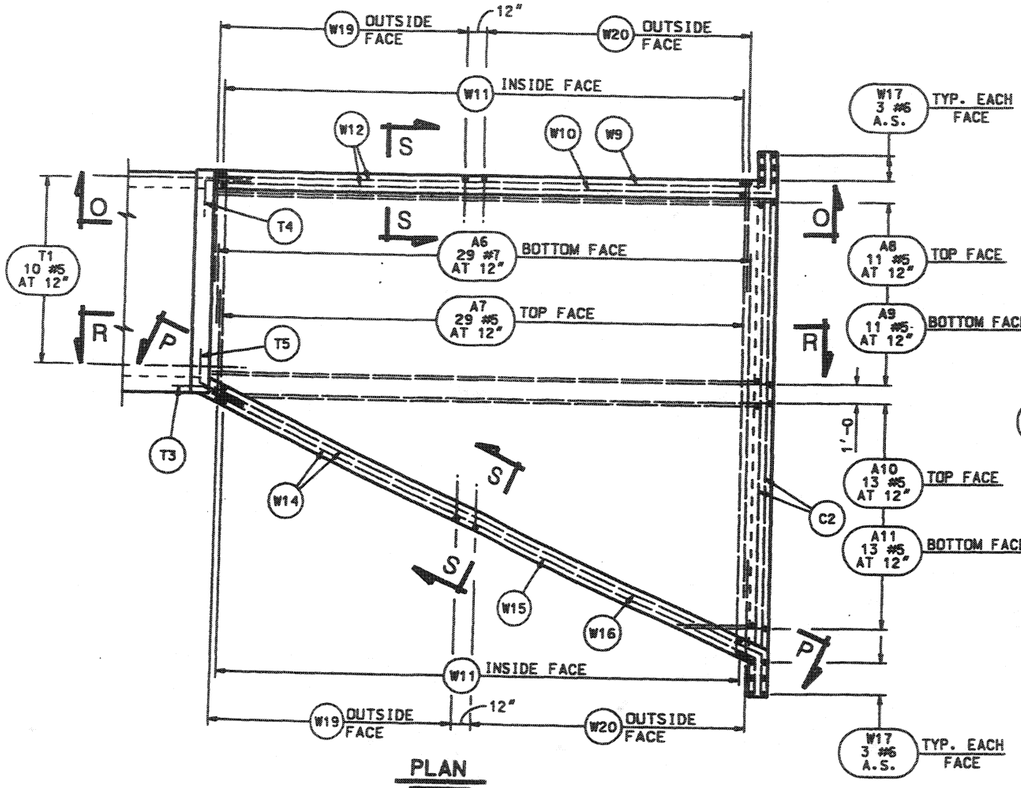

PLAN

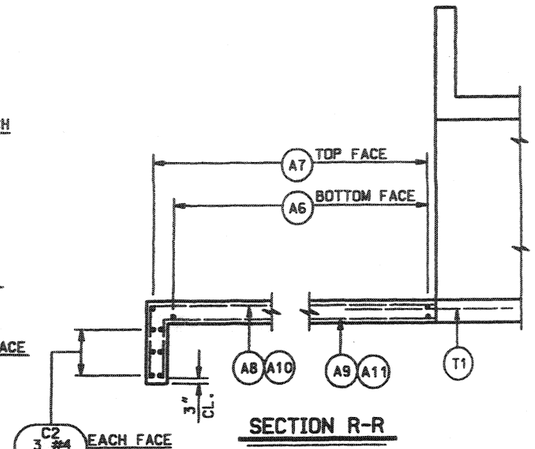

SECTION R-R

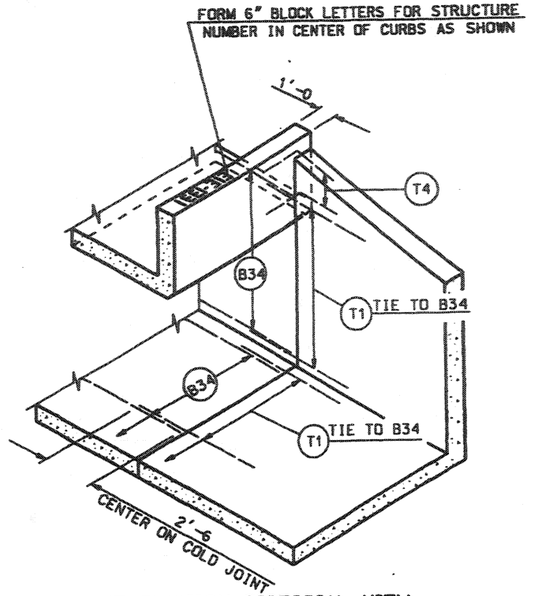

CUT SECTION PICTORIAL VIEW

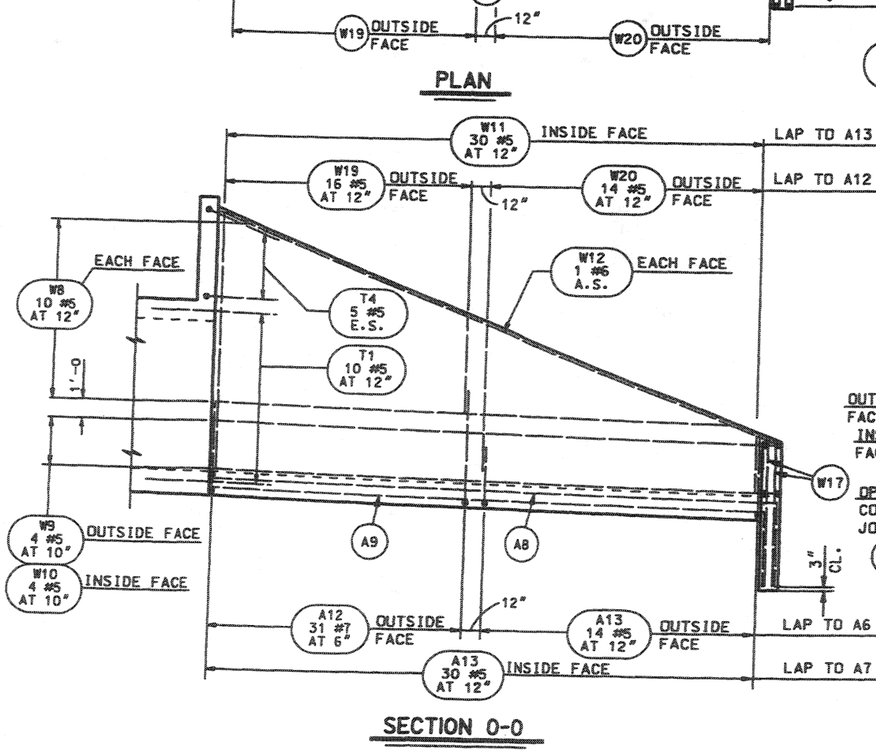

SECTION O-O

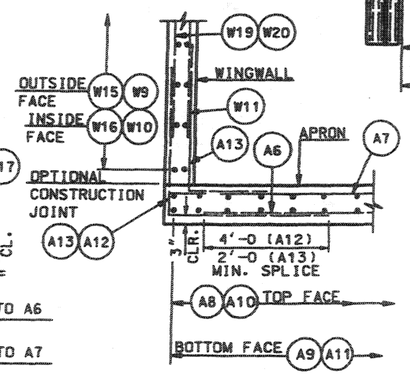

SECTION S-S

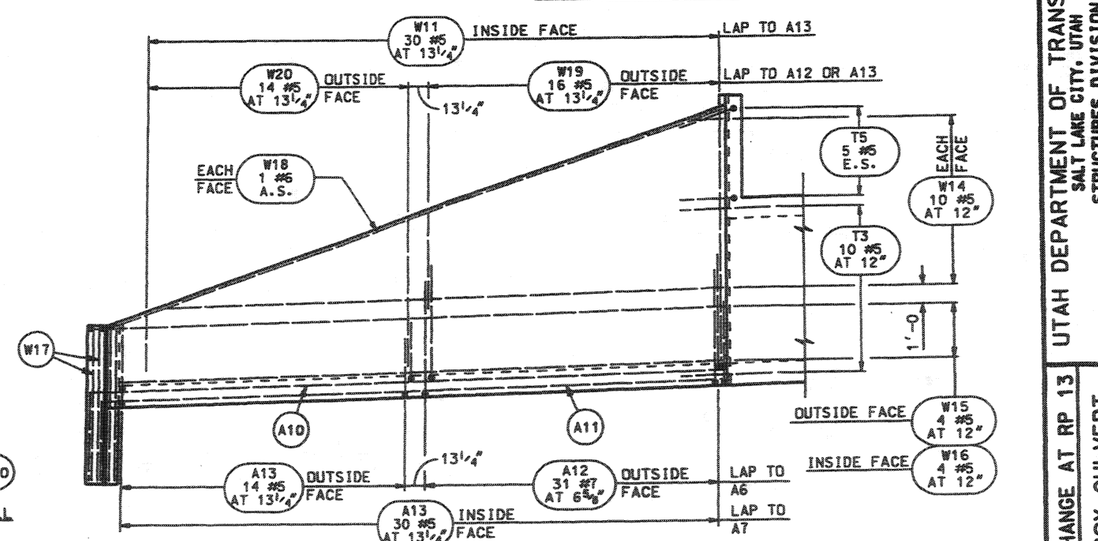

SECTION P-P

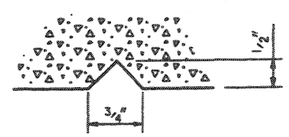

TYPICAL SECTION

THRU DRAWING NUMBER

CONCRETE QUANTITIES	
LOCATION	TOTAL CU. YARDS
APRON	22.0
CUT-OFF-WALL	3.4
WINGWALLS	22.0
EXTENSION WALL	1.5
TOTAL	48.9

REVISIONS			
NO.	DATE	BY	REMARKS

UTAH DEPARTMENT OF TRANSPORTATION
SALT LAKE CITY, UTAH
STRUCTURES DIVISION

DESIGN RH 02-03 CHECK HCB 02-03
DRAWN LM 02-03 CHECK HCB 02-03
QUANT. HCB 02-03 CHECK RH 02-03

APPROVAL RECOMMENDED: _____ DATE _____ SYSTEM DESIGN ENGR.

APPROVED FOR USE BY: _____ DATE _____ STATE ROUTE ENGR.

WASHINGTON INTERCHANGE AT RP 13
10'-0 x 8'-0 BOX CULVERT
OUTLET DETAILS

PROJECT NUMBER * SP-15-1(20)13

WASHINGTON COUNTY

E1E-1331 DRG. NO.

SHT. 8 OF 10

DGN: F:\pw\Projects\2828\Sheet Files\Structures\ABOVES\2828_E1E-1331_ant.dgn
25-NOV-2003

MARK	LOCATION	SIZE NO.	NO. BARS	LENGTH	TOTAL LENGTH	A	B	C	D	E	SKETCH NOTES
B1	BARREL	4	88	18'-8	1,642'-8						
B2	BARREL	5	150	8'-11	1,338'-0	6'-5	2'-6				
B3	BARREL	5	150	7'-6	1,125'-0	5'-0	2'-6				
B4	BARREL	4	90	9'-10	885'-0						
B5	BARREL	7	56	11'-4	634'-8						
B6	BARREL	4	48	11'-4	544'-0						
B7	BARREL	4	88	18'-7	1,635'-4						
B8	BARREL	4	20	42'-8	853'-4						44'-2; 41'-2; CUT LINE; 10 BAR(S) PER ½ SET, 2 ½ SET(S) REQ'D
B9	BARREL	4	16	44'-7	713'-4						
B10	BARREL	4	16	40'-8	650'-8						
B11	BARREL	4	7	39'-7	277'-1	33'-4	6'-3	7	1		
B12	BARREL	4	7	31'-9	222'-3	26'-9	5'-0	7	1		
B13	BARREL	4	6	7'-10	47'-0	6'-1	1'-9	3	2		CUT LINE; C = NO. BAR(S) PER SET, D = NO. SET(S) REQ'D
B14	BARREL	4	2	6'-0	12'-0						
B15	BARREL	4	2	37'-11	75'-10						
B16	BARREL	4	2	29'-10	59'-8						
B17	BARREL	4	4	8'-7	34'-4						
B18	NOT USED	4	0	0'-0	0'-0						
B19	BARREL	7	70	15'-10	1,108'-4						7'-11; 7'-11
B20	BARREL	6	51	14'-2	722'-6						6'-9; 7'-5
B21	BARREL	4	16	2'-0	32'-0						
B22	NOT USED	5	0	0'-0	0'-0						
B23	NOT USED	5	0	0'-0	0'-0						
B24	BARREL	5	32	4'-0	126'-8						5'-5; 2'-6; CUT LINE; 8 BAR(S) PER ½ SET, 4 ½ SET(S) REQ'D
B25	NOT USED	5	0	0'-0	0'-0						
B26	NOT USED	6	0	0'-0	0'-0						
B27	BARREL	5	87	8'-0	696'-0						2'-0; 6'-0
B28	BARREL	6	58	6'-3	364'-11	10'-0	2'-7	29	2		
B29	BARREL	6	70	6'-3	440'-5	10'-0	2'-7	35	2		CUT LINE; C = NO. BAR(S) PER ½ SET, D = NO. ½ SET(S) REQ'D
B30	NOT USED	6	0	0'-0	0'-0						
B31	BARREL	5	41	11'-8	478'-4						
B32	NOT USED	5	0	0'-0	0'-0						
B33	NOT USED	6	0	0'-0	0'-0						
B34	BARREL	4	88	156'-2	13,742'-8						1'-6; 151'-8; 3 SPLICE(S) REQ'D
B35	BARREL	6	608	10'-0	6,080'-0						3'-0; 7'-0
B36	BARREL	6	608	8'-0	4,864'-0						3'-0; 5'-0
B37	BARREL	5	304	9'-10	2,989'-4						
B38	BARREL	6	608	11'-2	6,789'-4						
B39	BARREL	5	304	11'-4	3,445'-4						
A1	APRON	5	11	34'-7	380'-9						22'-11; 11'-9; CUT LINE; 11'-9; 22'-11; 11 BAR(S) PER SET, 1 SET(S) REQ'D
A2	APRON	5	11	11'-9	129'-3	9'-8	2'-1				
A3	APRON	5	11	10'-6	115'-6	9'-2	1'-4				
A4	APRON	5	5	16'-1	80'-5	9'-5	2'-6	2'-1	5	1	
A5	APRON	5	5	13'-7	67'-11	8'-11	2'-0	1'-4	5	1	CUT LINE; D = NO. BAR(S) PER SET, E = NO. SET(S) REQ'D
A6	APRON	7	29	14'-6	421'-9						21'-1; 8'-0; CUT LINE; 29 BAR(S) PER ½ SET, 1 ½ SET(S) REQ'D
A7	APRON	5	31	18'-9	581'-3						25'-8; 11'-10; CUT LINE; 31 BAR(S) PER ½ SET, 1 ½ SET(S) REQ'D
A8	APRON	5	11	34'-3	376'-9	29'-8	4'-7				
A9	APRON	5	11	33'-0	363'-0	29'-0	4'-0				
A10	APRON	5	13	20'-11	271'-5	29'-1	3'-4	4'-8	13	1	
A11	APRON	5	13	19'-6	254'-0	28'-5	2'-8	4'-0	13	1	CUT LINE
A12	APRON	7	62	12'-0	744'-0						6'-0; 6'-0
A13	APRON	5	94	8'-0	752'-0						4'-0; 4'-0
W1	WINGWALL	5	24	14'-6	348'-0						9'-3; 5'-3; CUT LINE; 5'-3; 9'-3; 12 BAR(S) PER SET, 2 SET(S) REQ'D
W2	WINGWALL	5	10	12'-6	125'-5	10'-7	1'-11	1'-0	1'-8		
W3	WINGWALL	5	10	13'-5	134'-0	11'-2	2'-3	1'-1	1'-11		
W4	WINGWALL	5	16	7'-1	113'-4						
W5	WINGWALL	5	24	5'-2	124'-1						3'-8; 1'-6
W6	WINGWALL	5	16	5'-7	89'-4						9'-2; 2'-0; CUT LINE; 4 BAR(S) PER ½ SET, 4 ½ SET(S) REQ'D
W7	WINGWALL	5	4	11'-10	47'-4						
W8	WINGWALL	5	20	15'-1	302'-6						27'-0; 3'-3; CUT LINE; 10 BAR(S) PER ½ SET, 2 ½ SET(S) REQ'D
W9	WINGWALL	5	4	30'-6	122'-0						1'-6; 29'-0
W10	WINGWALL	5	4	31'-10	127'-4						2'-2; 29'-8
W11	WINGWALL	5	30	16'-2	485'-0						13'-2; 3'-0; CUT LINE; 3'-0; 13'-2; 30 BAR(S) PER SET, 1 SET(S) REQ'D
W12	WINGWALL	6	2	31'-10	63'-8						
W13	NOT USED	5	0	0'-0	0'-0						
W14	WINGWALL	5	10	33'-11	339'-2						30'-5; 3'-6; CUT LINE; 3'-6; 30'-5; 10 BAR(S) PER SET, 1 SET(S) REQ'D
W15	WINGWALL	5	4	33'-10	135'-4						1'-10; 1'-8; 32'-0; 0'-9

REVISIONS

NO.	DATE	BY	REMARKS

UTAH DEPARTMENT OF TRANSPORTATION
SALT LAKE CITY, UTAH
STRUCTURES DIVISION

APPROVAL RECOMM. ____ DATE ____ SENIOR DESIGN ENGR.
APPROVED FOR USE BY UDOT ____ DATE ____ UDOT BRIDGE ENGR.

DESIGN RH 02-03 CHECK HCB 02-03
DRAWN LM 02-03 CHECK HCB 02-03
QUANT. HCB 02-03 CHECK RH 02-03

WASHINGTON INTERCHANGE AT RP 13
10'-0 X 8'-0 BOX CULVERT
REINFORCING STEEL SCHEDULE I

PROJECT NUMBER * SP-15-1(20)13

WASHINGTON COUNTY

E1E-1331 DRG. NO.

SHT. 9 OF 10

DGN File: N:\Projects\2520_03\Sheet_Files\Structures\BOXES\2520_E1E-1331_SHT9.dgn

MARK	LOCATION	SIZE NO.	NO. BARS	LENGTH	TOTAL LENGTH	SKETCH
W16	WINGWALL	5	4	34'-11	139'-8	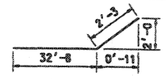
W17	WINGWALL	6	12	7'-6	90'-0	
W18	WINGWALL	6	2	34'-8	69'-4	
W19	WINGWALL	5	32	8'-0	256'-0	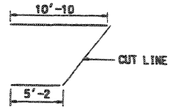 16 BAR(S) PER 1/2 SET 2 1/2 SET(S) REQ'D
W20	WINGWALL	5	28	5'-5	151'-8	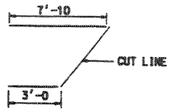 14 BAR(S) PER 1/2 SET 2 1/2 SET(S) REQ'D
D1	DOWELS	5	80	2'-3	180'-0	
T1	TIE	5	70	5'-0	350'-0	
T2	TIE	5	18	5'-0	90'-0	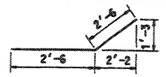
T3	TIE	5	10	5'-0	50'-0	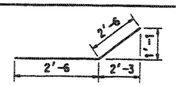
T4	TIE	5	5	6'-0	30'-0	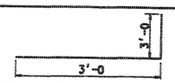
T5	TIE	5	5	5'-0	25'-0	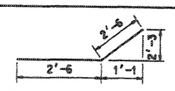
H1	HEADWALL	4	30	11'-4	339'-11	
H2	HEADWALL	4	24	3'-8	88'-1	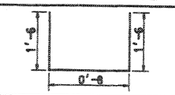
H3	HEADWALL	4	24	3'-0	72'-0	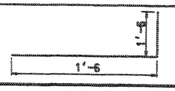
H4	HEADWALL	4	6	11'-11	71'-6	
H5	HEADWALL	4	24	11'-2	268'-0	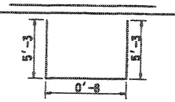
H6	HEADWALL	4	48	6'-0	288'-0	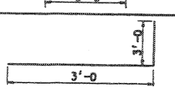
C1	CUTOFF WALL	4	6	26'-3	157'-3	
C2	HEADWALL	6	6	28'-8	172'-0	

MARK	LOCATION	SIZE NO.	NO. BARS	LENGTH	TOTAL LENGTH	SKETCH

MARK	LOCATION	SIZE NO.	NO. BARS	LENGTH	TOTAL LENGTH	SKETCH

SUMMARY OF COATED BARS

22,711'-11 OF NUMBER	4 BARS AT	0.668 LBS/FT =	15,171.6 LBS
17,336'-1 OF NUMBER	5 BARS AT	1.043 LBS/FT =	18,081.5 LBS
19,656'-2 OF NUMBER	6 BARS AT	1.502 LBS/FT =	29,523.6 LBS
2,908'-8 OF NUMBER	7 BARS AT	2.044 LBS/FT =	5,945.4 LBS
		TOTAL	68,722.0 LBS

NOTES:

ALL BARS ARE COATED

BAR SIZES ARE U.S. UNITS.

REINFORCING STEEL DIMENSIONS ARE OUT TO OUT OF BAR UNLESS OTHERWISE SPECIFIED.

SPLICES MAY BE OMITTED AT FABRICATORS OPTION...HOWEVER, IN SUCH CASE, FABRICATOR ASSUMES RESPONSIBILITY FOR FIT.

REVISIONS

NO.	DATE	BY	REMARKS

UTAH DEPARTMENT OF TRANSPORTATION
SALT LAKE CITY, UTAH
STRUCTURES DIVISION

DESIGN RH 02-03 CHECK HCB 02-03
DRAWN LM 02-03 CHECK HCB 02-03
QUANT. HCB 02-03 CHECK RH 02-03

APPROVAL RECOMM. ____ DATE ____ SENIOR BRIDGE ENGR.

APPROVED BY DOT ____ DATE ____ DOT BRIDGE ENGR.

WASHINGTON INTERCHANGE AT RP 13
10'-0 x 8'-0 BOX CULVERT
REINFORCING STEEL SCHEDULE II

PROJECT NUMBER * SP-15-1(20)13

WASHINGTON COUNTY

E1E-1331 DRG. NO.

SHT. 10 OF 10

DGN: File:N:\Projects\2828.45\Shared Files\Structures\2015ES\2828_E1E-1331_sht10.dgn
29-NOV-2883

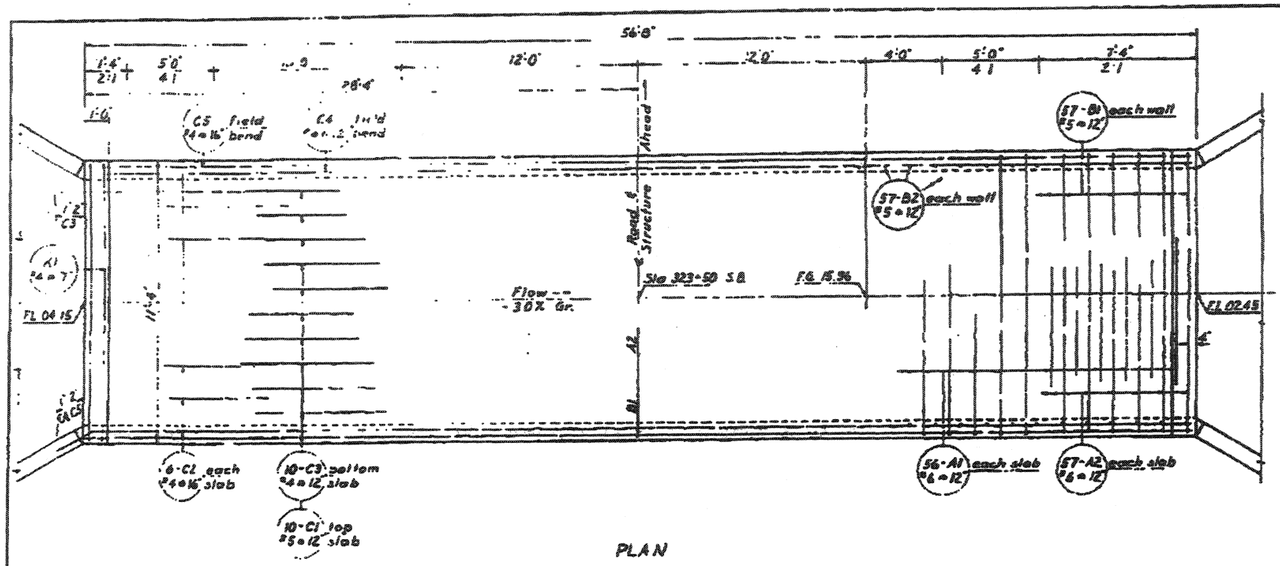

LOC	MARK	SIZE	NO BARS	L'GTH	TOTAL L'GTH	SKETCH
Slabs	A1	6	112	21'-6"	2408'-0"	
	A2	6	114	11'-0"	1254'-0"	
Walls	B1	5	114	15'-6"	1767'-0"	
	B2	5	114	9'-2"	1045'-0"	
Walls Slabs	C1	5	10	57'-6"	575'-0"	L - 36'-4" s - 1'-2"
	C2	4	12	67'-4"	808'-0"	L - 36'-4" s - 1'-0"
	C3	4	10	60'-0"	600'-0"	L - 55'-0"
	C4	4	16	60'-0"	960'-0"	L - 55'-0"
	C5	4	12	60'-0"	720'-0"	L - 53'-0" s - 1'-0"
Curbs	K1	4	4	13'-6"	54'-6"	11'-0"

3662'-0" of #6 bars @ 1.502 lb/ft = 5500.3 lb
3387'-8" of #5 bars @ 1.043 lb/ft = 3533.3 lb
3022'-6" of #4 bars @ 0.668 lb/ft = 2019.1 lb
Total Weight = 11,052.7 lb

Unless otherwise shown, all dimensions are out to out of bars

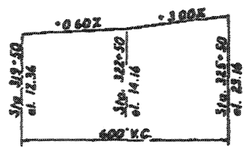

VERTICAL CURVE DATA

HORIZONTAL CURVE DATA
P.I. - 320+48.9
Δ - 29°28' Lt.
D - 1°00'
R - 5729.6'
T - 1499.6'
L - 2933.3'
Speed - 70 M.P.H.

FOR INFORMATION ONLY

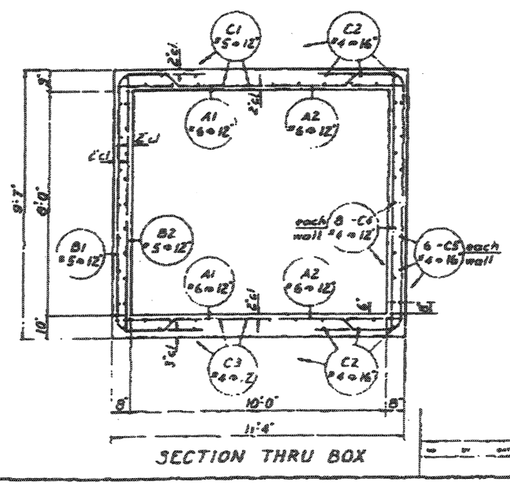

SECTION THRU BOX

GENERAL NOTES

Materials, construction, and workmanship shall be in accordance with the State Standard Specifications for Road and Bridge Construction, 1960 Edition, and supplements thereto which are in effect at the date of request for bids.

All reinforcing steel shall be intermediate grade A.A.S.H.O. designation M-31 and deformed per M-137.

Type II cement (low alkali) required.

DESIGN DATA

The design is in accordance with the A.A.S.H.O. Specifications of 1961 and interim specifications.

Loading: Interstate Alternate or H20-S16-44.

f'c - 1200 p.s.i.

fs - 20,000 p.s.i.

n - 10

QUANTITIES

Excavation for Structure (Unclassified)	55	cu. yd
Class A Concrete (AE)	81	cu. yd.
Reinforcing Steel	12,760	lb.
Mechanical Tamping	24	hr.

UTAH STATE DEPARTMENT OF HIGHWAYS
SALT LAKE CITY, UTAH
STRUCTURES DIVISION

MIDDLETON TO 1½ MI. NO. OF HARRISBURG JCT.
10'-0" x 8'-0" BOX CULVERT UNDERPASS

DESIGNED BY W.G.T.		I-15-1(14)9
DRAWN BY W.G.T.		323+50 S.B.
CHECKED BY W.G.T.	D.L. Sorensen	WASHINGTON
QUANTITIES BY		E-1330 1 - 2

FINAL 9-22-64

DGN: File: N:\Projects\2828.493\Sheets_Files\Structures\BRIDGES\2828_E1330_sht1.dgn
DV: 2828.2

LOC	MARK	SIZE	NO BARS	L'GTH	TOTAL L'GTH	SKETCH
Aprons	D1	4	24	13'-1"	314'-0"	a · 11'-0"
	D2		4	11'-6"	156'-8"	9'-3"
	D3			9'-7"		7'-6"
	D4			7'-10"		5'-9"
	D5			6'-1"		4'-0"
	D6	4	4	4'-4"		a · 2'-3" ; 2'-1" ; 1 set (D2 - D6) · 39'-2"
Aprons	E1	4	2	11'-6"	381'-4"	
	E2			12'-8"		
	E3			13'-10"		
	E4			15'-0"		
	E5			16'-2"		1 set (E1 - E11) · 190'-8"
	E6			17'-4"		
	E7			18'-6"		
	E8			19'-8"		
	E9			20'-10"		
	E10			22'-0"		
	E11	4	2	23'-2"		
Wing Walls	F1	4	4	13'-8"	161'-4"	
	F2			3'-2"		
	F3			5'-6"		1 set (F1 - F5) · 40'-4"
	F4			7'-10"		
	F5		4	10'-2"		
	F6	4	16	15'-2"	242'-8"	12'-7" ; 120°
Wing Walls	Ga	5	16	5'-2"	82'-8"	a · 2'-7" ; h · 3'-2"
	G1	5	4	12'-3"	500'-0"	a · 3'-0" ; h · 9'-3"
	G2			11'-9"		8'-9"
	G3			11'-4"		8'-4"
	G4			10'-11"		7'-11"
	G5			10'-6"		7'-6"
	G6			10'-1"		7'-1"
	G7			9'-7"		6'-7"
	G8			9'-2"		6'-2"
	G9			8'-9"		5'-9"
	G10			8'-4"		5'-4"
	G11			7'-11"		4'-11" ; 1 set (G1 - G13) · 125'-0"
	G12			7'-5"		4'-5"
	G13	5	4	7'-0"		a · 3'-0" ; h · 4'-0"
Extra @ W.W. Ftgs	L1	4	6	28'-7"	171'-6"	
	L2	4	12	5'-7"	67'-0"	
	L3	4	12	12'-7"	151'-0"	

582'-8" of #5 bars @ 1.043 #/ft · 607.7 lb
1645'-6" of #4 bars @ 0.668 #/ft · 1099.2 lb
Total Weight · 1706.9 lb
Unless otherwise shown, all dimensions are out to out of bars.

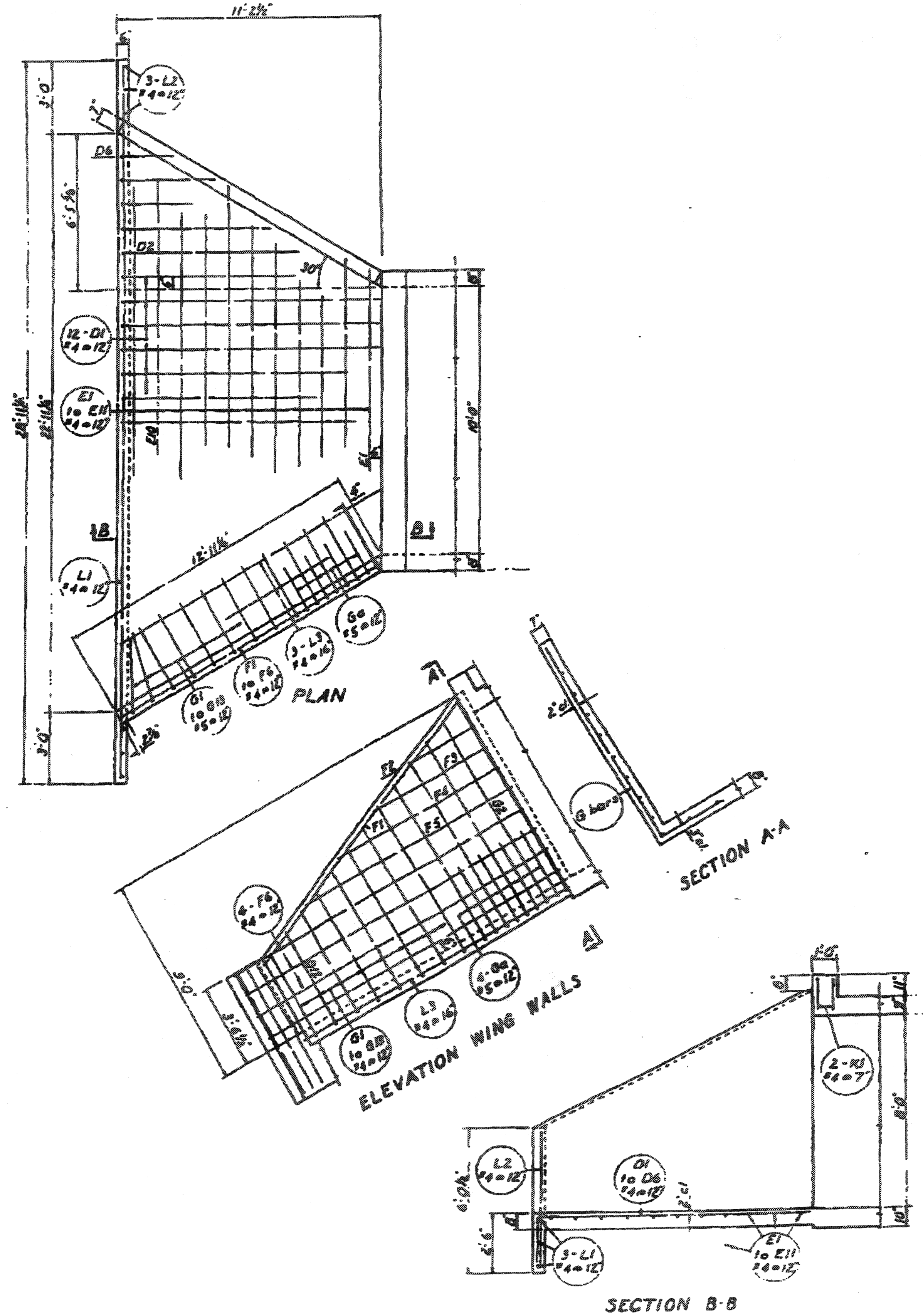

FOR INFORMATION ONLY

UTAH STATE DEPARTMENT OF HIGHWAYS
STRUCTURES DIVISION
MIDDLETON TO 1½ MI. NO. OF HARRISBURG JCT.
10'-0" x 8'-0" BOX CULVERT UNDERPASS
W.G.T.
W.G.T.
W.G.T.
Oct. 10, 1962
I-15-1(14)9
323 - 50 S B.
WASHINGTON
E-1330
2 of 2

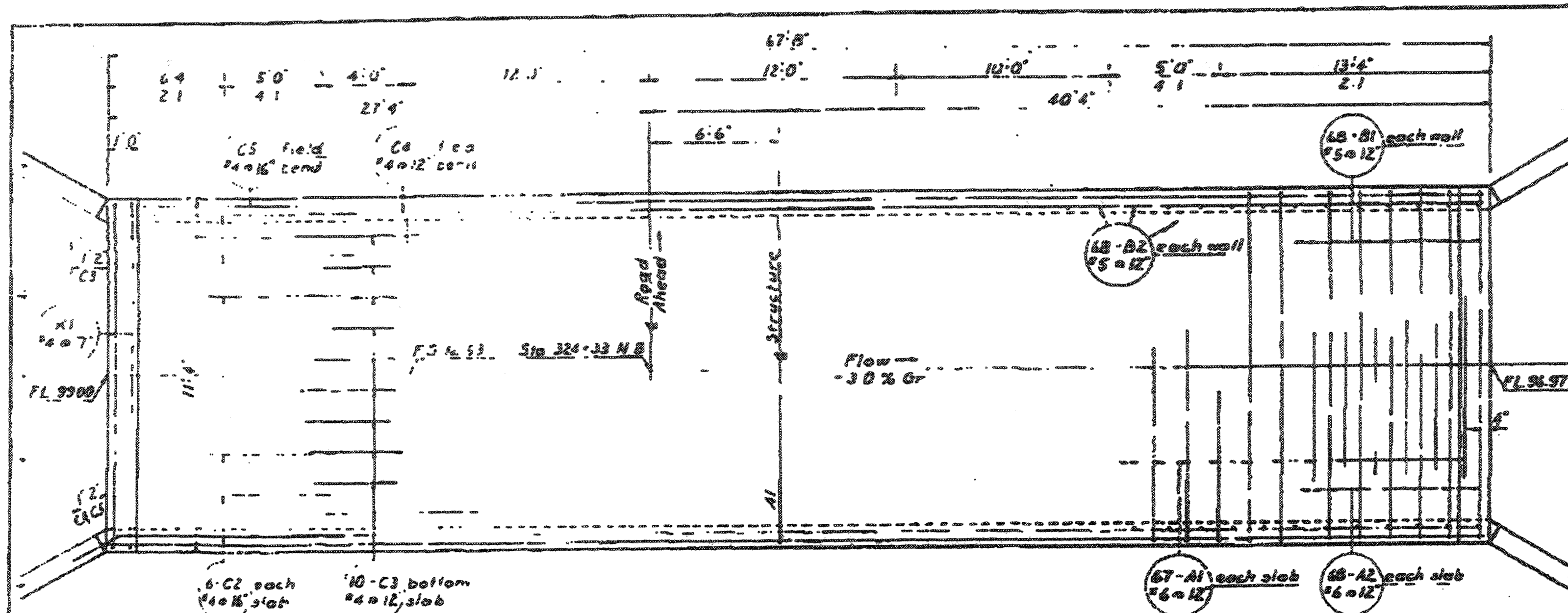

PLAN

LOC	MARK	SIZE	NO BARS	L'GTH	TOTAL L'GTH	SKETCH
Slabs	A1	6	134	21'6"	2881'0"	1'7" 10" 5" 7'0" 5" 1'7" 11'0" 5'8"
	A2	6	136	11'0"	1496'0"	
Walls	B1	5	136	15'6"	2108'0"	10" 9'2" 3'4"
	B2	5	136	9'2"	1246'8"	
Walls Slabs	C1	5	10	68'6"	685'0"	L = 67'4" s = 1'2"
	C2	4	12	68'4"	820'0"	67'4" s = 1'0"
	C3	4	10	71'0"	710'0"	10'0"
	C4	4	16	71'0"	1136'0"	10'0"
	C5	4	12	71'0"	852'0"	L = 10'0" s = 1'0"
Curbs	K1	4	4	13'8"	54'8"	1'4" 11'0"

4377'0" of #6 bars @ 1.502 lb/ft = 6574.3 lb
4039'8" of #5 bars @ 1.043 lb/ft = 4213.4 lb
3572'8" of #4 bars @ 0.668 lb/ft = 2386.5 lb
Total Weight = 13,174.2 lb

Unless otherwise shown all dimensions are out to out of bars

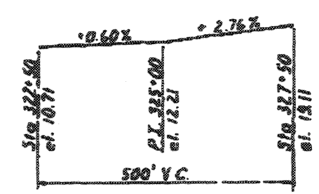

VERTICAL CURVE DATA

HORIZONTAL CURVE DATA

P.I. 322+75.68
Δ = 25°14' Lt.
D = 1°00'
R = 5279.6'
T = 1494.26'
L = 2923.33'
Speed = 70 M.P.H.

FOR INFORMATION ONLY

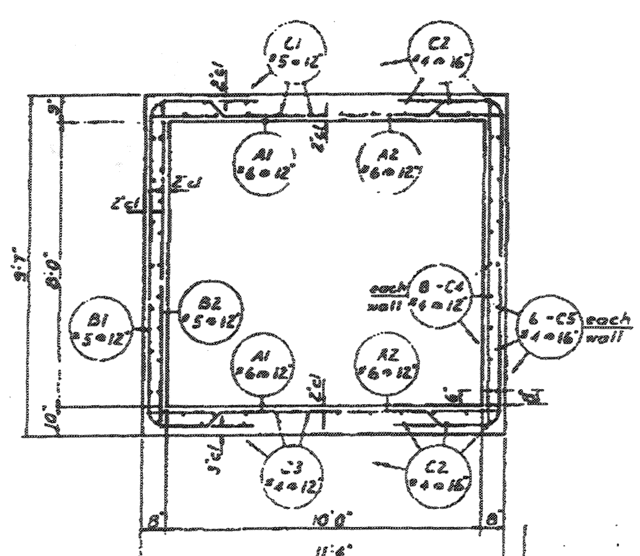

SECTION THRU BOX

GENERAL NOTES

Materials, construction, and workmanship shall be in accordance with the State Standard Specifications for Road and Bridge Construction, 1960 Edition, and supplements thereto which are in effect at the date of request for bids.

All reinforcing steel shall be intermediate grade A.A.S.H.O. designation M-31 and deformed per M-137.

Type II cement (low alkali) required.

DESIGN DATA

The design is in accordance with the A.A.S.H.O. Specifications of 1961 and interim specifications.

Loading: Interstate Alternate or H20-S16-44.
fc = 1200 p.s.i.
fs = 20,000 p.s.i.
n = 10

QUANTITIES

Excavation for Structure (Unclassified)	62	cu yd
Class A Concrete (AE)	93	cu. yd.
Reinforcing Steel	14,881	lb
Mechanical Tamping	28	hr.

UTAH STATE DEPARTMENT OF HIGHWAYS
SALT LAKE CITY, UTAH
STRUCTURES DIVISION

MIDDLETON TO 1½ MI. NO. OF HARRISBURG JCT.
10'0" x 8'0" BOX CULVERT UNDERPASS

Designed by W.G.T. | Drawn by W.G.T. | Quantities by W.G.T.

I-15-1( )-9
324+33 N.B.
WASHINGTON

REVISIONS

E-1331 | 1 of 2

Fall 9-22-64

106

CC	MARK	SIZE	NO BARS	LGTH	TOTAL LGTH	SKETCH
Aprons	D1	4	24	13'-1"	314'-0"	a = 11'-0"
	D2		4	11'-4"		9'-3"
	D3			9'-7"		7'-6"
	D4			7'-10"	156'-8"	5'-9"
	D5			6'-1"		4'-0"
	D6	4	4	4'-4"		a = 2'-3" 1 set (D2-D6) 39'-2"
Aprons	E1	4	2	11'-6"		
	E2			12'-8"		
	E3			13'-10"		
	E4			15'-0"		
	E5			16'-2"		
	E6			17'-4"	381'-4"	1 set (E1-E11) = 190'-8"
	E7			18'-6"		
	E8			19'-8"		
	E9			20'-10"		
	E10			22'-0"		
	E11	4	2	23'-2"		
Wing Walls	F1	4	4	13'-8"		
	F2			3'-2"		
	F3			5'-6"	161'-4"	
	F4			7'-10"		1 set (F1-F5) = 40'-4"
	F5		4	10'-2"		
	F6	4	16	15'-2"	242'-8"	12'-7"
Wing Walls	Ga	5	16	5'-2"	82'-8"	a = 2'-0" h = 3'-2"
	G1	5	4	12'-3"		a = 3'-0" h = 9'-3"
	G2			11'-9"		8'-9"
	G3			11'-4"		8'-4"
	G4			10'-11"		7'-11"
	G5			10'-6"		7'-6"
	G6			10'-1"		7'-1"
	G7			9'-7"	500'-0"	6'-7"
	G8			9'-2"		6'-2"
	G9			8'-9"		5'-9"
	G10			8'-4"		5'-4"
	G11			7'-11"		4'-11" 1 set (G1-G13) = 125'-0"
	G12			7'-5"		4'-5"
	G13	5	4	7'-0"		a = 3'-0" h = 4'-0"
Extra @ W.W. Fig.	L1	4	6	28'-7"	171'-6"	
	L2	4	12	5'-7"	67'-0"	
	L3	4	12	12'-7"	151'-0"	

582'-8" of #5 bars @ 1.043 #/ft = 607.7 lb
1645'-6" of #4 bars @ 0.668 #/ft = 1099.2 lb
Total Weight = 1706.9 lb

Unless otherwise shown, all dimensions are out to out of bars

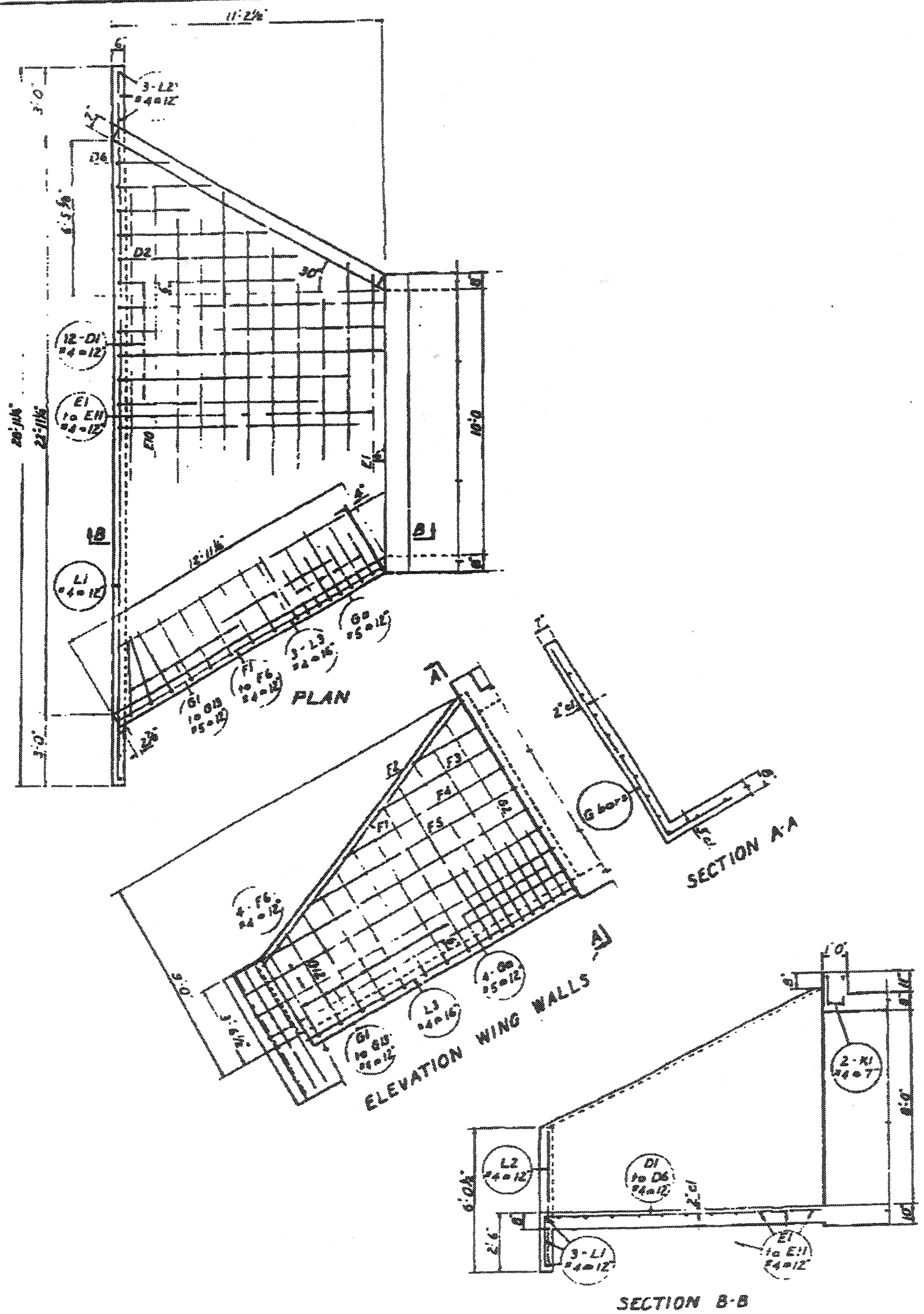

FOR INFORMATION ONLY

UTAH STATE DEPARTMENT OF HIGHWAYS
SALT LAKE CITY, UTAH
STRUCTURES DIVISION
MIDDLETON TO 1½ MI. NO. OF HARRISBURG JCT.
10'-0" x 8'-0" BOX CULVERT UNDERPASS

W.G.T.
W.G.T.
W.G.T.
Feb. 10, 1962

I-15-1(14)9
324-33 N.B.
WASHINGTON
E-1331
2 of 2

CONDUIT LEGEND

CONDUIT LINE STYLE	CONDUIT TYPE AND MINIMUM SIZE	ALLOWABLE CONDUCTOR TYPE
———	DUCT BANK: 1 - 4-MULTI-CONDUIT SYSTEM	FIBER OPTIC CABLES
———	DUCT BANK: 2 - 4-MULTI-CONDUIT SYSTEM	FIBER OPTIC CABLES
———	DUCT BANK: 4 - 4-MULTI-CONDUIT SYSTEM	FIBER OPTIC CABLES
—HV1-1/2——HV1-1/2—	1-½" HIGH VOLTAGE CONDUIT	120, 240, OR 480 VAC CONDUCTORS INCLUDING:
—HV2——HV2—	2" HIGH VOLTAGE CONDUIT	SIGNAL CONDUCTORS
—HV3——HV3—	3" HIGH VOLTAGE CONDUIT	VMS POWER CONDUCTORS
—HV4——HV4—	4" HIGH VOLTAGE CONDUIT	CAMERA POWER CONDUCTORS OR CAMERA COMPOSITE CABLES
—LV1-1/2——LV1-1/2—	1-½" LOW VOLTAGE CONDUIT	DETECTOR LOOP LEAD-IN CABLES
—LV2——LV2—	2" LOW VOLTAGE CONDUIT	VMS CONTROL CABLES
—LV3——LV3—	3" LOW VOLTAGE CONDUIT	CAMERA CABLES
—LV4——LV4—	4" LOW VOLTAGE CONDUIT	RWIS CABLES
—TAL1-1/2——TAL1-1/2—	1-½" TAIL CIRCUIT COMMUNICATIONS CONDUIT	FIBER OPTIC CABLES, COPPER COMM CABLES
—TAL2——TAL2—	2" TAIL CIRCUIT COMMUNICATIONS CONDUIT	FIBER OPTIC CABLES, COPPER COMM CABLES
—TAL3——TAL3—	3" TAIL CIRCUIT COMMUNICATIONS CONDUIT	FIBER OPTIC CABLES, COPPER COMM CABLES
—SPR2——SPR2—	2" SPARE CONDUIT	(EMPTY)
—SPR3——SPR3—	3" SPARE CONDUIT	(EMPTY)
—SPR4——SPR4—	4" SPARE CONDUIT	(EMPTY)
———	BURIED ELECTRIC CONDUIT	POWER CONDUCTORS
———	EXISTING BURIED ELECTRIC CONDUIT	(ADD NEW TO EXISTING CONDUCTORS AS NOTED)
———	EXISTING CONDUIT	(ADD NEW TO EXISTING CONDUCTORS AS NOTED)
———	EXISTING DUCT BANK: 1 - 4-MULTI-CONDUIT SYSTEM	
———	EXISTING DUCT BANK: 2 - 4-MULTI-CONDUIT SYSTEM	
———	EXISTING DUCT BANK: 4 - 4-MULTI-CONDUIT SYSTEM	
-PWR1-1/2—PWR1-1/2—	1-½" POWER CONDUIT	CONDUCTORS WITH VOLTAGE 120V OR GREATER, USUALLY ONLY BETWEEN POWER SERVICE POINT AND POWER SERVICE PEDESTAL
-T/LV3——T/LV3—	3" CONDUIT WITH TWO 1" INNERDUCTS: (ONE 1" TAIL CIRCUIT COMMUNICATIONS INNERDUCT ONE 1" LOW VOLTAGE INNERDUCT)	FIBER OPTIC CABLES LOW VOLTAGE CONDUCTORS (SAME AS ABOVE)

NOTE: LOWER-CASE TEXT INDICATES EXISTING CONDUIT

AERIAL LEGEND

CONDUIT LINE STYLE	DESCRIPTION
———	EXISTING OVERHEAD POWER LINES
———	OVERHEAD POWER LINES

CONDUCTOR LEGEND

CALLOUT	REQ'D ITEM
X-#Y(Z)	(X) AWG # (Y) POWER CONDUCTORS FOR (Z)
X-#Y(GND)	(X) AWG # (Y) GROUND WIRE
IE: 2-#6(VMS CAB)	INDICATES (2)AWG#6 POWER
1-#8(GND)	CONDUCTORS REQ'D AND (1)AWG#8 GROUND WIRE REQ'D FOR A VMS CABINET.

ELECTRICAL SCHEMATIC LEGEND

EXISTING	SYMBOL	EQUIPMENT
		BREAKER
(M)	M	METER
N	N	NEUTRAL LUG
EG	EG	EQUIPMENT GROUND LUG
		GROUND ROD
		TRANSFORMER
		SWITCH

NOTE: DASHED LINES INDICATE EXISTING EQUIPMENT

DETAIL CALLOUT LEGEND

CALLOUT ON PLAN	MEANING
'X' / 'Y'	SEE DETAIL 'X' ON SHEET 'Y'

PROJECT NOTE LEGEND

CB	CONNECT NEW CONDUIT TO EXISTING JUNCTION BOX OR VAULT
BC	INSTALL NEW BOX OR VAULT IN EXISTING CONDUIT RUN
CC	CONNECT NEW CONDUIT TO EXISTING CONDUIT
SP	SPLICE POINT

STANDARD CALL OUT FOR CONDUCTOR INSTALLATION

LV3 - LOWER CASE TEXT INDICATES EXISTING CONDUIT

1-#2C - UPPER CASE TEXT INDICATES REQUIRED NEW CONDUCTORS

ABBREVIATIONS

ATMS	ADVANCED TRAFFIC MANAGEMENT SYSTEM
CAB	CABINET
CCTV	CLOSED CIRCUIT TELEVISION
CCVC	CAMERA CONTROL AND VIDEO CABLE
DLC	DETECTOR LOOP LEAD-IN CABLES
FRE	FIBERGLASS REINFORCED EPOXY
GND	GROUND CONDUCTOR
HDPE	HIGH DENSITY POLYETHYLENE
HFC	HYBRID FIBER CABLE
P	PLASTIC
PC	POLYMER CONCRETE
PCCP	PORTLAND CEMENT CONCRETE PAVEMENT
PTCC	PAN-TILT CONTROL CABLE
PTZ	PAN / TILT / ZOOM
PWR	POWER
RMS	RAMP METER STATION
ROW	RIGHT-OF-WAY
RWIS	ROADWAY WEATHER INFORMATION SYSTEM
## SMF	SINGLE MODE FIBER (## INDICATES NUMBER OF STRANDS)
TMS	TRAFFIC MONITORING STATION
TSC	TRAFFIC SIGNAL CONTROLLER
VAC	VOLTS (ALTERNATING CURRENT)
VID	VIDEO
VMS	VARIABLE MESSAGE SIGN
WP	WORKING POINT

EQUIPMENT LEGEND

FUTURE OR EXISTING	REQ'D	EQUIPMENT TYPE
		334, VMS, OR ATMS CABINET (WITH CABINET NUMBER)
		SIGNAL CABINET
		CCTV CAMERA / PTZ / POLE AND FOUNDATION
		TYPE 1 FREEWAY VARIABLE MESSAGE SIGN (VMS) ASSEMBLY
		UNDERGROUND POWER SERVICE PEDESTAL
PS	PS	POWER SERVICE POINT
		POWER POLE
		METER ON POLE
		DETECTOR LOOP
		PAD MOUNTED TRANSFORMER
		POLE MOUNTED TRANSFORMER
		ROADWAY WEATHER INFORMATION SYSTEM
		POLE
		ADVANCE FLASHING BEACON SIGN ON POLE
		MASTARM WITH SIGNAL HEADS
		SIGNAL HEADS
		METER-ON SIGNAL HEAD

JUNCTION BOX LEGEND

EXISTING	REQ'D	PAY ITEM NAME
I-PC	I-PC	TYPE I POLYMER CONCRETE JUNCTION BOX
II-PC	II-PC	TYPE II POLYMER CONCRETE JUNCTION BOX
III-PC	III-PC	TYPE III POLYMER CONCRETE JUNCTION BOX
I-P	I-P	TYPE I PLASTIC JUNCTION BOX
II-P	II-P	TYPE II PLASTIC JUNCTION BOX

REVISIONS				REMARKS
NO	DATE	APPR.		

UTAH DEPARTMENT OF TRANSPORTATION
STANDARD DRAWINGS FOR ROAD AND BRIDGE CONSTRUCTION
SALT LAKE CITY, UTAH

RECOMMENDED FOR APPROVAL — JULY 03,2002 — DATE
CHAIRMAN STANDARDS COMMITTEE
APPROVED — JULY 03,2002 — DATE
DEPUTY DIRECTOR

STANDARD DRAWING TITLE

LEGEND SHEET

STD DWG
AT 1

TRENCHED CONDUIT

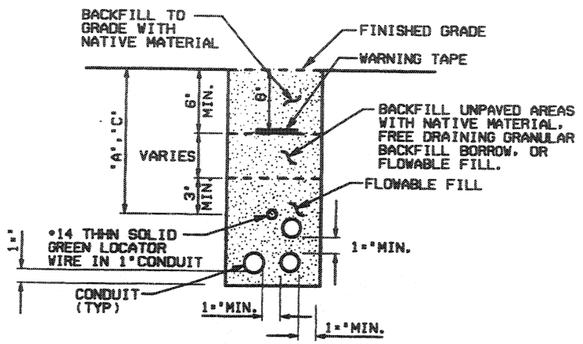

NON-MULTIDUCT CONDUIT

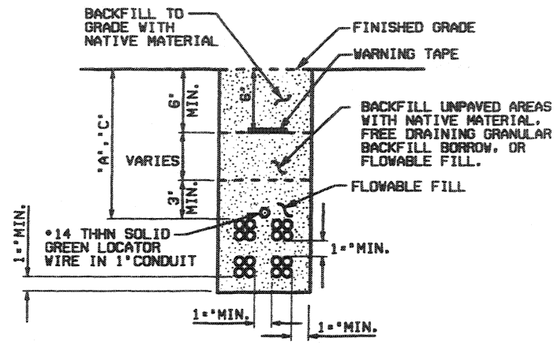

MULTIDUCT CONDUIT

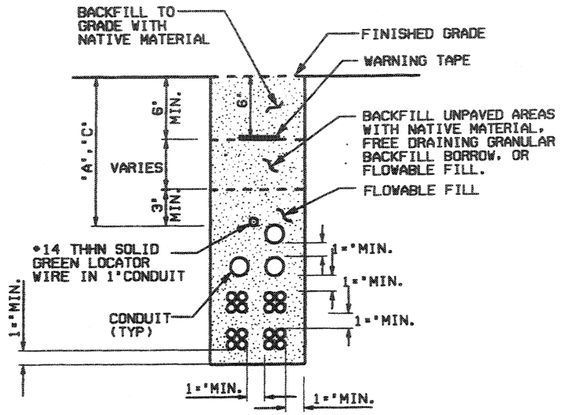

MULTIDUCT AND NON-MULTIDUCT CONDUIT

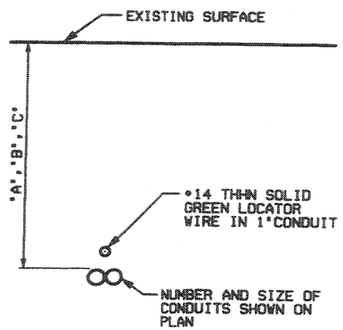

CONDUIT BORED, JACKED, OR DRILLED

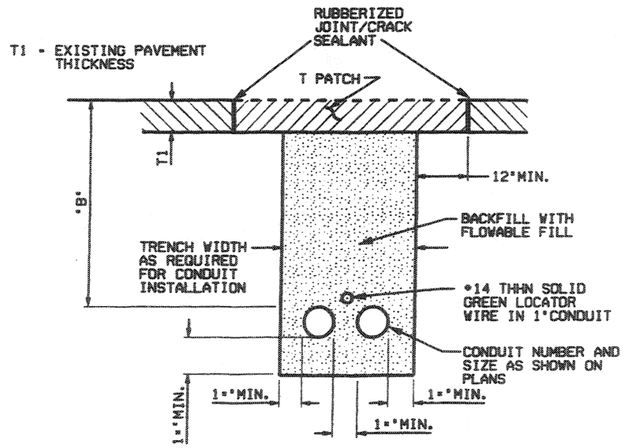

CONDUIT TRENCHED UNDER
ASPHALT PAVEMENT
RESTORED WITH T PATCH

TABLE 1. T PATCH RESTORATION

EXISTING ASPHALT PAVEMENT THICKNESS (T1) IN INCHES	RESTORATION T PATCH THICKNESS IN INCHES
0 - 3"	3"
3" - 6	MATCH EXISTING DEPTH
6 OR GREATER	6

TABLE 2. CONDUIT DEPTH

	DEPTH IN INCHES	AREA
A	24	PAVED DITCHES, UNLINED DITCHES, GUTTERS, SIDEWALK
B	36	HIGHWAY RIGHT OF WAY UNDER ASPHALT PAVEMENT SURFACE
C	60	W/IN 20FT OF PAVEMENT EDGE WHERE SIGNS OR DELINEATORS PRESENT

REVISIONS

NO.	DATE	APPR	REMARKS

UTAH DEPARTMENT OF TRANSPORTATION
STANDARD DRAWINGS FOR ROAD AND BRIDGE CONSTRUCTION
SALT LAKE CITY, UTAH

RECOMMENDED FOR APPROVAL — JULY 03,2002 DATE

CHAIRMAN STANDARDS COMMITTEE
APPROVED — JULY 03,2002 DATE

DEPUTY DIRECTOR

CONDUIT DETAILS
STANDARD DRAWING TITLE

STD DWG
AT 6

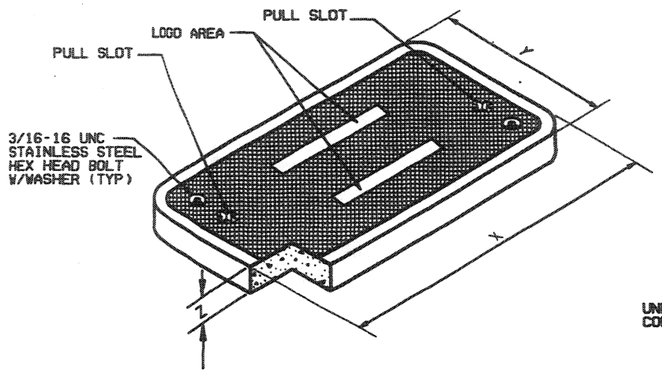

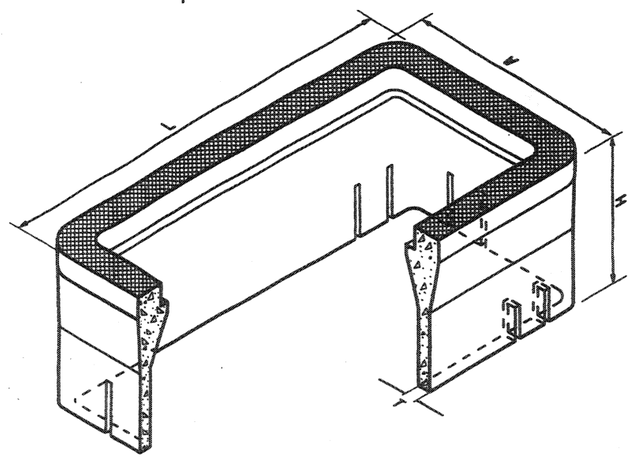

BOX AND LID DIMENSIONS

BOX TYPE	"L" INCH	"W" INCH	"H" INCH	"T" INCH	"X" INCH	"Y" INCH	"Z" INCH
I-PC	25	16	24	1"	23"	13"	2
II-PC	37"	26	24	1"	35"	24	3
III-PC	49"	32"	24	2	47"	38"	3

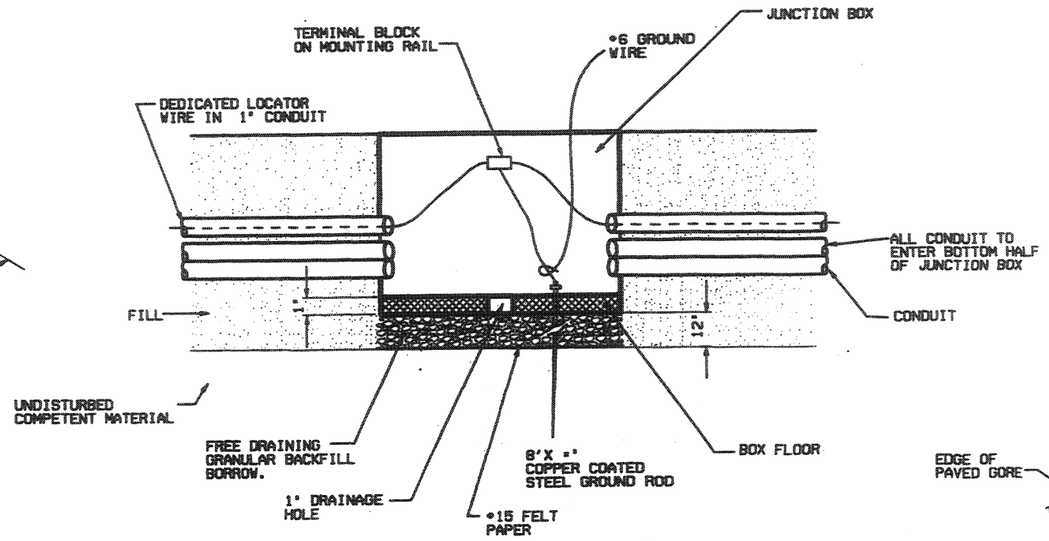

JUNCTION BOX CONDUIT PENETRATION DETAIL

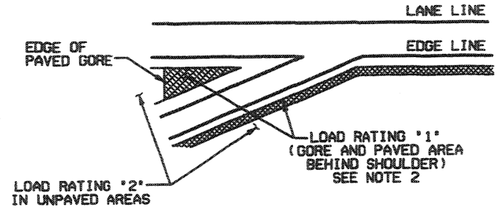

FREEWAY APPLICATION

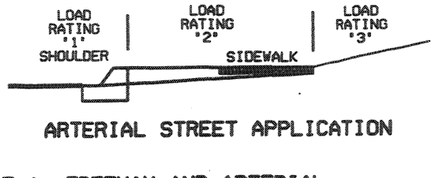

ARTERIAL STREET APPLICATION

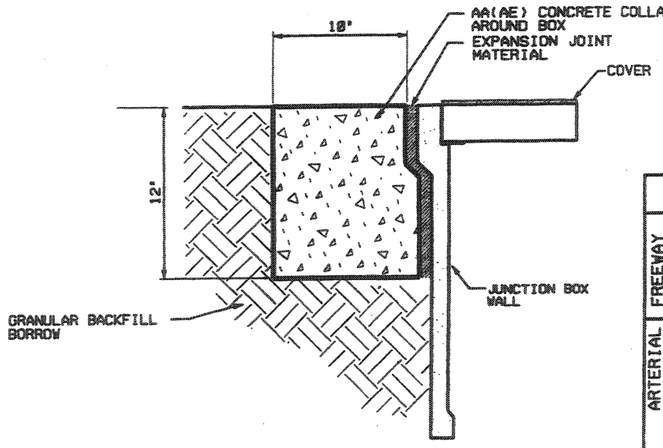

JUNCTION BOX CONCRETE COLLAR DETAIL

TABLE 1. FREEWAY AND ARTERIAL STREET APPLICATIONS

	APPLICATION	LOAD RATING 1	2	3
FREEWAY	INCIDENTAL TRAFFIC: PAVED GORE, PAVED AREA BEHIND SHOULDER	X		
FREEWAY	ALL OTHER AREAS		X	
ARTERIAL	PAVED SHOULDER OUT OF TRAFFIC	X		
ARTERIAL	NON-RAISED MEDIAN, INDUSTRIAL/COMMERCIAL DRIVEWAYS	X		
ARTERIAL	PARKWAY/SIDEWALK		X	
ARTERIAL	BEHIND SIDEWALK, NOT WHEEL LOADING ACCESSIBLE			X

TABLE 2. JUNCTION BOX LID STATIC VERTICAL LOAD RATING

LOAD RATING	COVER ENCLOSURE	DESIGN LOAD (LB)	TEST LOAD (LB)	TEST AREA (INCH)
1	HS20	21000	45000	10 X 20
2	INCIDENTAL TRAFFIC (10K)	10000	22500	10 X 20
3	POLYMER CONCRETE	8000	12000	10 X 10

NOTES:

1. BOX TITLE NEEDS TO BE STAMPED INTO THE LID FROM THE FACTORY. (SEE SECTION 13554 PART 2.2.H).
2. DO NOT PLACE JUNCTION BOXES IN THE TRAVELED-WAY OR ON FREEWAY SHOULDERS.

REVISIONS

NO.	DATE	APPR.	REMARKS
1	10/30/02	C.N.	CORRECTED CONDUIT SIZE " TO 1" IN THE JUNCTION BOX CONDUIT PENETRATION DETAIL
2	3/20/03	J.R.	LARGER TYPE II-PC BOX AND LOAD RATING LOCATIONS NO LONGER IN TRAVELED WAY. NEW NOTE 1. NOTE 2 ADDED.

UTAH DEPARTMENT OF TRANSPORTATION
STANDARD DRAWINGS FOR ROAD AND BRIDGE CONSTRUCTION
SALT LAKE CITY, UTAH

RECOMMENDED FOR APPROVAL — APR.24.2003 DATE

CHAIRMAN STANDARDS COMMITTEE APPROVED — APR.24.2003 DATE

DEPUTY DIRECTOR

POLYMER-CONCRETE JUNCTION BOX DETAILS

STANDARD DRAWING TITLE

STD DWG
AT 7

DGN FILE: B:\ESD\STANDARD_DRAWINGS\IMPERIAL\APPROVED\ATNSVAT87.DGN
5-OCT-2003

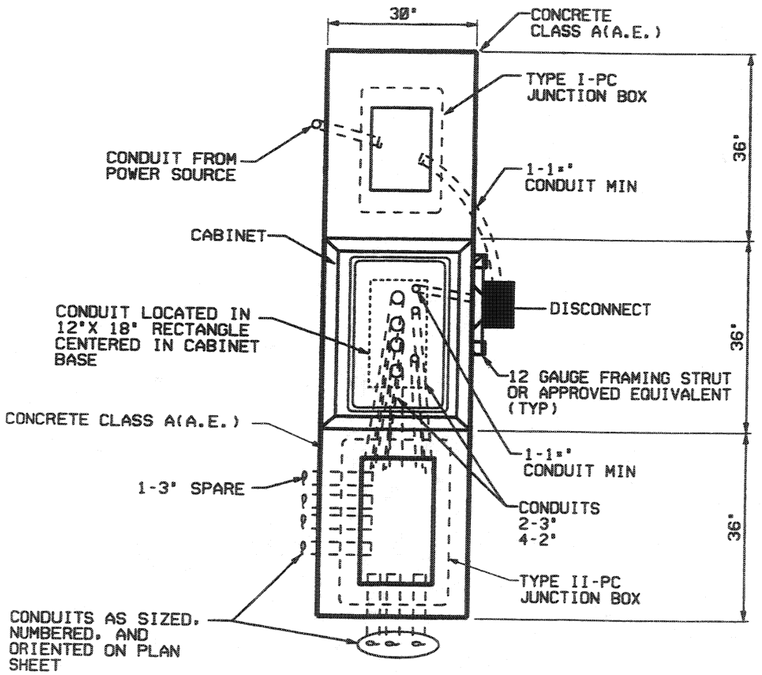

ATMS CABINET - PLAN VIEW

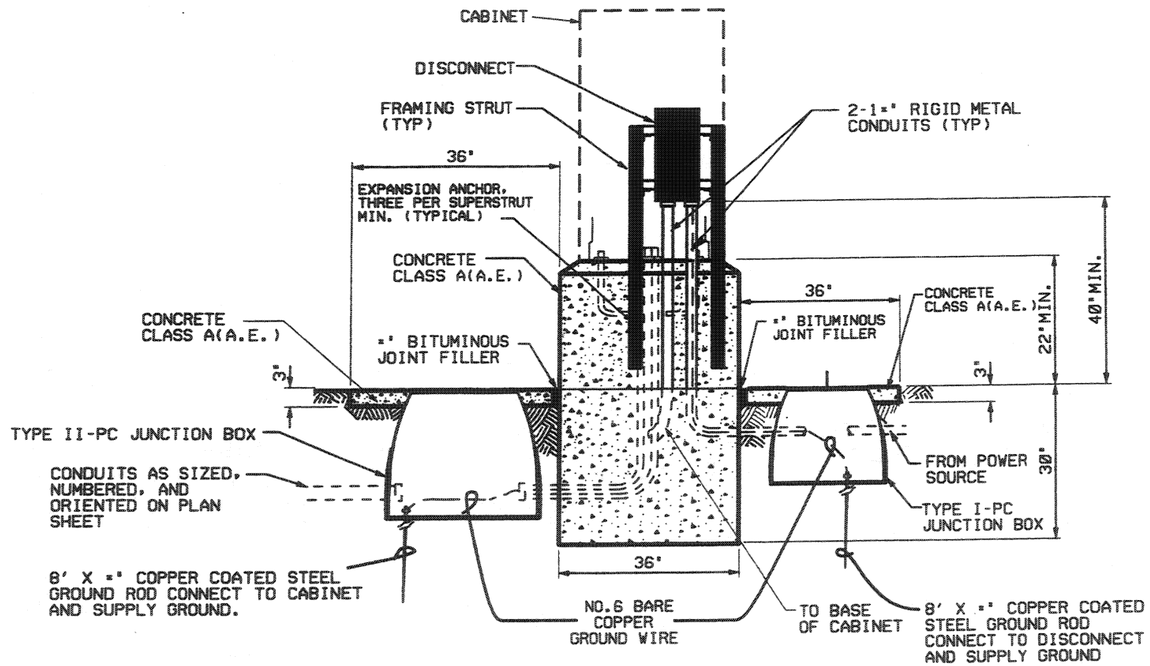

ATMS CABINET - SIDE VIEW

ATMS CABINET WITH 120V DISCONNECT

REVISIONS

NO.	DATE	APPR.	REMARKS

UTAH DEPARTMENT OF TRANSPORTATION

STANDARD DRAWINGS FOR ROAD AND BRIDGE CONSTRUCTION
SALT LAKE CITY, UTAH

JULY 03,2002
DATE

RECOMMENDED FOR APPROVAL

JULY 03,2002
DATE

CHAIRMAN STANDARDS COMMITTEE
APPROVED

DEPUTY DIRECTOR

ATMS CABINET W/120V DISCONNECT

STANDARD DRAWING TITLE

STD DWG
AT 8

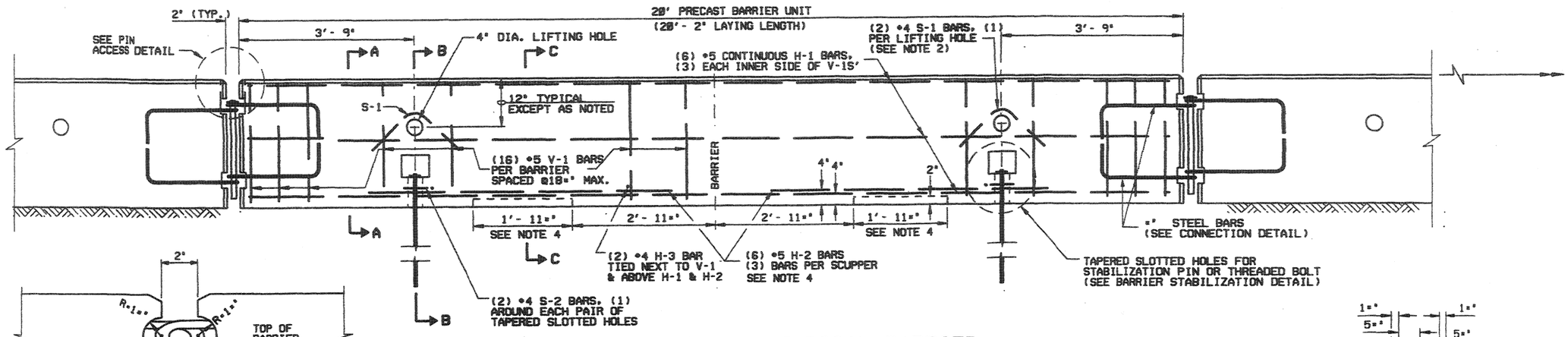

ELEVATION - TYPICAL BARRIER

MASS: 3.9 TONS PER PANEL

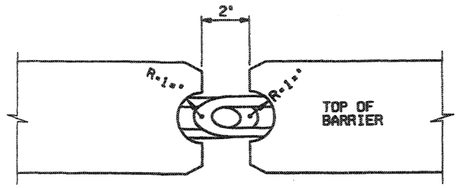

PIN ACCESS DETAIL

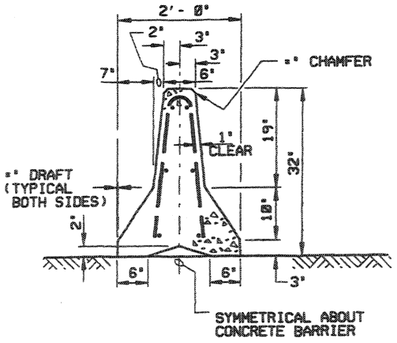

SECTION A-A

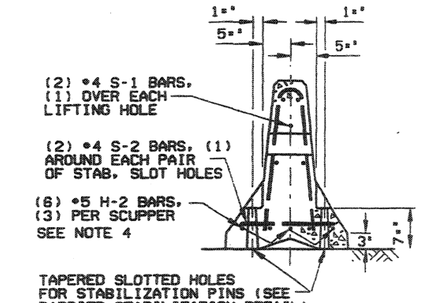

SECTION B-B

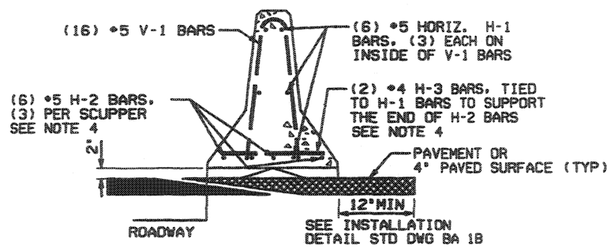

SECTION C-C

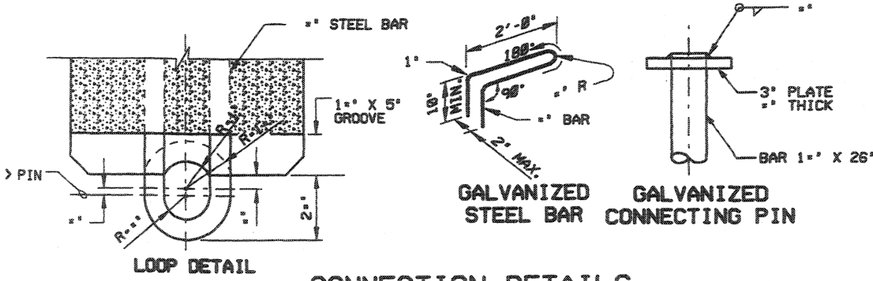

LOOP DETAIL — GALVANIZED STEEL BAR — GALVANIZED CONNECTING PIN

CONNECTION DETAILS

(SEE NOTE 1)

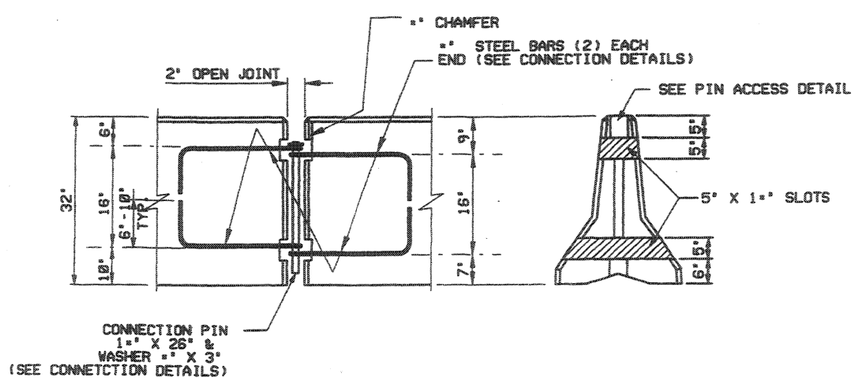

LOOP LOCATION — BARRIER SLOT DETAIL

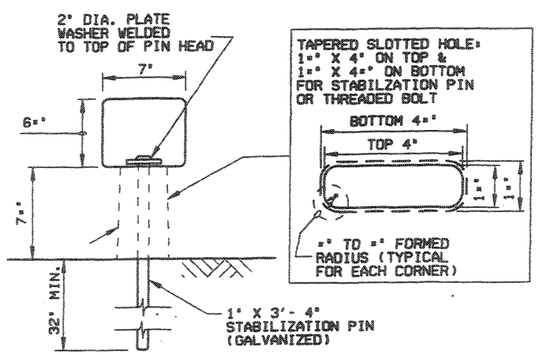

BARRIER STABILIZATION DETAIL

(SEE NOTE 3 ON STD DWG BA 1B)

NOTES:

1. USE ASTM A 36 STEEL FOR CONNECTION PIN, CONNECTION LOOPS, AND STABILIZATION PINS. A ONE PIECE PIN WITH A 3 INCH ROUNDED TOP MAY BE USED IN PLACE OF THE DETAILED CONNECTION PIN IF THE ONE PIECE PIN MEETS ASTM A 36 REQUIREMENTS.
2. USE A 4 INCH WHITE PVC SLEEVE TO FORM THE LIFTING HOLES. LEAVE SLEEVE IN PLACE AFTER CASTING.
3. PROVIDE A MINIMUM OF 12 INCH OF PAVED SURFACE BEHIND BARRIER.
4. PROVIDE BLOCK OUT AND REINFORCING STEEL FOR SCUPPERS WHEN NOTED ON PLANS.
5. PLACE AN ADEQUATE AMOUNT OF SILICONE ADHESIVE ON BOTTOM OF WASHER BEFORE INSERTING PIN TO HOLD IN PLACE AND PREVENT EASY HAND REMOVAL.

NO.	DATE	APPR.	REMARKS
1	08/06/02	JJ	CORRECTED DIMENSION BOTTOM RIGHT CORNER SECTION B-B

REVISIONS

UTAH DEPARTMENT OF TRANSPORTATION
STANDARD DRAWINGS FOR ROAD AND BRIDGE CONSTRUCTION
SALT LAKE CITY, UTAH

RECOMMENDED FOR APPROVAL — DEC. 19,2002 DATE

CHAIRMAN STANDARDS COMMITTEE APPROVED — DEC. 19,2002 DATE

DEPUTY DIRECTOR

STANDARD DRAWING TITLE

PRECAST CONCRETE FULL BARRIER STANDARD SECTION

STD DWG
BA 1A

DGN FILE: S:\ESD\STANDARD_DRAWINGS\IMPERIAL\APPROVED\BARRIERS (BA)\BA01A.DGN
15-OCT-2002

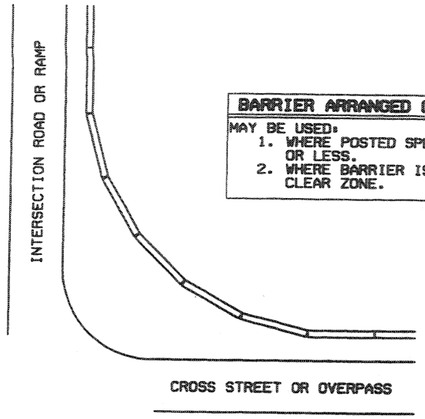

BARRIER ARRANGED ON A CURVE

MAY BE USED:
1. WHERE POSTED SPEED IS 35 MPH OR LESS.
2. WHERE BARRIER IS OUTSIDE THE CLEAR ZONE.

CURVED LAYOUT

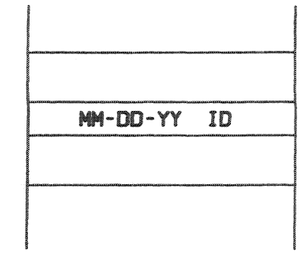

BARRIER MARKINGS

SEE NOTE 6

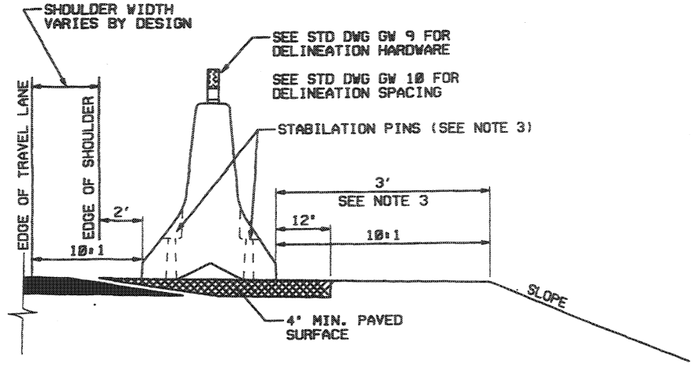

STANDARD INSTALLATION

METAL REINFORCEMENT TABLE				
MARK	LOCATION	BAR SIZE	(NO. BARS)	SKETCH
H-1	HORIZONTAL IN BARRIER TIED INSIDE V-1 BARS	#5	(6)	19'-3"
H-2	CENTERED ABOVE SCUPPERS LONG. & TRANSVERSELY	#5	(6)	6'-6"
H-3	TIED ABOVE H-1 BARS TO SUPPORT H-2, TIED TO V-1	#4	(2)	1'-6"
S-1	HORIZ. IN TOP OF WING WALL & IN FLOOR BACK WALL	#4	(2)	2'-5", LIFTING HOLE, 90°, 3"R
S-2	HORIZ. AROUND SLOTS BETWEEN V-I SCUPPERS	#4	(2)	1"R, 5'-1" BAR W/(4) 1"R BENDS & MIN. 1'-0" OVERLAP, SLOTS, 7", 1'-6", 1" MIN. CLEAR TO BAR
V-1	VERTICAL IN BARRIER(3) EACH END & (2) AT EACH SCUPPER	#5	(16)	2"R, TOTAL LENGTH 4'-9", 12°, 9", 4", 2'-1"

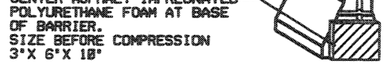

BARRIER SEAL

SEE NOTE 8

TABLE OF MAXIMUM TAPERS OUTSIDE SHY LINE	
DESIGN SPEED(MPH)	TAPER
70	20:1
60	18:1
55	16:1
50	14:1
45	12:1
40	10:1
35	8:1

TABLE 1
SEE NOTE 1

TABLE OF MAXIMUM TAPERS INSIDE SHY LINE	
DESIGN SPEED(MPH)	TAPER
70	30:1
60	26:1
55	24:1
50	21:1
45	18:1
40	16:1
35	13:1

TABLE 2
SEE NOTE 1

NOTES:

1. USE APPROPRIATE TAPER RATE FOR BARRIER PLACEMENT FROM TABLE 1 OR TABLE 2.
2. PIN ALL BARRIER SECTION TOGETHER AT CONNECTION LOOPS.
3. THE CONCRETE BARRIER 'STANDARD INSTALLATION' DESIGN ALLOWS FOR 3 FEET OF OUTWARD LATERAL MOVEMENT IF THE BARRIER IS STRUCK. USE STABILIZATOR PINS WHEN BARRIER PLACEMENT REQUIREMENTS DO NOT ALLOW FOR 3 FEET OUTWARD LATERAL MOVEMENT.
4. USE ASTM A 36 STEEL FOR CONNECTION PIN, CONNECTION LOOPS, AND STABILIZATION PINS. USE A ONE PIECE PIN WITH A 3 INCH ROUNDED TOP PLACE OF THE CONNECTION PIN THE ONE PIECE PIN MEETS ASTM A 36 REQUIREMENTS.
5. USE A 4 INCH WHITE PVC SLEEVE TO FORM THE LIFTING HOLES. LEAVE SLEEVE IN PLACE AFTER CASTING.
6. MARK EACH BARRIER WITH # INCH NUMBERS INDICATING THE DATE OF CASTING AND IDENTIFICATION NUMBER SUPPLIED BY THE INSPECTOR, IMPRESSED # INCH DEEP INTO THE TOP CENTER OF THE BARRIER.
7. USE COATED REINFORCING STEEL EXCEPT AS NOTED.
8. DO NOT USE BARRIER SEAL WHEN SCUPPERS ARE PRESENT ON BARRIER.

REVISIONS				
NO.	DATE	APPR.	REMARKS	
1	10/30/02	D.	SCHANDE	DIMENSIONS OF NUMBERS TO 1" IN NOTE 6

UTAH DEPARTMENT OF TRANSPORTATION
STANDARD DRAWINGS FOR ROAD AND BRIDGE CONSTRUCTION
SALT LAKE CITY, UTAH

RECOMMENDED FOR APPROVAL — DEC.19,2002 DATE

CHAIRMAN STANDARDS COMMITTEE APPROVED — DEC.19,2002 DATE

DEPUTY DIRECTOR

PRECAST CONCRETE FULL BARRIER STANDARD SECTION

STANDARD DRAWING TITLE

STD DWG
BA 1B

DGN FILE: G:\ENGINEERING\STANDARD_DRAWINGS\IMPERIAL\APPROVED\BARRIERS\BA1B.DGN
18-OCT-2002

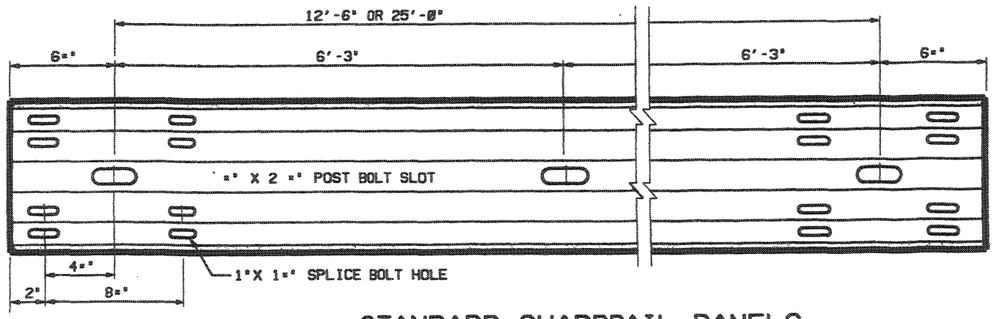

STANDARD GUARDRAIL PANELS

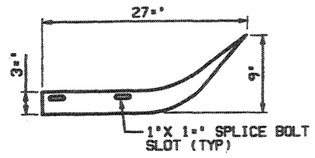

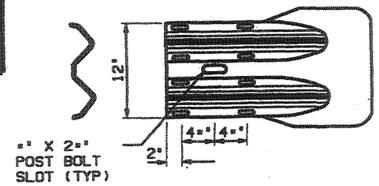

END SECTION (FLARED)

USE END SECTION (FLARED) WHEN TRAILING END IS OUTSIDE OPPOSING TRAFFIC CLEAR ZONE.

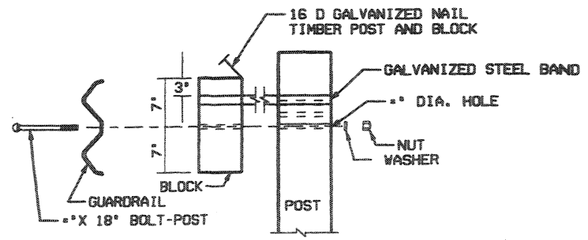

WOOD POST TO RAIL TYPICAL

USE BOTTOM HOLE FOR INTIAL INSTALLATION

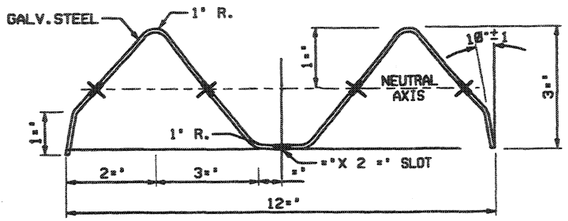

SECTION THRU RAIL ELEMENT

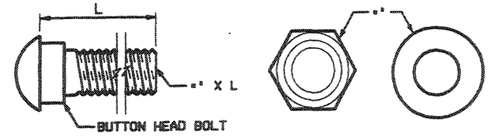

GALVANIZED BOLTS, NUTS, WASHERS

	L
SPLICE BOLTS (WASHER NOT REQ'D.)	1"
STEEL BOLT W/ WOOD BLOCK	10"
WOOD POST W/ WOOD BLOCK	18"
WOOD POST W/WOOD BLOCK (MEDIAN)	25"

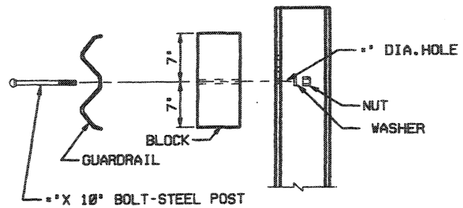

STEEL POST TO RAIL TYPICAL

USE BOTTOM HOLE FOR INTIAL INSTALLATION

NOTES:

1. SEE INSTALLATION DETAIL STD DWG BA 4B FOR POST LENGTH REQUIREMENTS.
2. 84 INCH POST MARKING: WOOD POST, BRAND POST WITH 1" INCH X 2 INCH MARKING L84, STEEL POST STAMP POST WITH 1" INCH X 2 INCH MARKING L84.
3. DO NOT USE WASHERS ON RAIL SPLICE CONNECTION.
4. A COMPOSITE OR PLASTIC BLOCK CAN BE SUBSTITUTED FOR THE NOTCHED WOOD BLOCK ON STEEL POST INSTALLATION. NCHRP-350 COMPLIANCE REQUIRED.

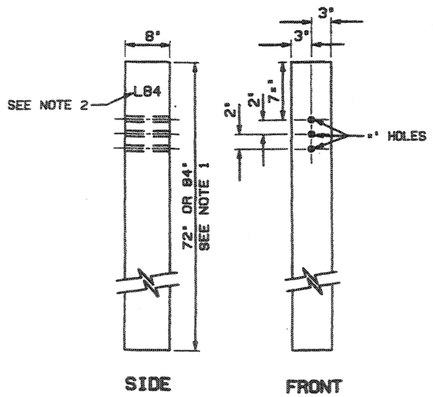

6" X 8" WOOD POST

(SEE NOTE 1)

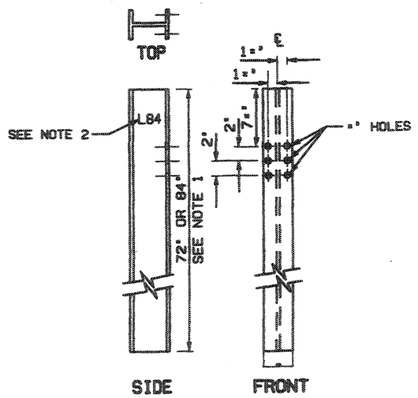

W6 X 8.5 STEEL POST

(SEE NOTE 1)

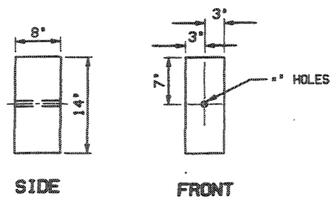

6" X 8" WOOD BLOCK

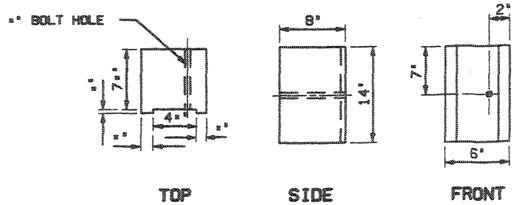

6" X 8" NOTCHED WOOD BLOCK

(SEE NOTE 3)

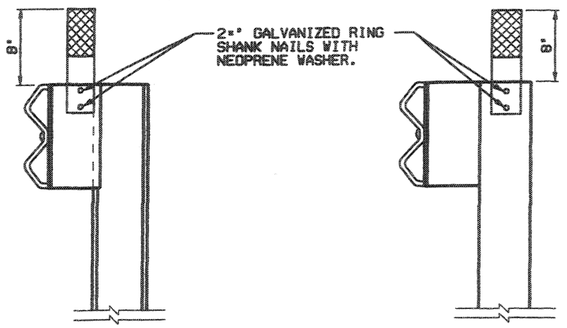

DELINEATOR DETAIL

STEEL POST W/WOOD OR COMPOSITE BLOCK

SEE STD DWG GW 9 FOR HARDWARE AND GW 10 FOR PLACEMENT

DELINEATOR DETAIL

WOOD POST W/ WOOD BLOCK

SEE STD DWG GW 9 FOR HARDWARE AND GW 10 FOR PLACEMENT

REVISIONS

NO.	DATE	APPR.	REMARKS

UTAH DEPARTMENT OF TRANSPORTATION
STANDARD DRAWINGS FOR ROAD AND BRIDGE CONSTRUCTION
SALT LAKE CITY, UTAH

RECOMMENDED FOR APPROVAL — JULY 03, 2002 DATE

CHAIRMAN STANDARDS COMMITTEE APPROVED — JULY 03, 2002 DATE

DEPUTY DIRECTOR

STANDARD DRAWING TITLE

BEAM GUARDRAIL HARDWARE

STD DWG
BA 4

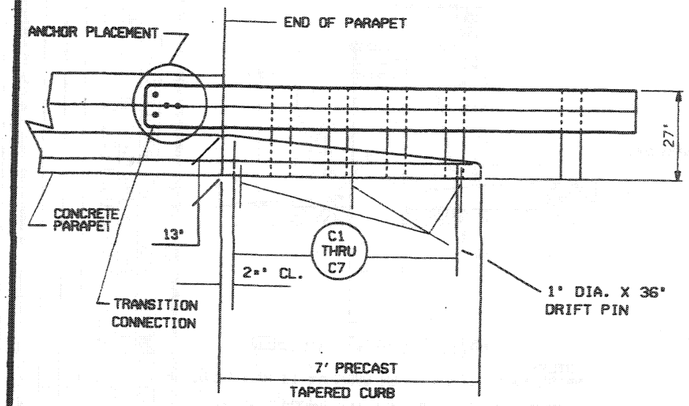

ELEVATION
(RIGHT SIDE SHOWN LEFT SIDE SIMILAR)

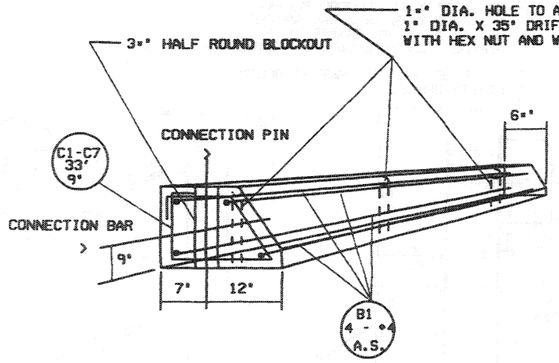

REBAR PLACEMENT
FOR PRECAST CONCRETE TAPERED CURB SECTION

REINFORCING STEEL SCHEDULE

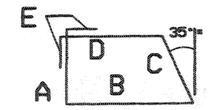

TYPE I
(FOR 1 SECTION ONLY)

BENT BARS
(ALL DIMENSIONS ARE OUT TO OUT)

MARK	SIZE	NO.	TYPE	LENGTH	A	B	C	D	E
C1	#3	1	1	4'2"	9"	14±"	11"	9"	3±"
C2				3'10"	8"	13±"	10"	8"	
C3				3'6±"	7"	12±"	9"	8"	
C4				3'2"	6"	11"	8"	7"	
C5				2'11"	5±"	10"	6±"	6"	
C6				2'6±"	4±"	8±"	5±"	5"	
C7	#3	1	1	2'4"	4±"	8"	5"	5"	3±"

NOTE: ALL REINFORCING BARS TO HAVE 1±" MINIMUM COVER.

STRAIGHT BARS

MARK	SIZE	NO.	LENGTH	
B1	#4	4	6'9"	
B2	#4	2	8"	

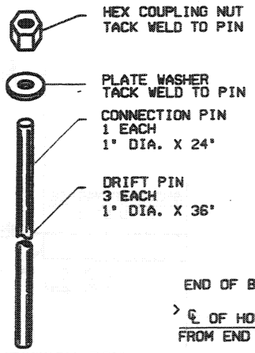

CONNECTION PIN & DRIFT PIN

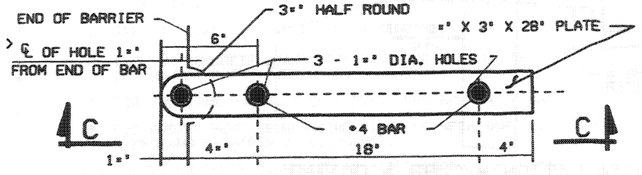

CONNECTION BAR

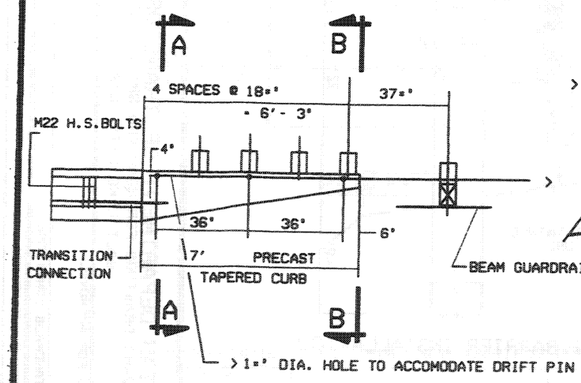

PLAN

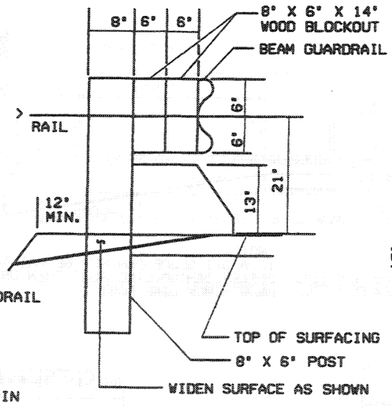

SECTION A-A

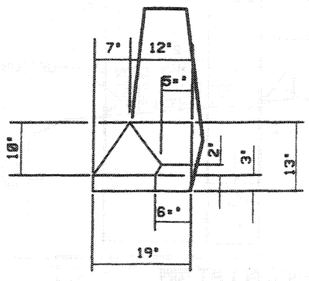

SECTION B-B

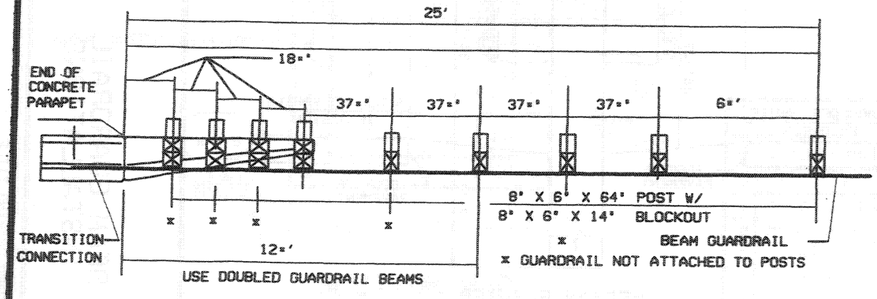

POST PLACEMENT

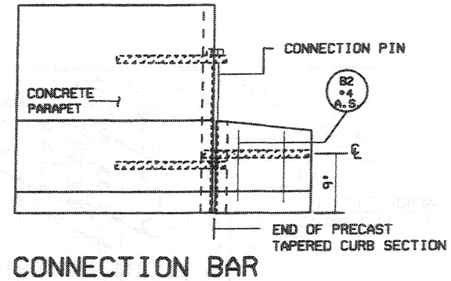

CONNECTION BAR PLACEMENT DETAIL

SECTION C-C

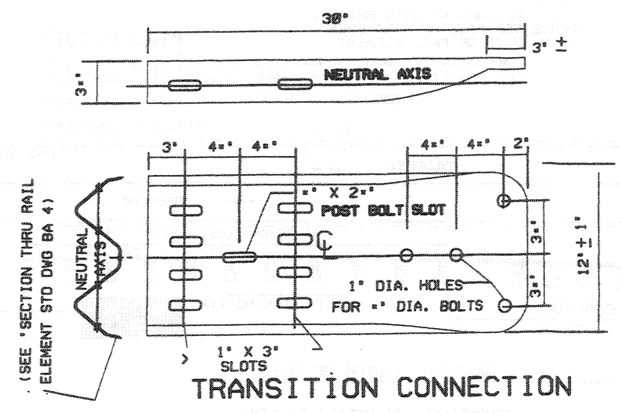

TRANSITION CONNECTION

REVISIONS

NO.	DATE	APPR.	REMARKS

UTAH DEPARTMENT OF TRANSPORTATION
STANDARD DRAWINGS FOR ROAD AND BRIDGE CONSTRUCTION
SALT LAKE CITY, UTAH

JULY 03, 2002
DATE

RECOMMENDED FOR APPROVAL

JULY 03, 2002
DATE

CHAIRMAN STANDARDS COMMITTEE APPROVED

DEPUTY DIRECTOR

GUARDRAIL TRANSITION

STANDARD DRAWING TITLE

STD DWG
BA 4A

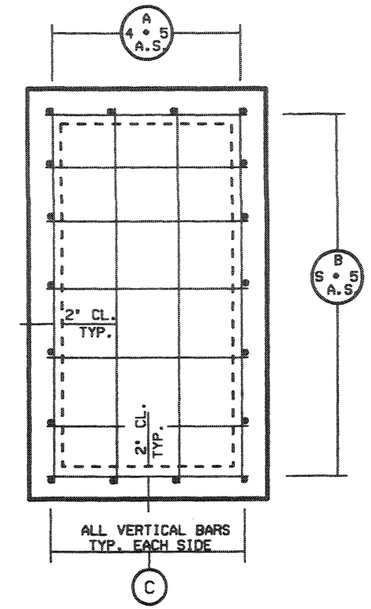

PLAN BOTTOM SLAB

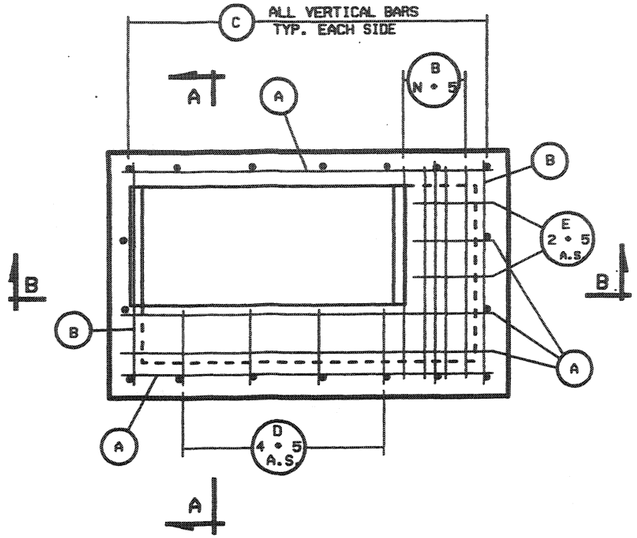

PLAN TOP SLAB

NOTES:

1. QUANTITIES SHOWN IN THE SCHEDULE OF INSTALLATION ARE FOR ONE UNIT ONLY.
2. FORM THE BOTTOM SLAB OF THE BOX TO FIT THE INVERT OF THE PIPE(S) WHEN SO REQUIRED ACCORDING TO THE DETAIL SHOWN ON THIS SHEET. SEE TABLE 3 ON STD DWG CB 10C FOR ADDITIONAL CONCRETE QUANTITIES.
3. DEDUCT CONCRETE DISPLACED BY PIPE(S) FROM THOSE CONCRETE QUANTITIES GIVEN IN SCHEDULE OF TABLE 1 ON STD DWG CB 10C.
4. WHEN FORMED INVERT IS REQUIRED, SEE TABLE 3 ON STD DWG CB 10C FOR ADDITIONAL CONCRETE QUANTITIES.
5. PROVIDE 2" CONCRETE COVER TO REINFORCING STEEL EXCEPT WHERE NOTED OTHERWISE.
6. UNLESS OTHERWISE SHOWN, ALL DIMENSIONS ARE OUT TO OUT OF BARS.
7. WEIGHT QUANTITIES FOR GRATE AND FRAME, AND SOLID COVER AND FRAME ARE SHOWN FOR INFORMATION ONLY.
8. SEE STD DWG CB 10A FOR DIMENSIONS.
9. PIPE DIAMETERS SHOWN IN TABLES AND SCHEDULE ARE INSIDE DIAMETERS.
10. MAXIMUM PIPE DIMENSIONS SHOWN IN SCHEDULE OF INSTALLATION ARE FOR PIPES PERPENDICULAR TO WALLS OF BOX. DETERMINE CLEARANCES FOR SKEWED PIPES.
11. SEE STD DWG GF 6 FOR MANHOLE STEP DETAILS.
12. USE #5 BARS FOR ALL REINFORCING @ 12" UNLESS OTHERWISE SHOWN.
13. WHEN SOLID COVER IS REQUIRED, ADD .023 CU.YDS. OF CONCRETE TO THOSE QUANTITIES GIVEN IN SCHEDULE OF INSTALLATION AND ADD 3" TO EACH D-BAR, AND 1.0 LB TO REINFORCING STEEL QUANTITIES.
14. USE COATED DEFORMED BILLET REINFORCING STEEL BARS CONFORMING TO AASHTO M 284, OR M 111 AND M 31 GRADE 60 RESPECTIVELY.
15. CHAMFER ALL EXPOSED CONCRETE CORNERS ¾" EXCEPT WHERE NOTED OTHERWISE.
16. USE CLASS AA(AE) CAST CONCRETE EXCEPT WHERE SPECIFIED OTHERWISE.

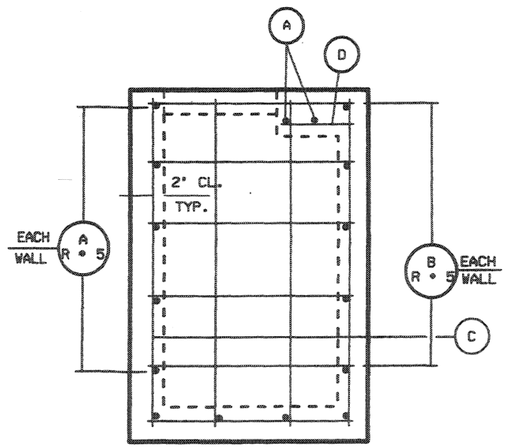

SECTION A-A

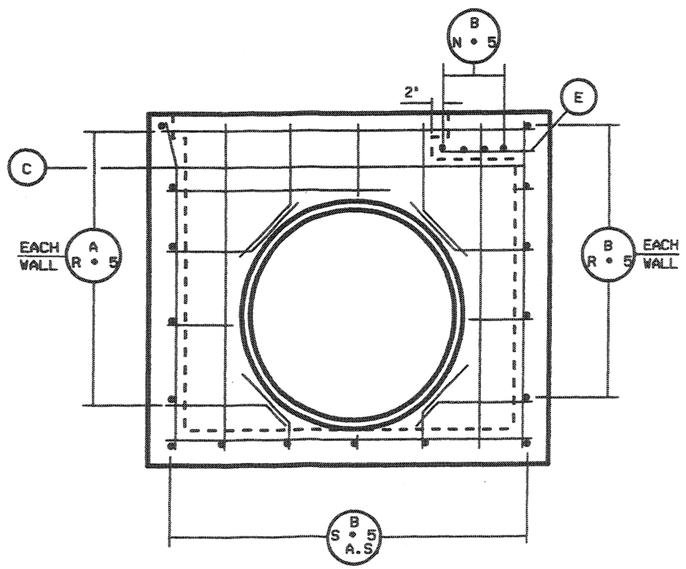

SECTION B-B

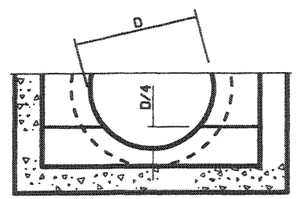

FORMED INVERT

REVISIONS				
NO.	DATE	APPR.	REMARKS	

UTAH DEPARTMENT OF TRANSPORTATION
STANDARD DRAWINGS FOR ROAD AND BRIDGE CONSTRUCTION
SALT LAKE CITY, UTAH

RECOMMENDED FOR APPROVAL — JULY 03,2002 DATE

CHAIRMAN STANDARDS COMMITTEE
APPROVED — JULY 03,2002 DATE

DEPUTY DIRECTOR

STANDARD CATCH BASIN AND CLEANOUT BOX SECTION DETAILS

STANDARD DRAWING TITLE

STD DWG
CB 10B

LINE	NO. OF MANHOLE STEPS	R	COLUMN "A" DIMENSIONS H	K	T	REINFORCING STEEL A LENGTH	A NO	B LENGTH	B NO	C NO.-10 LENGTH	D NO.-4 LENGTH	QUANTITIES CONC. CU.YD.	REINF STEEL LBS.	COLUMN "B" DIMENSIONS H	K	T	REINFORCING STEEL A LENGTH	A NO	B LENGTH	B NO	C NO.-10 LENGTH	D NO.-4 LENGTH	E NO.-2 LENGTH	QUANTITIES CONC. CU.YD.	REINF. STEEL LBS.	COLUMN "C" DIMENSIONS H	K	T	REINFORCING STEEL A LENGTH	A NO	B LENGTH	B NO	C NO.-10 LENGTH	D NO.-4 LENGTH	E NO.-2 LENGTH	QUANTITIES CONC. CU.YD.	REINF. STEEL LBS.	COLUMN "D" DIMENSIONS H	K	T	REINFORCING STEEL A LENGTH	A NO	B LENGTH	B NO	C NO.-25 LENGTH	D NO.-4 LENGTH	E NO.-25 LENGTH	QUANTITIES CONC. CU. YD.	REINF STEEL LBS.	LINE
1	--	4	3'-10	2'-6	6"	4'-8	14	3'-2	15	3'-6	1'-8	1.385	179	----	----	---	----	--	----	--	----	----	----	----	----	----	----	---	----	--	----	--	----	----	----	----	----	----	----	---	----	--	----	--	----	----	----	----	----	1
2	2	4	4'-4	3'-6			14		15	3'-11		1.584	187	----		---	----	--	----	--	----	----	----	----	----	----																										2
3	2	5	4'-10	3'-6			16		17	4'-5		1.642	212	----		---	----	--	----	--	----	----	----	----	----	----																										3
4	3	5	5'-4	4'-6			16		17	4'-11		1.781	228	----		---	----	--	----	--	----	----	----	----	----	----																										4
5	3	6	5'-10	4'-6			18		19	5'-5		1.929	245	----		---	----	--	----	--	----	----	----	----	----	----																										5
6	4	6	6'-4	5'-6			18		19	5'-11		2.059	253	6'-4	5'-6	6"	5'-8	18	3'-2	23	5'-11	1'-8	1'-6	2.417	301	----	----	---	----	--	----	--	----	----	----	----	----	----	----	----	----	----	----	----	----	----	----	----	----	----	6
7	4	7	6'-10	5'-6			20		21	6'-5		2.198	278	6'-10	5'-6			20		25	6'-5			2.576	321	6'-10	5'-6	6"	6'-2	20	3'-2	26	6'-5	1'-8	2'-6	2.763	343	----	----	---	----	--	----	--	----	----	----	----	----	----	----	----	----	----	----	----	----	----	----	----	7
8	5	7	7'-4	6'-6			20		21	6'-11		2.337	296	7'-4	6'-6			20		25	6'-11			2.732	338	7'-4	6'-6			20		26	6'-11			2.938	363	7'-4	6'-0	6"	6'-6	20	3'-2	26	6'-11	1'-8	2'-6	3.127	385	8
9	5	8	7'-10	6'-6			22		23	7'-5		2.478	311	7'-10	6'-6			22		27	7'-5			2.889	366	7'-10	6'-6			22		28	7'-5			3.096	382	7'-10	6'-6			22		30	7'-5			3.383	417	9
10	6	8	8'-4	7'-6			22		23	7'-11		2.615	319	8'-4	7'-6			22		27	7'-11			3.047	375	8'-4	7'-6			22		28	7'-11			3.263	391	8'-4	7'-0			22		30	7'-11			3.479	427	10
11	6	9	8'-10	7'-6			24		25	8'-5		2.784	344	8'-10	7'-6			24		29	8'-5			3.284	403	8'-10	7'-6			24		30	8'-5			3.438	422	8'-10	7'-6			24		32	8'-5			3.655	450	11
12	7	9	9'-4	8'-6			24		25	8'-11		2.892	352	9'-4	8'-6			24		29	8'-11			3.362	412	9'-4	8'-6			24		30	8'-11			3.596	429	9'-4	8'-0			24		32	8'-11			3.831	469	12
13	7	10	9'-10	8'-6			26		27	9'-5		3.031	377	9'-10	8'-6			26		31	9'-5			3.519	440	9'-10	8'-6			26		32	9'-5			3.763	458	9'-10	8'-6			26		34	9'-5			4.182	499	13
14	8	10	10'-4	9'-6			26		27	9'-11		3.179	395	10'-4	9'-6			26		31	9'-11			3.675	458	10'-4	9'-6			26		32	9'-11			3.938	467	10'-4	9'-6			26		34	9'-11			4.358	519	14
15	8	11	10'-10	9'-6			28		29	10'-5		3.389	418	10'-10	9'-6			28		33	10'-5			3.934	477	10'-10	9'-6			28		34	10'-5			4.096	496	10'-10	9'-6			28		36	10'-5			4.534	551	15
16	9	11	11'-4	10'-6			28		29	10'-11		3.448	419	11'-4	10'-6			28		33	10'-11			3.991	486	11'-4	10'-6			28		34	10'-11			4.263	586	11'-4	10'-6			28		36	10'-11			4.719	582	16
17	9	12	11'-10	10'-6			30		31	11'-5		3.567	443	11'-10	10'-6			30		35	11'-5			4.149	515	11'-10	10'-6			30		36	11'-5			4.439	535	11'-10	10'-6			30		38	11'-5			4.886	592	17
18	10	12	12'-4	11'-6	6"	4'-8	30	3'-2	31	11'-11	1'-8	3.726	451	12'-4	11'-6	6"	5'-6	30	3'-2	35	11'-11	1'-8	1'-6	4.385	524	12'-4	11'-6	6"	6'-2	30	3'-2	36	11'-11	1'-8	2'-6	4.596	544	12'-4	11'-6	6"	6'-8	30	3'-2	38	11'-11	1'-8	2'-6	4.886	592	18
19	10	13	12'-11	11'-6	7"	4'-10	32	3'-4	33	12'-6	1'-1	4.618	499	12'-11	11'-6	7"	5'-10	32	3'-4	37	12'-6	1'-1	1'-7	5.299	566	12'-11	11'-6	7"	6'-4	32	3'-4	38	12'-6	1'-1	2'-1	5.644	597	12'-11	11'-6	7"	6'-10	32	3'-4	40	12'-6	1'-1	2'-7	6.197	648	20
20	11	13	13'-6	12'-6			32		33	13'-0		4.775	498	13'-6	12'-6			32		37	13'-0			5.486	575	13'-6	12'-6			32		38	13'-0			5.842	596	13'-5	12'-6			32		40	13'-0			6.486	688	21
21	11	14	13'-11	12'-6			34		35	13'-7		4.941	523	13'-11	12'-6			34		39	13'-7			5.673	594	13'-11	12'-6			34		40	13'-7			6.048	628	13'-11	12'-6			34		42	13'-7			6.615	698	22
22	12	14	14'-5	13'-6			34		35	14'-2		5.187	531	14'-5	13'-6			34		39	14'-2			5.861	613	14'-5	13'-6			34		40	14'-2			6.238	635	14'-5	13'-6			34		42	14'-2			6.824	722	23
23	12	15	14-11	13'-6			36		37	14'-8		5.272	552	14'-11	13'-6			36		41	14'-8			6.048	642	14'-11	13'-6			36		42	14'-8			6.436	685	14'-11	13'-6			36		44	14'-8			7.832	733	24
24	13	15	15'-5	14'-6			36		37	15'-2		5.438	565	15'-5	14'-6			36		41	15'-2			6.235	651	15'-5	14'-6			36		42	15'-2			6.634	674	15'-5	14'-6			36		44	15'-2			7.241	764	25
25	13	16	15'-11	14'-6			38		39	15'-8		5.684	598	15'-11	14'-6			38		43	15'-8			6.422	688	15'-11	14'-6			38		44	15'-8			6.832	784	15'-11	14'-6			38		46	15'-8			7.458	775	26
26	14	16	16'-6	15'-6			38		39	16'-2		5.769	599	16'-5	15'-6			38		43	16'-2			6.609	689	16'-5	15'-6			38		44	16'-2			7.038	713	16'-5	15'-6			38		46	16'-2			7.659	886	27
27	14	17	16-11	15'-6			40		41	16'-8		5.935	624	16'-11	15'-6			40		45	16'-8			6.797	637	16'-11	15'-6			40		46	16'-8			7.228	743	16'-11	15'-6			40		48	16'-8			7.868	817	28
28	15	17	17'-5	16'-6			40		41	17'-2		6.188	632	17'-5	16'-6			40		45	17'-2			6.984	727	17'-5	16'-6			40		46	17'-2			7.426	752	17'-5	16'-6			40		48	17'-2			8.076	848	29
29	15	18	17'-11	16'-6			42		43	17'-8		6.266	658	17'-11	16'-6			42		47	17'-8			7.171	755	17'-11	16'-6			42		48	17'-8			7.624	782	17'-11	16'-6			42		50	17'-8			8.295	859	30
30	16	18	18'-6	17'-6			42		43	18'-2		6.432	666	18'-5	17'-6			42		47	18'-2			7.359	765	18'-5	17'-6			42		48	18'-2			7.822	791	18'-5	17'-6			42		50	18'-2			8.494	898	31
31	16	19	18'-11	17'-6			44		45	18'-8		6.597	692	18'-11	17'-6			44		49	18'-8			7.545	793	18'-11	17'-6			44		50	18'-8			8.020	821	18'-11	17'-6			44		52	18'-8			8.783	981	32
32	17	19	19'-6	18'-6			44		45	19'-2		6.763	709	19'-5	18'-6			44		49	19'-2			7.733	803	19'-5	18'-6			44		50	19'-2			8.215	838	19'-5	18'-6			44		52	19'-2			8.912	932	33
33	17	20	19'-11	18'-6			46		47	19'-8		6.929	725	19'-11	18'-6			46		51	19'-8			7.928	831	19'-11	18'-6			46		52	19'-8			8.416	868	19'-11	18'-6			46		54	20'-0			9.129	948	34
34	18	20	20'-5	19'-6			46		47	20'-0		7.094	734	20'-5	19'-6			46		51	20'-0			8.187	841	20'-5	19'-6			46		52	20'-0			8.615	869	20'-5	19'-6			46		54	20'-0			9.329	975	35
35	18	21	20'-11	19'-6			48		49	20'-6		7.268	759	20'-11	19'-6			48		53	20'-6			8.294	869	20'-11	19'-6			48		54	20'-6			8.812	899	20'-11	19'-6			48		56	20'-6			9.538	985	36
36	19	21	21'-6	20'-6			48		49	21'-0		7.426	767	21'-5	20'-6			48		53	21'-0			9.481	978	21'-5	20'-6			48		54	21'-0			9.811	988	21'-5	20'-6			48		56	21'-0			9.747	1017	37
37	19	22	21'-11	20'-6			50		51	21'-7		7.591	793	21'-11	20'-6			50		55	21'-7			8.669	987	21'-11	20'-6			50		56	21'-7			9.209	937	21'-11	20'-6			50		58	21'-7			9.965	1027	38
38	20	22	22'-5	21'-6	7"	4'-10	50	3'-4	51	22'-0	1'-1	7.757	991	22'-5	21'-6	7"	5'-10	50	3'-4	55	22'-8	1'-1	1'-7	8.856	916	22'-5	21'-6	7"	6'-4	50	3'-4	56	22'-8	1'-1	2'-1	9.407	946	22'-5	21'-6	7"	6'-10	50	3'-4	58	22'-8	1'-1	2'-8	11.889	1068	39
39	20	23	23'-6	21'-6	8"	5'-0	52	3'-6	53	22'-7	1'-2	9.259	846	23'-6	21'-6	8"	6'-0	52	3'-6	57	22'-7	1'-2	1'-6	10.533	966	23'-6	21'-6	8"	6'-6	52	3'-6	58	22'-7	1'-2	2'-2	11.17	998	23'-6	21'-6	8"	7'-0	52	3'-6	60	22'-7	1'-2	2'-9	12.851	1891	40
40	21	23	23'-6	22'-6			52		53	23'-1		9.452	855	23'-6	22'-6			52		57	23'-1			10.752	975	23'-6	22'-6			52		58	23'-1			11.48	1007	23'-6	22'-6			52		60	23'-1			12.294	1123	41
41	21	24	24'-6	22'-6			54		55	23'-7		9.646	981	24'-6	22'-6			54		59	23'-7			10.978	1894	24'-6	22'-6			54		60	23'-7			11.632	1037	24'-6	22'-6			54		62	24'-1			12.536	1134	42
42	22	24	24'-6	23'-6			54		55	24'-1		9.839	889	24'-6	23'-6			54		59	24'-1			11.186	1814	24'-6	23'-6			54		60	24'-1			11.862	1847	24'-6	23'-6			54		62	24'-7			12.779	1166	43
43	22	25	25'-6	23'-6			56		57	24'-7		10.032	915	25'-6	23'-6			56		61	24'-7			11.486	1843	25'-6	23'-6			56		62	24'-7			12.093	1877	25'-6	23'-6			56		64	25'-1			13.022	1176	44
44	23	25	25'-6	24'-6			56		57	25'-1		10.226	924	25'-6	24'-6			56		61	25'-1			11.821	1852	25'-6	24'-6			56		62	25'-1			12.323	1886	25'-6	24'-6			56		66	25'-7			13.265	1208	45
45	23	26	26'-6	24'-6			58		59	25'-7		10.419	938	26'-6	24'-6			58		63	25'-7			11.842	1882	26'-6	24'-6			58		64	26'-1			12.784	1111	26'-6	24'-6			58		68	26'-7			13.588	1219	46
46	24	26	26'-6	25'-6			58		59	26'-1		10.613	959	26'-6	25'-6			58		63	26'-1			12.068	1891	26'-6	25'-6			58		64	26'-7			13.815	1156	27'-6	25'-6			58		68	27'-1			13.758	1251	47
47	24	27	27'-6	25'-6			60		61	26'-7		10.886	984	27'-6	25'-6			60		65	26'-7			12.278	1126	27'-6	25'-6			60		66	27'-1			13.245	1166	27'-6	25'-6			60		68	27'-1			13.993	1282	48
48	25	27	27'-6	26'-6			60		61	27'-1		11.088	992	27'-6	26'-6			60		65	27'-1			12.496	1136	27'-6	26'-6			60		66	27'-7			13.476	1196	28'-6	26'-6			60		68	27'-7			14.236	1294	49
49	25	28	28'-6	26'-6			62		63	27'-7		11.193	1016	28'-6	26'-6			62		67	27'-7			12.714	1151	28'-6	26'-6			62		68	27'-7			13.786	1205	28'-6	27'-6			62		68	28'-1			14.479	1384	50
50	26	28	28'-6	27'-6			62		63	28'-1		11.386	1027	28'-6	27'-6			62		67	28'-1			12.933	1166	28'-6	27'-6			62		68	28'-1			13.937	1236	29'-5	27'-6			62		68	28'-7			14.722	1337	51
51	26	29	29'-6	27'-6			64		65	28'-7		11.598	1853	29'-6	27'-6			64		69	28'-7			13.15	1197	29'-6	27'-6			64		68	28'-7			14.167	1245	29'-6	28'-6			64		72	29'-1			14.984	1347	52
52	27	29	29'-6	28'-6			64		65	29'-1		11.773	1855	29'-6	28'-6			64		69	29'-1			13.369	1207	29'-6	28'-6			64		68	29'-1			14.376	1276	30'-6	28'-6			64		72	29'-7			15.297	1388	53
53	27	30	30'-6	28'-6			66		67	29'-7		11.967	1887	30'-6	28'-6			66		71	29'-7			13.587	1236	30'-6	28'-6			66		72	29'-7			14.626	1265	30'-6	29'-6	8"	7'-8	66	3'-6	74	30'-1	1'-2	2'-8	15.458	1398	54
54	28	30	30'-6	29'-6	8"	5'-8	66	3'-6	67	30'-1	1'-2	12.168	1898	30'-6	29'-6	8"	6'-8	66	3'-6	71	30'-1	1'-2	1'-8	13.865	1245	30'-6	29'-6	8"	6'-6	66	3'-6	72	30'-1	1'-2	2'-2	14.626	1265	30'-6	29'-6	8"	7'-8	66	3'-6	74	30'-1	1'-2	2'-8	15.458	1398	54
			N-1	S-6	W-4'-0	M-0'-4								N-4	S-7	W-5'-0	M-1'-4								N-5	S-7	W-5'-5	M-1'-10								N-6	S-8	W-6'-0	M-2'-4								

TABLE 1 : CONCRETE DISPLACED BY PIPES:

PIPE SIZES R.C.P	C.M.P	6" CU. YD	7" CU. YD	8" CU. YD
42"	48"	0.233	0.271	0.310
48"	60"	0.348	0.396	0.453
54"	66"	0.427	0.498	0.569
60"	72"	0.524	0.611	0.698
	54"	0.295	0.344	0.393

TABLE 2 : MAXIMUM PIPE SIZE TO BE USED:

	R.C.P	C.M.P
COLUMN A	42"	48"
COLUMN B	48"	60"
COLUMN C	54"	66"
COLUMN D	60"	72"

TABLE 3 : CONCRETE NEEDED FOR FORMED INVERT:

PIPES SIZES	R.C.P CU. YD	C.M.P. CU. YD
42"	0.273	----
48"	0.428	0.143
54"	----	----
60"	0.617	0.223
66"	----	0.278
72"	----	0.322

STRUCTURAL STEEL :

RECTANGULAR GRATE & FRAME - 340 LBS
BICYCLE - SAFE GRATE & FRAME - 365 LBS.
SOLID COVER & FRAME - 474 LBS.

REVISIONS

NO.	DATE	APPR.	REMARKS

UTAH DEPARTMENT OF TRANSPORTATION
STANDARD DRAWINGS FOR ROAD AND BRIDGE CONSTRUCTION
SALT LAKE CITY, UTAH

RECOMMENDED FOR APPROVAL — JULY 03,2002 DATE
CHAIRMAN STANDARDS COMMITTEE APPROVED — JULY 03,2002 DATE
DEPUTY DIRECTOR

STANDARD CATCH BASIN AND CLEANOUT BOX SCHEDULE OF INSTALLATION 42" TO 60" RCP 48" TO 72" CMP
STANDARD DRAWING TITLE

STD DWG
CB 10C

CRASH CUSHIONS

TYPE A, B & D

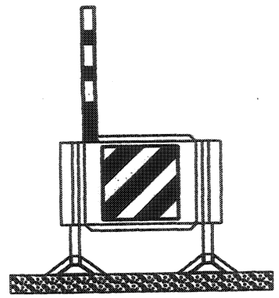

OBJECT MARKER PLATE OR SHEETING: ATTACH TO THE TOP FRONT AND SIDE OF UNIT NEAREST THE APPROACH LANE OF TRAFFIC. IN A GORE AREA CENTER OBJECT MARKER.

* APPROVED SYSTEM TYPE D, REACT-350 HAS AN OBJECT MARKER SUPPLIED WITH THE SYSTEM, MARKER POST IS NOT REQUIRED.

TYPE E

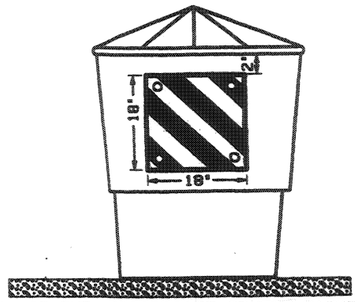

PLACE THE APPROPRIATE OBJECT MARKER PANEL OR SHEETING 2 INCHES FROM THE TOP OF THE LEAD BARREL OF THE ARRAY.

MARKER POST NOT REQUIRED.

MARKER PLATE

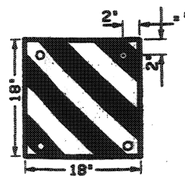

USE A 0.032 GAUGE ALUMINUM MARKER PLATE WITH APPROPRIATE MARKER SHEETING

USE FOUR 1 INCH X ¼ INCH ZINC PLATED BOLTS WITH WASHERS AND NUTS TO MOUNT PLATE.

SELF ADHESIVE SHEETING WITH APPROPRIATE OBJECT MARKER DESIGNATION CAN BE USED AS A SUBSTITUTE.

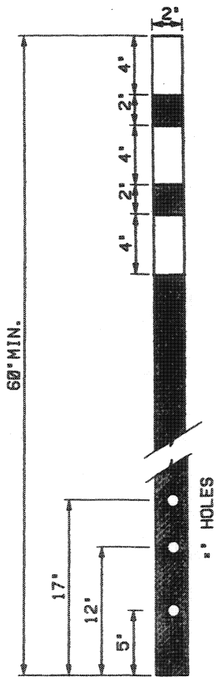

MARKER POST

PLACE YELLOW BANDS OF REFLECTIVE SHEETING AS SPECIFIED BY STANDARD SPECIFICATION, SECTION 02891, PART 2 AT THE TOP OF THE POST WITH A 2 INCH SPACE BETWEEN THE 1ST AND 2ND BAND AND THE 2ND AND 3RD BAND. DRILL THREE MOUNTING HOLES, ¼ INCH IN DIAMETER, MEASURED FROM THE BOTTOM UP 5 INCHES, 12 INCHES AND 17 INCHES.

MARKER POST MOUNTING

MOUNT MARKER POST 48 INCHES FROM THE BOTTOM OF THE THIRD YELLOW BAND TO GROUND LEVEL. DO NOT COLLAPSE MARKER POST WHEN SECURING TO SYSTEM.

WOOD POST: PLACE MARKER POST ON THE FRONT OF THE FIRST POST OF SYSTEM AND SECURE WITH THREE ¼ X 4 INCH ZINC PLATED LAG BOLTS AND WASHERS.

METAL POST: PLACE MARKER POST ON THE FRONT OF THE FIRST POST OF SYSTEM AND SECURE WITH THREE ¼ X 3 INCH ZINC PLATED BOLTS WITH NUTS AND WASHERS.

PLASTIC NOSE PIECES: PLACE MARKER POST 12 INCHES FORWARD FROM THE BACK EDGE OF THE NOSE PIECE AND SECURE WITH THREE ¼ X 3 INCH ZINC PLATED BOLTS WITH WASHERS.

NOTE: 1

USE MARKER POST UNLESS OTHERWISE SPECIFIED. USE IS OPTIONAL WHEN SNOW ACCUMULATION IS NOT A CONCERN.

NOTE: 2

SHEETING TO COMPLY WITH UDOT STANDARD SPECIFICATION 02842 FOR FLEXIBLE SHEETING.

MARKER POST

TYPE A, B & D

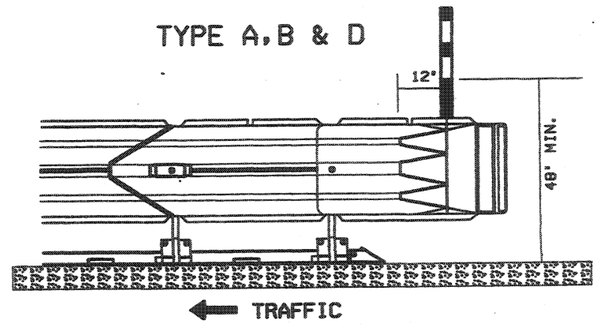

MARKER POST:

MOUNT ON THE SIDE OF THE APPROACH TRAFFIC, 12 INCHES FROM THE BACK EDGE OF PLASTIC NOSE PIECE. IN GORE AREAS MOUNT ON BOTH SIDES.

CRASH CUSHION TYPE F.

THIS SYSTEM HAS A BELTED OR PLASTIC NOSE PIECE AND STEEL POSTS. OBJECT MARKER MOUNTING SIMILAR TO TYPE H AND MARKER POST IS MOUNTED ON THE NOSE PIECE SIMILAR TO TYPE B.

TYPE H

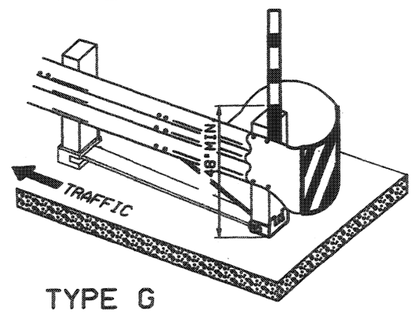

TYPE C

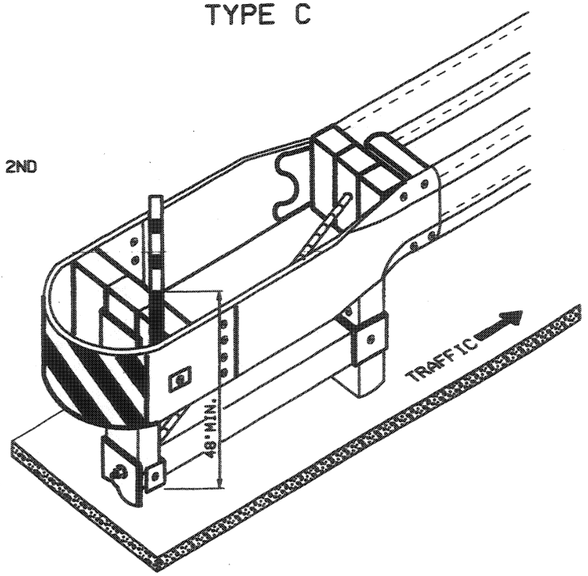

OBJECT MARKER PLATE OR SHEETING: ATTACH TO THE FRONT OF SYSTEM TOP, AND OFFSET 6 INCHES FROM CENTER TOWARD THE APPROACH LANE OF TRAFFIC.

TYPE G

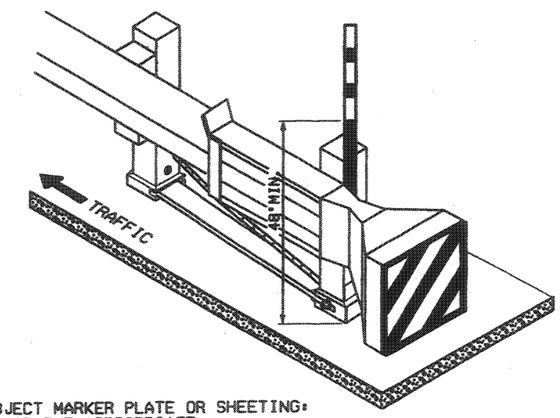

OBJECT MARKER PLATE OR SHEETING: PLACE THE APPROPRIATE OBJECT MARKER PANEL TO THE FRONT OF THE SYSTEMS.

REVISIONS

NO.	DATE	APPR	REMARKS

UTAH DEPARTMENT OF TRANSPORTATION
STANDARD DRAWINGS FOR ROAD AND BRIDGE CONSTRUCTION
SALT LAKE CITY, UTAH

RECOMMENDED FOR APPROVAL — JULY 03,2002 DATE

CHAIRMAN STANDARDS COMMITTEE APPROVED — JULY 03,2002 DATE

DEPUTY DIRECTOR

CRASH CUSHION MARKINGS

STANDARD DRAWING TITLE

STD DWG
CC 1

CRASH CUSHION CONNECTION

NOTE:
REFER TO MANUFACTURER'S SPECIFICATIONS FOR CERTIFICATION REQUIREMENTS.

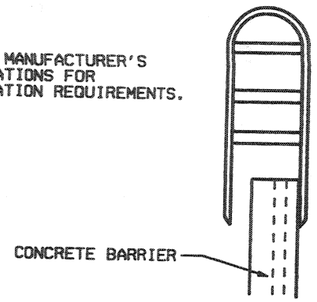

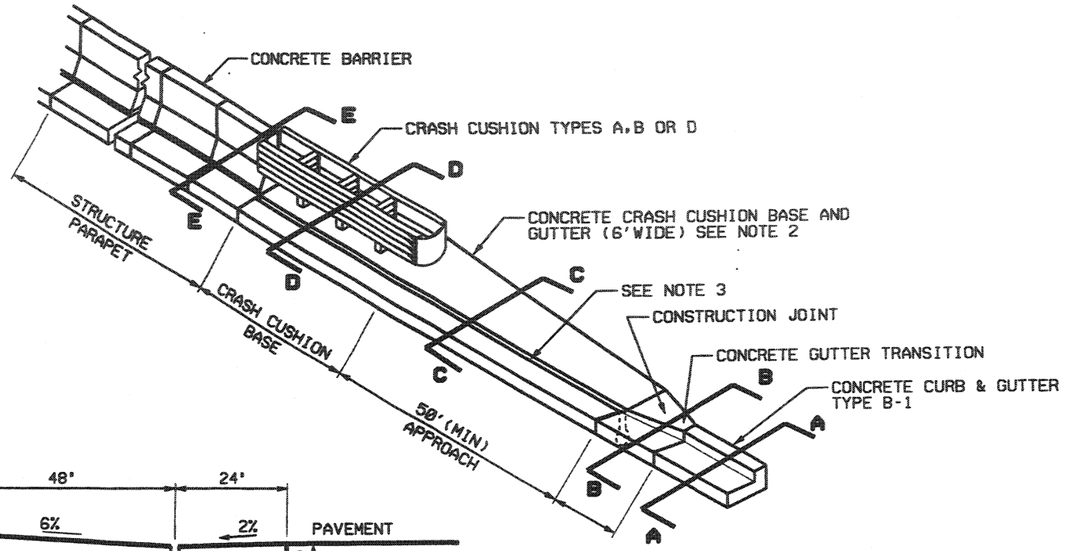

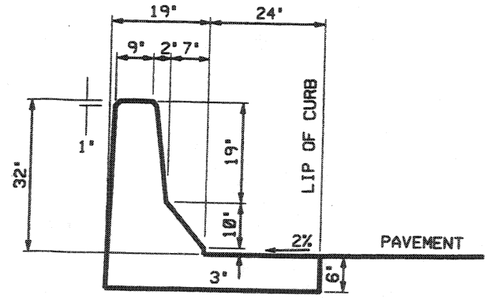

SECTION E-E

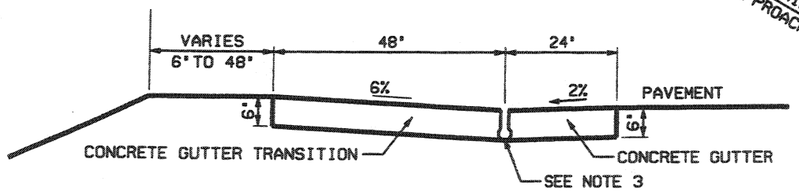

SECTION C-C

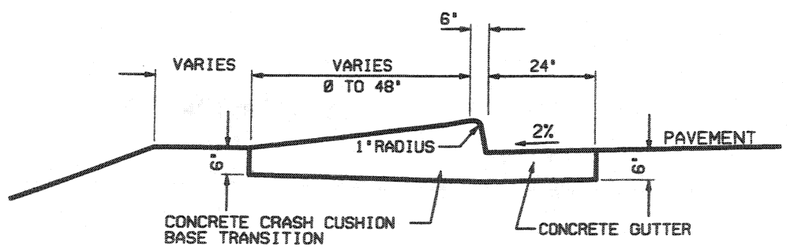

SECTION B-B

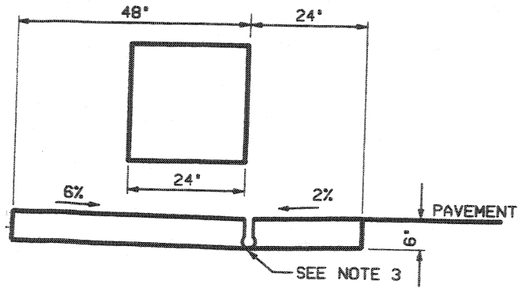

SECTION D-D

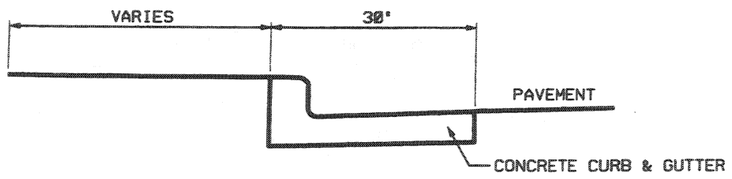

SECTION A-A

NOTES:

1. ALTERNATIVE INSTALLATION TO GUIDELINES A PLAN 2A STD DWG CC 2, FOR CRASH CUSHION TYPES A, B & D.
2. DESIGN A DRAINAGE SYSTEM THAT DOES NOT CREATE A RAISED CURB IN FRONT OF OR TO THE SIDES OF THE CRUSH CUSHION SYSTEM WHEN PARALLEL ROAD SYSTEM IS 1% OR GREATER. A SLOTTED DRAINAGE SYSTEM IS AN OPTION.
3. CAST, IN A MONOLITHIC POUR, CRASH CUSHION BASE AND GUTTER FROM REAR OF SYSTEM TO THE APPROACH TRANSITION WITH CURB AND GUTTER.

REVISIONS

NO.	DATE	APPR.	REMARKS

UTAH DEPARTMENT OF TRANSPORTATION
STANDARD DRAWINGS FOR ROAD AND BRIDGE CONSTRUCTION
SALT LAKE CITY, UTAH

RECOMMENDED FOR APPROVAL — JULY 03, 2002 DATE

CHAIRMAN STANDARDS COMMITTEE APPROVED — JULY 03, 2002 DATE

DEPUTY DIRECTOR

CRASH CUSHION DRAINAGE DETAILS GUIDELINE B

STANDARD DRAWING TITLE

STD DWG
CC 3

SHOULDER APPLICATION

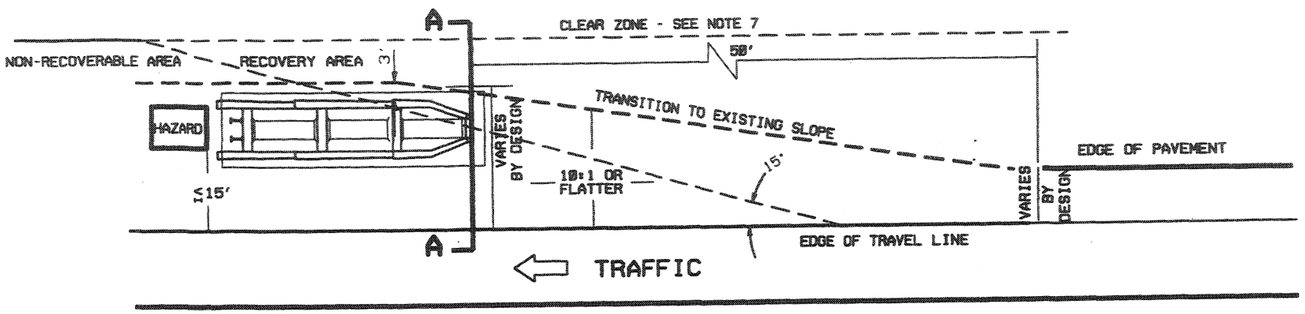

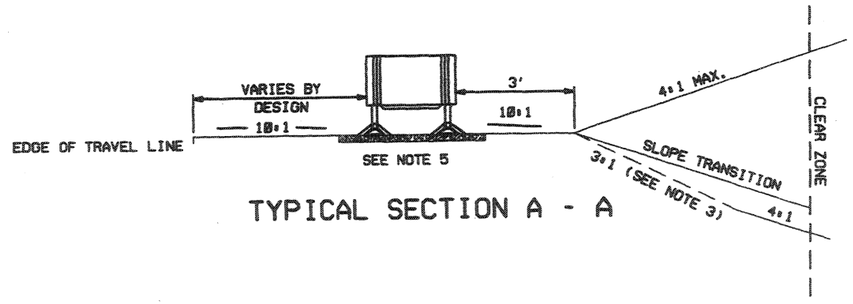

TYPICAL SECTION A - A

GORE APPLICATION AREA

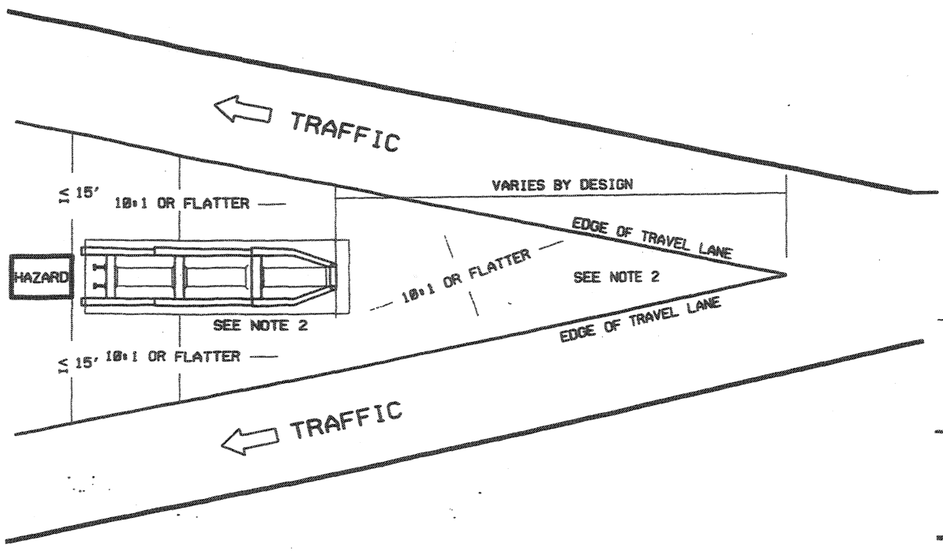

MEDIAN APPLICATION

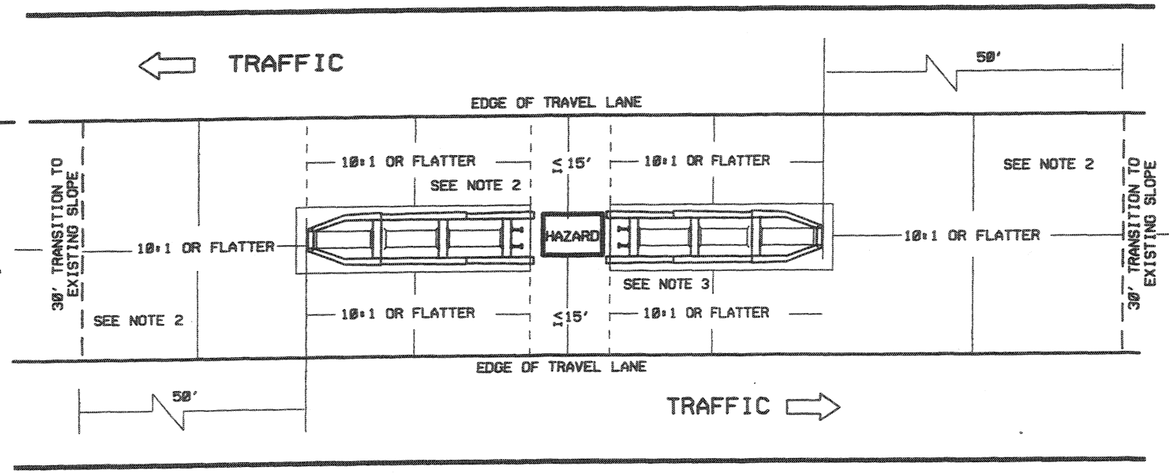

NOTES:

1. CRASH CUSHION TYPE A: QUADGUARD, MANUFACTURED BY ENERGY ABSORPTION SYSTEMS, TO PROTECT HAZARDS FROM 37 INCHES TO 90 INCHES.

   CRASH CUSHION TYPE B: QUADGUARD, MANUFACTURED BY ENERGY ABSORPTION SYSTEMS, TO PROTECT HAZARDS UP TO 36 INCHES.

   CRASH CUSHION TYPE D: QUADGUARD ELITE AND QUADGUARD LMC, MANUFACTURED BY ENERGY ABSORPTION SYSTEMS, AND REACT 350, MANUFACTURED BY ROADWAY SAFETY SERVICES.
   TYPE D SYSTEMS PROTECT HAZARDS UP TO 90 INCHES IN WIDTH. TYPE D SYSTEMS ARE USED WHERE ONE OR MORE IMPACTS PER YEAR ARE ANTICIPATED, OR WHEN REPAIR HISTORY INDICATES TWO OR MORE IMPACTS OVER A THREE YEAR PERIOD.

2. ALL APPLICATIONS REQUIRE THE USE OF A 10:1 SLOPE OR FLATTER TO THE FRONT AND SIDE APPROACHES. USE A 10:2 OR FLATTER SLOPE AT THE REAR OF THE SYSTEM WHEN TRAFFIC ALSO APPROACHES FROM THE REAR OF THE SYSTEM.

3. USE A 4:1 OR FLATTER FILL SLOPE AND A RECOVERY AREA IF IMPRACTICAL, USE A MAXIMUM 3:1 FILL SLOPE AND A RECOVERY AREA ESTABLISHED AT THE TOE OF 3:1 FILL SLOPE. WHEN USED WITH A CUT SLOPE, A 4:1 OR FLATTER CUT IS REQUIRED IN THE RECOVERY AREA.

4. USE A TRANSITION ELEMENT, AS PER MANUFACTURE'S SPECIFICATIONS, WHEN TRAFFIC APPROACHES THE REAR OF SYSTEM.

5. USE MANUFACTURE'S SPECIFICATIONS FOR PAD AND BACKUP REQUIREMENTS.

6. INSTALL PROPER MARKINGS AS PER STD DWG CC 1.

7. MAINTAIN AASHTO CLEAR ZONE REQUIREMENTS.

REVISIONS

NO.	DATE	APPR.	REMARKS

UTAH DEPARTMENT OF TRANSPORTATION
STANDARD DRAWINGS FOR ROAD AND BRIDGE CONSTRUCTION
SALT LAKE CITY, UTAH

RECOMMENDED FOR APPROVAL — JULY 03, 2002 DATE

CHAIRMAN STANDARDS COMMITTEE APPROVED — JULY 03, 2002 DATE

DEPUTY DIRECTOR

STANDARD DRAWING TITLE

DETAIL FOR PLACEMENT CRASH CUSHIONS TYPE A, B & D

STD DWG
CC 4

CRASH CUSHION TYPE F

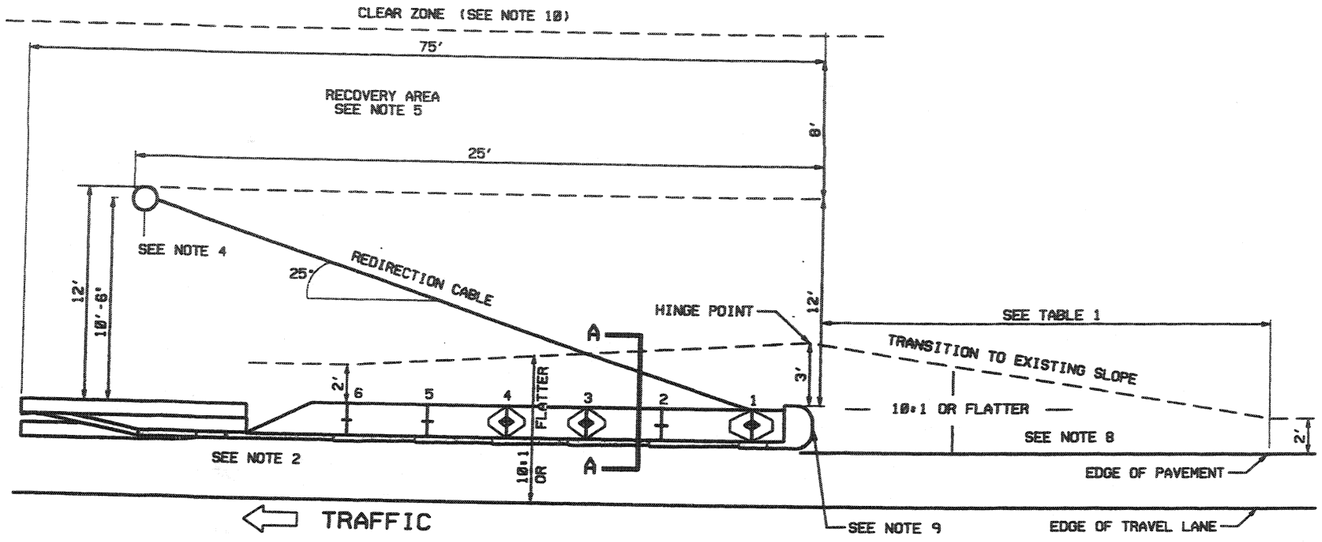

TABLE 1

SPEED MPH	TAPER	MINIMUM LENGTH FEET
LESS THAN 40	7:1	70
40 TO 55	10:1	100
60 TO 75	15:1	150

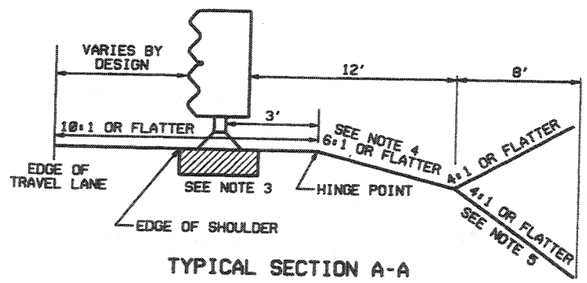

TYPICAL SECTION A-A

NOTES FOR CRASH CUSHION TYPE F

1. THE QUADTREND-350 IS MANUFACTURED BY ENERGY ABSORPTION SYSTEMS. USE MANUFACTURER'S AND UDOT'S REQUIREMENTS WHEN INSTALLING SYSTEM.
2. USE THE QUADTREND-350 WHEN A DIRECT ATTACHMENT TO A CONCRETE BARRIER OR BRIDGE PARAPET IS REQUIRED AND THERE IS LESS THAN 125 FEET OF LONGITUDINAL SPACE IN FRONT OF THE HAZARD.
3. INSTALL CONCRETE PAD AS PER MANUFACTURER'S REQUIREMENTS.
4. PLACE CABLE ANCHOR FOUNDATION IN SUCH A MANNER THAT THE REDIRECTING CABLE LAYS 6:1 OR FLATTER ON TOP OF THE GROUND, AND THE FOUNDATION WITH THE CABLE ANCHOR BRACKET, WHEN ATTACHED TO FOUNDATION, DOES NOT EXCEED 4 INCHES ABOVE GROUND LEVEL. DO NOT BURY THE REDIRECTION CABLE. REFERENCE STD DWG SN 6, BREAKAWAY POST STUB DETAIL.
5. USE A 4:1 OR FLATTER SLOPE IN RECOVERY AREA. WHEN USED WITH A CUT SLOPE A 6:1 OR FLATTER FILL AREA 12 FT. X 25 FT. IS REQUIRED PRIOR TO THE CUT SLOPE. INCLUDE THIS AREA AS PART OF THE RECOVERY AREA.
6. CLEAR THE RECOVERY AND APPROACH AREAS OF ANY FIXED OBJECTS.
7. ATTACH SAND CONTAINERS AT POSTS 1, 3 AND 4.
8. COMPLETE ALL GRADING REQUIREMENTS PRIOR TO SYSTEM INSTALLATION.
9. INSTALL REQUIRED MARKING AS PER STD DWG CC 1.
10. MAINTAIN AASHTO CLEAR ZONE FOR SPEEDS GREATER THAN 40 MPH. DEPENDING ON SYSTEM OFFSET, CLEAR ZONE MAY EXTEND OUTSIDE OF THE RECOVERY AREA.

REVISIONS

NO.	DATE	APPR.	REMARKS
1	10/16/02	F.M.	CRASH CUSHION TYPE G - CORRECTED STD DWG CALLOUT FROM BA 2B TO BA 4A IN NOTE 6.
2	04/03/03	G.S.	REVISED CLEAR ZONE REQUIREMENT, ADDED TABLE 1, ADDED NOTE 7.

UTAH DEPARTMENT OF TRANSPORTATION
STANDARD DRAWINGS FOR ROAD AND BRIDGE CONSTRUCTION
SALT LAKE CITY, UTAH

RECOMMENDED FOR APPROVAL — APR.24.2003 DATE

CHAIRMAN, STANDARDS COMMITTEE APPROVED — APR.24.2003 DATE

DEPUTY DIRECTOR

GRADING & INSTALLATION DETAILS
CRASH CUSHION TYPE F

STANDARD DRAWING TITLE

STD DWG
CC 7

DGN FILE: S:\ESD\STANDARD_DRAWINGS\IMPERIAL\APPROVED\CRASH CUSHIONS (CC)\CC07.DGN
15-OCT-2003

CORRUGATED STEEL PIPE ARCHES
2 2/3" X ½" CORRUGATIONS

PIPE DIM. SPAN X RISE INCH	CORNER RADIUS INCH	MIN. COVER FT.	MIN. THICKNESS INCH	MAX. FILL HEIGHT FT.
17 X 13	3	18	0.064	11
21 X 15	3	18	0.064	9
24 X 18	3	24	0.064	7
28 X 20	3	24	0.064	5
35 X 24	4	30	0.064	6
42 X 29	4½	30	0.064	5
49 X 33	5½	30	0.079	5
57 X 38	6½	30	0.109	6
64 X 43	7	30	0.109	5
71 X 47	8	24	0.138	5
77 X 52	8½	24	0.168	5
83 X 57	9	24	0.168	5

SEE NOTE 1

CORRUGATED STEEL PIPE ARCHES
6" X 2" CORRUGATIONS
BOLTED FABRICATION 4 BOLTS/FT ½" DIA.

PIPE DIM. SPAN X RISE FT-INCH	CORNER RADIUS INCH	MIN. COVER FT.	MIN. THICKNESS INCH	MAX. FILL HEIGHT FT.
6-1 X 4-7	18	18	0.109	16
7-0 X 5-1	18	18	0.109	14
7-11 X 5-7	18	18	0.109	12
8-10 X 6-1	18	24	0.109	11
9-9 X 6-7	18	24	0.109	10
10-11 X 7-1	18	24	0.109	8
11-10 X 7-7	18	24	0.109	7
12-10 X 7-7	18	24	0.109	6
14-1 X 8-4	18	30	0.109	5
15-4 X 9-3	21	24	0.138	6
15-10 X 9-10	21	24	0.138	5
16-7 X 10-9	21	24	0.138	4
13-3 X 9-4	31	24	0.109	12
14-3 X 9-10	31	24	0.109	11
15-4 X 10-4	31	24	0.138	10
16-3 X 10-10	31	24	0.138	9
17-2 X 11-4	31	30	0.138	9
18-1 X 11-10	31	30	0.168	8
19-3 X 12-4	31	30	0.168	7
19-11 X 12-10	31	30	0.168	7
20-7 X 13-10	31	36	0.188	7

ROUND CORRUGATED STEEL PIPE
3" X 1" CORRUGATIONS

THICKNESS	0.064		0.079		0.109		0.138		0.168	
PIPE DIAMETER INCH	MIN. COVER INCH	MAX. FILL FT.	MIN. COVER INCH	MAX. FILL FT.	MIN. COVER INCH	MAX. FILL FT.	MIN. COVER INCH	MAX. FILL FT.	MIN. COVER INCH	MAX. FILL FT.
36	12	81	12	102	12	143	12	184	12	225
42	12	70	12	87	12	122	12	157	12	193
48	12	61	12	76	12	107	12	138	12	169
54	12	54	12	68	12	95	12	122	12	150
60	12	49	12	61	12	85	12	110	12	135
66	13	44	12	55	12	78	12	100	12	122
72	15	40	13	51	12	71	12	92	12	112
78	16	37	14	47	12	66	12	85	12	104
84	17	35	15	43	13	61	12	78	12	96
90	18	32	16	40	14	57	12	73	12	90
96			17	38	15	53	13	69	12	84
102			18	36	15	50	14	65	13	79
108					16	47	14	61	14	75
114					17	45	15	58	15	71
120					18	42	16	55	15	67
126							17	52	16	64
132							17	50	17	61
138							18	48	18	58
144									18	56

SEE NOTE 1

ROUND CORRUGATED STEEL STRUCTURAL PLATE PIPE
6" X 2" CORRUGATIONS
BOLTED FABRICATION 4 BOLTS/FT ½" DIA. THICKNESS

THICKNESS	0.109	0.138	0.168	0.186	0.218	0.249	0.280
PIPE DIAMETER INCH	MIN. COVER INCH	MAX. FILL FT.	MAX. FILL FT.	MAX. FILL FT.	MAX. FILL FT.	MAX. FILL FT.	MAX. FILL FT.
60	12	46	68	90	103	124	146	169
66	12	42	62	81	93	113	133	145
72	12	38	57	75	86	103	122	135
78	12	35	52	69	79	95	112	123
84	12	33	49	64	73	88	104	114
90	12	31	45	60	68	82	97	106
96	12	29	43	56	64	77	91	100
102	13	27	40	52	60	73	86	94
108	14	25	38	50	57	69	81	88
114	15	24	36	47	54	65	77	84
120	15	23	34	45	51	62	73	80
126	16	22	32	42	49	59	69	76
132	17	21	31	40	46	56	66	72
138	18	20	29	39	44	54	63	69
144	18	19	28	37	43	51	61	66
150	19	18	27	36	41	49	58	64
156	20	17	26	34	39	47	56	61
162	21	17	25	33	38	46	54	59
168	21	16	24	32	36	44	52	57
174	22	16	23	31	35	42	50	55
180	23	15	22	30	34	41	48	53
186	24	15	22	29	33	40	47	51
192	24		21	28	32	38	45	50
198	25		20	27	31	37	44	48
204	26		20	26	30	36	43	47
210	27		19	25	29	35	42	45
216	27			25	28	34	41	44
222	28			24	27	33	40	43
228	29			23	27	32	39	42
234	30			23	26	31	38	41
240	30				25	31	37	40
246	31				25	30	36	39
252	32					29	35	38
258	33					28	34	37
264	33					28	34	36
270	34					27	33	35
276	35						32	34
282	36						32	34
288	36						31	33
294	37							32
300	38							32
306	39							31

ROUND CORRUGATED STEEL PIPE
2 2/3" X ½" CORRUGATIONS

THICKNESS	0.064		0.079		0.109		0.138		0.168	
PIPE DIAMETER INCH	MIN. COVER INCH	MAX. FILL FT.	MIN. COVER INCH	MAX. FILL FT.	MIN. COVER INCH	MAX. FILL FT.	MIN. COVER INCH	MAX. FILL FT.	MIN. COVER INCH	MAX. FILL FT.
12	12	213	12	266	12	372	12	479	12	586
15	12	170	12	212	12	298	12	383	12	469
18	12	142	12	177	12	248	12	319	12	391
21	12	121	12	152	12	213	12	274	12	335
24	12	106	12	133	12	186	12	239	12	293
27	12	94	12	118	12	165	12	213	12	260
30	12	85	12	106	12	149	12	191	12	234
36	12	71	12	88	12	124	12	159	12	195
42	12	60	12	76	12	106	12	137	12	167
48	12	53	12	66	12	93	12	119	12	146
54			12	59	12	82	12	106	12	130
60					12	74	12	95	12	117
66							13	87	12	106
72							14	79	13	97
78									14	86
84									15	75

SEE NOTE 1

ROUND CORRUGATED STEEL PIPE
½" X 1" SPIRAL RIB PIPE

THICKNESS	0.064		0.079		0.109	
PIPE DIAMETER INCH	MIN. COVER INCH	MAX. FILL FT.	MIN. COVER INCH	MAX. FILL FT.	MIN. COVER INCH	MAX. FILL FT.
24	12	56	12	70	12	99
30	12	45	12	56	12	79
36	12	37	12	47	12	66
42	12	32	12	40	12	56
48	12	28	12	35	12	49
54		25	15	31	15	44
60		22	15	28	15	39
66			18	25	18	36
72			18	23	18	33
78					21	30
84					21	28

CORRUGATED STEEL PIPE ARCHES
3" X 1" OR 5" X 1" CORRUGATIONS

PIPE DIM. SPAN X RISE INCH	CORNER RADIUS INCH	MIN. COVER INCH	MIN. THICKNESS INCH	MAX. FILL HEIGHT FT.
53 X 41	7	24	0.109	7
60 X 46	8	24	0.109	7
66 X 51	9	18	0.109	9
73 X 55	12	18	0.109	10
81 X 59	14	18	0.109	11
87 X 63	14	18	0.109	10
95 X 67	16	18	0.109	11
103 X 71	16	24	0.109	10
112 X 75	18	24	0.109	10
117 X 79	18	24	0.109	10
128 X 83	18	24	0.138	8
137 X 87	18	24	0.138	7
142 X 91	18	24	0.168	7

SEE NOTE 1

ROUND CORRUGATED STEEL PIPE
5" X 1" CORRUGATIONS

THICKNESS	0.064		0.079		0.109		0.138		0.168	
PIPE DIAMETER INCH	MIN. COVER INCH	MAX. FILL FT.	MIN. COVER INCH	MAX. FILL FT.	MIN. COVER INCH	MAX. FILL FT.	MIN. COVER INCH	MAX. FILL FT.	MIN. COVER INCH	MAX. FILL FT.
36	12	72	12	90	12	127	12	163	12	200
42	12	62	12	77	12	109	12	140	12	171
48	12	54	12	68	12	95	12	122	12	150
54	12	48	12	60	12	84	12	109	12	133
60	12	43	12	54	12	76	12	98	12	120
66	13	39	12	49	12	69	12	89	12	109
72	14	36	13	45	12	63	12	81	12	100
78	16	33	14	41	12	58	12	75	12	92
84	17	31	15	38	13	54	12	70	12	85
90	18	29	16	36	14	50	12	65	12	80
96			17	34	15	47	13	61	12	75
102			18	32	15	44	14	57	13	70
108					16	42	14	54	14	66
114					17	40	15	51	15	63
120					18	38	16	49	15	60
126							17	46	16	57
132							17	44	17	54
138							18	42	18	52
144									18	50

SEE NOTE 1

NOTE 1: TABLE IS FOR PIPE WITH HELICAL LOCK SEAMS OR HELICAL WELDED SEAMS ONLY.

STRUCTURAL STEEL UNDERPASS
6" X 2" CORRUGATIONS

PIPE DIM. SPAN X RISE FT-INCH	CORNER RADIUS INCH	MIN. COVER INCH	MIN. THICKNESS INCH	MAX. FILL HEIGHT FT.
12-2 X 11-0	38	24	0.111	11
13-2 X 11-11	38	24	0.111	10
14-1 X 12-10	38	24	0.111	10
14-10X 13-5	38	24	0.111	10
15-9 X 15-1	38	24	0.111	7
16-5 X 16-1	38	24	0.140	7
17-3 X 17-0	47	36	0.140	9
19-2 X 17-2	47	36	0.170	7
20-4 X 17-9	47	36	0.188	6

REVISIONS

NO.	DATE	APPR.	REMARKS

UTAH DEPARTMENT OF TRANSPORTATION
STANDARD DRAWINGS FOR ROAD AND BRIDGE CONSTRUCTION
SALT LAKE CITY, UTAH

RECOMMENDED FOR APPROVAL _____ JULY 03,2002 DATE

CHAIRMAN STANDARDS COMMITTEE APPROVED _____ JULY 03,2002 DATE

DEPUTY DIRECTOR

FILL HEIGHT FOR METAL PIPE (STEEL)

STANDARD DRAWING TITLE

STD DWG
DG 1

CORRUGATED ALUMINUM PIPE ARCHES
9 IN X 2" IN CORRUGATIONS
BOLTED FABRICATION

PIPE DIM. SPAN X RISE FT-INCH	CORNER RADIUS INCH	MIN. COVER INCH	MIN. THICKNESS INCH	MAX FILL HEIGHT FT.
5-11X 5-5	31.8	13	0.100	24
6-6 X 5-9	31.8	14	0.100	22
7-3 X 6-0	31.8	15	0.100	20
7-11X 6-4	31.8	17	0.100	18
8-7 X 6-7	31.8	18	0.100	17
9-3 X 6-10	31.8	19	0.100	15
10-1 X 7-1	31.8	21	0.100	14
10-8 X 7-5	31.8	22	0.100	13
11-6 X 7-8	31.8	24	0.100	12
12-1 X 7-11	31.8	22	0.125	14
12-10X 8-3	31.8	24	0.150	13
13-7 X 8-6	31.8	23	0.150	12
13-11X 9-5	31.8	24	0.150	12
14-8 X 9-8	31.8	23	0.175	11
15-4 X10-0	31.8	24	0.175	10
16-1 X10-4	31.8	24	0.200	10
16-9 X10-8	31.8	26	0.200	9
17-3 X11-0	31.8	27	0.225	9
18-0 X11-4	31.8	27	0.225	9
18-8 X11-8	31.8	28	0.250	8

USE 5 1/3 BOLTS/FOOT- "" DIA STEEL OR ALUMINUM

ROUND CORRUGATED ALUMINUM PIPE
3 IN X 1 IN CORRUGATIONS

THICKNESS	0.060		0.075		0.105		0.135		0.164	
PIPE DIAMETER INCH	MIN. COVER INCH	MAX. FILL FT.	MIN. COVER INCH	MAX. FILL FT.	MIN. COVER INCH	MAX. FILL FT.	MIN. COVER INCH	MAX. FILL FT.	MIN. COVER INCH	MAX. FILL FT.
36	12	59	12	74	12	101	12	133	12	163
42	12	50	12	63	12	89	12	114	12	140
48	12	44	12	55	12	78	12	100	12	122
54	14	39	14	49	14	69	12	89	12	109
60	15	35	15	44	15	62	14	80	12	98
66	17	32	17	40	17	56	15	73	13	89
72	18	29	18	37	18	52	16	66	15	81
78			20	34	20	43	18	61	16	75
84					21	42	19	57	17	70
90					23	41	20	53	18	65
96					24	38	22	49	19	60
102							23	44	21	54
108							24	40	22	49
114									23	44
120									24	40

SEE NOTE 1

ROUND CORRUGATED ALUMINUM STRUCTURAL PLATE PIPE
9 IN X 2" IN CORRUGATIONS
BOLTED FABRICATION 5 1/3 BOLTS/FOOT " IN DIA.

THICKNESS	0.100		0.125		0.150		0.175		0.200		0.225		0.250	
PIPE DIAMETER (IN)	MIN. COVER INCH	MAX. FILL FT.	MIN. COVER INCH	MAX. FILL FT.	MIN. COVER INCH	MAX. FILL FT.	MIN. COVER INCH	MAX. FILL FT.	MIN. COVER INCH	MAX. FILL FT.	MIN. COVER INCH	MAX. FILL FT.	MIN. COVER INCH	MAX. FILL FT.
60	12	29 31	12	38 45	12	49 60	12	58 70	12	58 81	12	58 92	12	58 103
66	12	26 28	12	35 41	12	44 54	12	53 64	12	53 74	12	53 84	12	53 94
72	13	24 25	12	32 37	12	41 50	12	48 58	12	48 67	12	48 77	12	48 86
78	14	22 23	12	29 35	12	37 46	12	45 54	12	45 62	12	45 71	12	45 79
84	15	20 22	13	27 32	12	35 42	12	41 50	12	41 58	12	41 66	12	41 73
90	16	19 20	14	25 30	13	32 40	12	39 47	12	39 54	12	39 61	12	39 68
96	17	18 19	15	24 28	14	30 37	13	36 44	12	36 50	12	36 57	12	36 64
102	18	17 18	16	22 26	15	29 35	14	34 41	13	34 47	13	34 54	13	34 60
108	19	16 17	17	21 25	16	27 33	14	32 35	14	32 45	14	32 51	14	32 57
114	20	15 16	18	20 23	16	26 31	15	30 37	15	30 42	15	30 48	15	30 54
120	21	14 15	19	19 22	17	24 30	16	29 35	15	29 40	15	29 46	15	29 51
126	22	13 14	20	18 21	18	23 28	17	27 33	16	27 38	16	27 44	16	27 49
132	23	13 14	21	17 20	19	22 27	18	26 32	17	26 37	17	26 42	17	26 47
138	24	12 13	22	16 19	20	21 26	18	26 30	18	25 35	18	25 40	18	25 44
144	25	12 12	22	16 18	21	20 25	19	24 29	18	24 33	18	24 38	18	24 43
150			23	15 18	21	19 24	20	23 28	19	23 32	19	23 36	19	23 41
156				14 17	22	18 23	21	22 27	20	22 31	20	22 35	20	22 39
162					23	18 22	21	21 26	21	21 30	21	21 34	21	21 38
168					24	17 21	22	20 25	21	20 29	21	20 33	21	20 36
174					25	17 20	23	20 24	22	20 28	22	20 31	22	20 35
180							24	19 23	23	19 27	23	19 30	23	19 34
186							25	18 22	24	18 26	24	18 29	24	18 33
192									24	18 25	24	18 28	24	18 32
198									25	17 24	25	17 28	25	17 31
204									26	17 23	26	17 27	26	17 30
210											27	16 26	27	16 29
216											27	16 25	27	16 28
222													28	15 27
228													29	15 27

39/47 = UPPER FIGURE FOR PIPE WITH ALUMINUM BOLTS
LOWER FIGURE FOR PIPE WITH STEEL BOLTS

ROUND CORRUGATED ALUMINUM PIPE
6 IN X 1 IN CORRUGATIONS

THICKNESS	0.060		0.075		0.105		0.135		0.164	
PIPE DIAMETER INCH	MIN. COVER INCH	MAX. FILL FT.	MIN. COVER INCH	MAX. FILL FT.	MIN. COVER INCH	MAX. FILL FT.	MIN. COVER INCH	MAX. FILL FT.	MIN. COVER INCH	MAX. FILL FT.
30	12	62	12	77	12	108	12	139	12	170
36	12	51	12	64	12	90	12	116	12	142
42	12	44	12	55	12	77	12	99	12	121
48	12	38	12	48	12	67	12	87	12	106
54	14	34	14	43	14	60	13	77	12	94
60	15	31	15	38	15	54	14	69	13	85
66	17	28	17	35	17	49	15	63	14	77
72	18	25	18	32	18	45	17	58	15	71
78			20	29	20	41	18	53	16	65
84					21	38	19	49	17	60
90							21	46	19	56
96							22	43	20	53
102							23	40	21	49
108									22	44
114									24	40

SEE NOTE 1

ROUND CORRUGATED ALUMINUM PIPE
2 2/3 IN X " IN CORRUGATIONS

THICKNESS	0.060		0.075		0.105		0.135		0.164	
PIPE DIAMETER INCH	MIN. COVER INCH	MAX. FILL FT.	MIN. COVER INCH	MAX. FILL FT.	MIN. COVER INCH	MAX. FILL FT.	MIN. COVER INCH	MAX. FILL FT.	MIN. COVER INCH	MAX. FILL FT.
12	12	155	12	193	12	271	12	348	12	426
15	12	124	12	154	12	216	12	279	12	340
18	12	103	12	129	12	180	12	232	12	284
21	12	88	12	110	12	154	12	199	12	243
24	12	77	12	96	12	135	12	174	12	213
27	12	68	12	86	12	120	12	155	12	189
30	12	62	12	77	12	108	12	139	12	170
36	12	51	12	64	12	90	12	116	12	142
42	12	44	12	55	12	77	12	99	12	121
48					12	66	12	86	12	106
54					14	54	14	70	14	87
60							15	57	15	71
66									16	57
72									18	45

SEE NOTE 1

ROUND CORRUGATED ALUMINUM PIPE
" IN X " IN 7" IN CORRUGATIONS
SPIRAL RIB PIPE

THICKNESS	0.060		0.075		0.105		0.135	
PIPE DIAMETER INCH	MIN. COVER INCH	MAX. FILL FT.	MIN. COVER INCH	MAX. FILL FT.	MIN. COVER INCH	MAX. FILL FT.	MIN. COVER INCH	MAX. FILL FT.
18	12	55	12	76				
21	12	47	12	65	12	105		
24	12	41	12	57	12	92		
30	15	33	12	45	12	73		
36	18	27	15	38	12	61	12	86
42			18	32	15	52	12	74
48					18	46	15	65
54					21	40	15	57
60					24	36	18	52
66							21	47
72							24	43

FOR HEAVY CONSTRUCTION LOADS (100 KIPS AXLE LOAD) AT LEAST FOUR FEET OF COMPACTED MATERIAL IS NEEDED OVER THE TOP OF THE PIPE.

CORRUGATED ALUMINUM PIPE ARCHES
2 2/3 IN X " IN CORRUGATIONS

PIPE DIM. SPAN X RISE INCH	CORNER RADIUS INCH	MIN. COVER INCH	MIN. THICKNESS INCH	MAX FILL HEIGHT FT.
17 X 13	3		0.060	11
21 X 15	3	18	0.060	9
24 X 18	3	24	0.060	7
28 X 20	3	24	0.060	5
35 X 24	4	30	0.060	6
42 X 29	4"	30	0.060	5
49 X 33	5"	30	0.075	5
57 X 38	6"	30	0.135	6
64 X 43	7	30	0.135	5
71 X 47	8	24	0.164	5

SEE NOTE 1

CORRUGATED ALUMINUM PIPE ARCHES
3 IN X 1IN CORRUGATIONS

PIPE DIM. SPAN X RISE INCH	CORNER RADIUS INCH	MIN. COVER INCH	MIN. THICKNESS INCH	MAX FILL HEIGHT FT.
53 X 41	7	24	0.105	7
60 X 46	8	24	0.105	7
66 X 51	9	18	0.105	9
73 X 55	12	18	0.105	10
81 X 59	14	18	0.105	11
87 X 63	14	18	0.105	10
95 X 67	16	18	0.105	11
103 X 71	16	24	0.135	10
112 X 75	18	24	0.135	10
117 X 79	18	24	0.164	10

FOR 0.105 THRU 0.164 IN THICKNESSES USE " IN DIA BOLTS
SEE NOTE 1

NOTE 1:TABLE IS FOR PIPE WITH HELICAL LOCK SEAMS OR HELICAL WELDED SEAMS ONLY.

REVISIONS

NO.	DATE	APPR.	REMARKS

UTAH DEPARTMENT OF TRANSPORTATION
STANDARD DRAWINGS FOR ROAD AND BRIDGE CONSTRUCTION
SALT LAKE CITY, UTAH

RECOMMENDED FOR APPROVAL — JULY 03, 2002 DATE

CHAIRMAN STANDARDS COMMITTEE APPROVED — JULY 03, 2002 DATE

DEPUTY DIRECTOR

FILL HEIGHT FOR METAL PIPE (ALUMINUM)

STANDARD DRAWING TITLE

STD DWG
DG 2

HIGH DENSITY POLYETHYLENE END SECTION (HDPE)

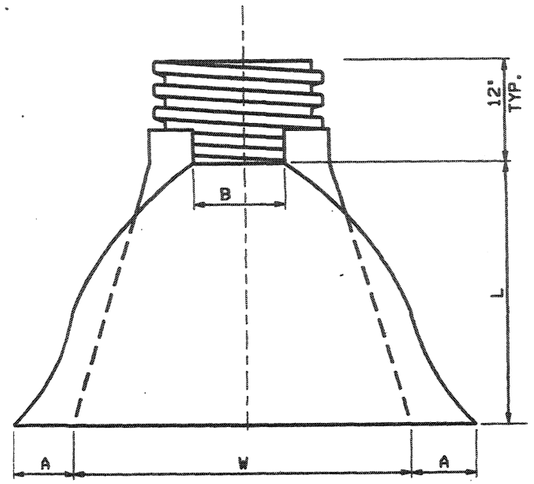

TOP VIEW

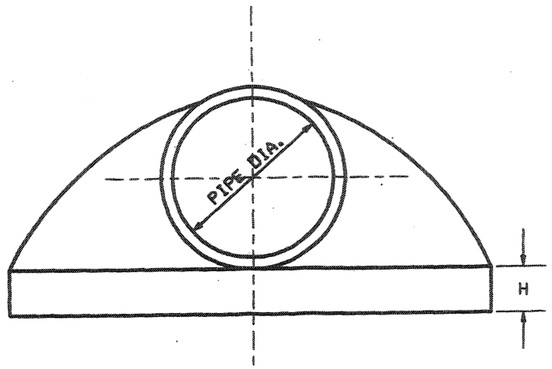

END VIEW

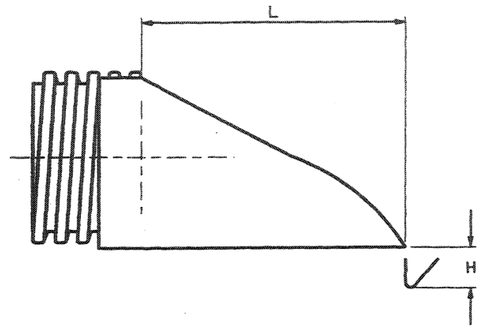

SIDE VIEW

TABLE 1: HDPE AND PVC PIPES END SECTIONS

PIPE DIAMETER INCH	DIMENSIONS IN INCHES				
	A(1±)	B MAX	H(1±)	L(1/2±)	W(2±)
18	7.5	15	6.5	32	35
24	7.5	18	6.5	36	45
30	10.5	N/A	7.0	53	68
36	10.5	N/A	7.0	53	68

TABLE 2: MAXIMUM FILL HEIGHT (SEE NOTE NO. 3)

PIPE SIZE DIA. INCH	PIPE TYPE							
	HIGH DENSITY POLYETHYLENE RIBBED SMOOTH LINED (HDPE)	SMOOTH WALL (SOLID) WALL THICKNESS INCHES					POLYVINYL CHLORIDE (PVC)	CORRUGATED POLYETHYLENE (HDPE) (AASHTO M 294)
		0.6	0.85	0.92	1.15	1.38		
	MAX.FILL HEIGHT FT.							
12								30
15								30
18	24		46				24	30
24	24			34			25	30
30	24				34		23	30
36	24					34	22	30
42								
48								

NOTES:

1. IN ORDER TO ASSURE PROPER FIT WITH 30" AND 36" END SECTIONS ARE ATTACHED BY WELDING TO A SHORT STUB OF 30" OR 36" PIPE AND REQUIRE A STANDARD CONNECTING BAND TO MAKE THE ATTACHMENT.
2. DO NOT USE CULVERT END SECTIONS WITHIN THE CLEAR ZONE.
3. MAXIMUM FILL HEIGHT MEASURED FROM TOP OF PIPE TO TOP OF PAVEMENT SURFACE AT HIGHEST FILL SECTION.

REVISIONS

NO.	DATE	APPR.	REMARKS
1	06/26/02	M.P.	CORRECT SPELLING, MADE EDITORIAL CHANGES TO NOTES 1,2 AND TABLE 2.

UTAH DEPARTMENT OF TRANSPORTATION
STANDARD DRAWINGS FOR ROAD AND BRIDGE CONSTRUCTION
SALT LAKE CITY, UTAH

RECOMMENDED FOR APPROVAL — DEC.19,2002 DATE

CHAIRMAN STANDARDS COMMITTEE
APPROVED — DEC.19,2002 DATE
DEPUTY DIRECTOR

MAXIMUM FILL HEIGHT AND END SECTIONS FOR HDPE AND PVC PIPES
STANDARD DRAWING TITLE

STD DWG
DG 3

PIPE CULVERT MINIMUM COVER

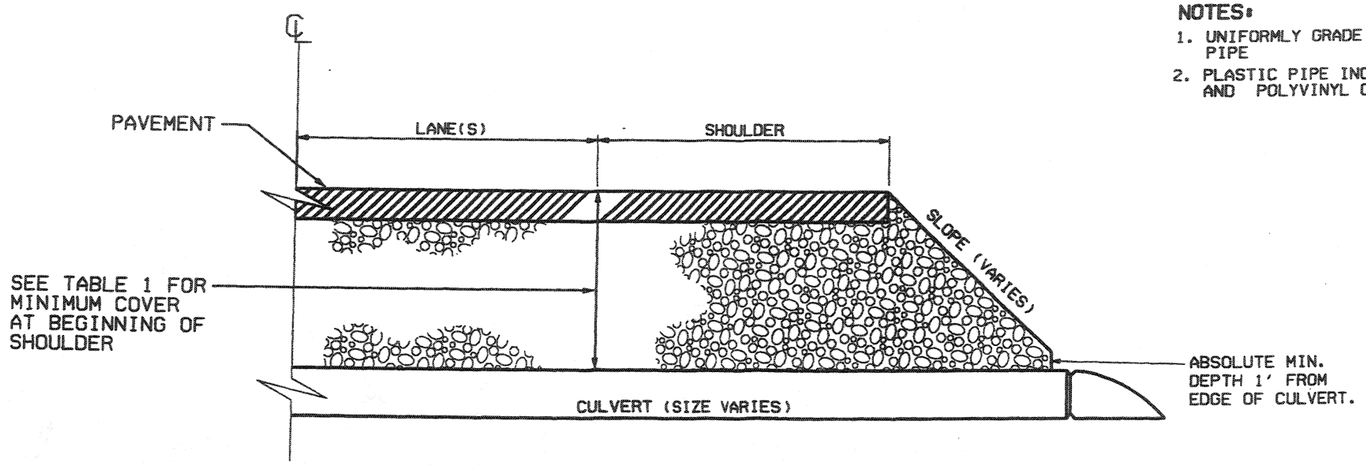

NOTES:

1. UNIFORMLY GRADE THE GROUND AROUND PIPE
2. PLASTIC PIPE INCLUDES POLYETHYLENE AND POLYVINYL CHLORIDE.

TABLE 1: PIPE CULVERTS MINIMUM COVER

SURFACE TYPE	CORRUGATED METAL PIPES AND PIPE ARCHES	STRUCTURAL PLATE PIPES AND PIPE ARCHES	REINFORCED CONCRETE PIPES	PLASTIC PIPES (SEE NOTE 2)
FLEXIBLE PAVEMENTS OR UNPAVED	1/5 (DIA. OR SPAN) OR 2' MIN.	" (DIA. OR SPAN) OR 2' MIN.	2' MIN.	2' MIN.
RIGID PAVEMENTS	1/5 (DIA. OR SPAN) OR 1'6"MIN.	" (DIA. OR SPAN) OR 1'6" MIN.	1'6" MIN.	2' MIN.

NOTE: DRAWING NOT TO SCALE

REVISIONS

NO.	DATE	APPR.	REMARKS
1	06/28/02	M.F.	CORRECT ARROW IN PIPE CULVERT MINIMUM COVER DETAIL

UTAH DEPARTMENT OF TRANSPORTATION
STANDARD DRAWINGS FOR ROAD AND BRIDGE CONSTRUCTION
SALT LAKE CITY, UTAH

RECOMMENDED FOR APPROVAL — DEC.19,2002 DATE

CHAIRMAN STANDARDS COMMITTEE APPROVED — DEC.19,2002 DATE

DEPUTY DIRECTOR

PIPE CULVERTS MINIMUM COVER

STANDARD DRAWING TITLE

STD DWG
DG 4

BACKFILL/ BEDDING REQUIREMENTS FOR PLASTIC PIPE, METAL PIPE & PIPE ARCH CULVERTS

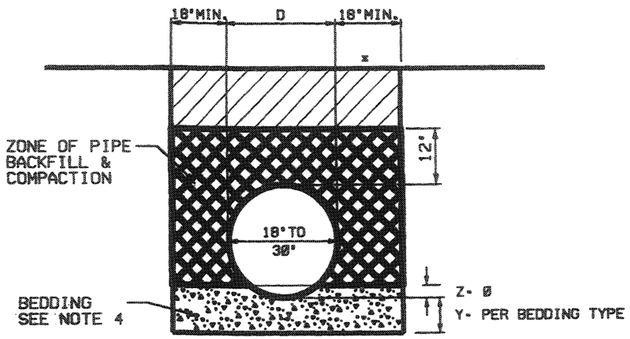

FOR TYPE I BEDDING Y- 8"
FOR TYPE II BEDDING Y-12"
FOR TYPE III BEDDING Y-24"

x INCREASE THIS DIMENSION TO D IF PIPE IS PLACED IN AN EMBANKMENT WITHOUT THE BENEFIT OF TRENCHING

DETAIL "A"

FOR CIRCULATOR PIPE
HAVING DIAMETERS LESS THAN 36"

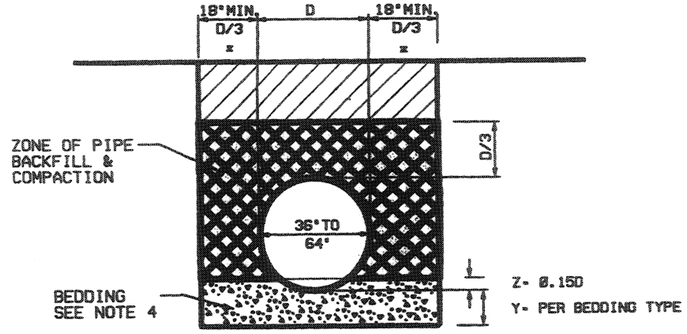

FOR TYPE I BEDDING Y- 8"
FOR TYPE II BEDDING Y-12"
FOR TYPE III BEDDING Y-24"

x INCREASE THIS DIMENSION TO D IF PIPE IS PLACED IN AN EMBANKMENT WITHOUT THE BENEFIT OF TRENCHING

DETAIL "C"

FOR CIRCULATOR PIPE
HAVING DIAMETERS BETWEEN 36" AND 72" INCLUSIVE

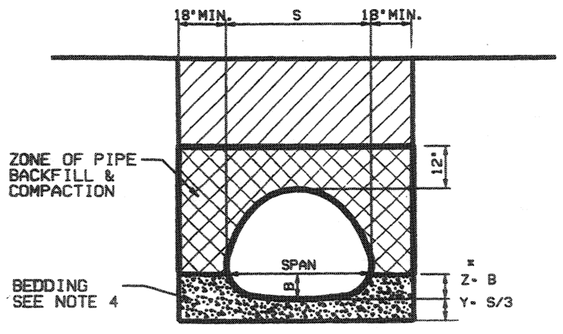

DETAIL "B"

FOR ARCH PIPE
HAVING SPANS LESS THAN 72" INCLUSIVE

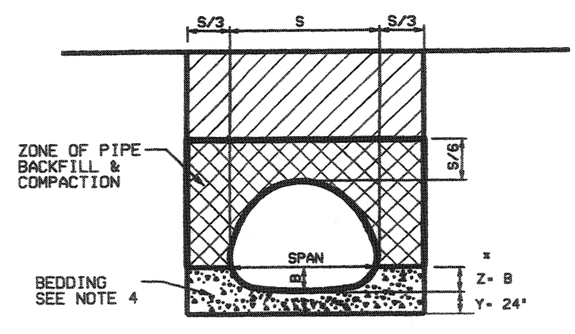

DETAIL "D"

FOR ARCH PIPE
HAVING SPANS OF 74" AND LARGER

x Z - DEPTH OF BEDDING AT INVERT IS TO THE WIDEST POINT ON THE PIPE ARCH CULVERT.

LEGEND:

- USE ON SITE BEDDING MATERIAL OR GRANULAR BACKFILL BORROW (2" MAX.) AS REQ'D. (IN ACCORDANCE WITH THE TYPE OF BEDDINGS I,II OR III) MEETING THE FOLLOWING REQUIREMENTS:
  - A. ON-SITE MATERIAL EXCLUDING UNSTABLE SOIL AS DEFINED BELOW.
  - B. USE GRANULAR BACKFILL BORROW HAVING INTERMEDIATE FRACTIONS FROM NO.200 SIEVE TO 2" MAXIMUM MATERIAL.
- ZONE OF PIPE BACKFIL & COMPACTION. USE ON-SITE MATERIAL CONTAINING NO ROCK LARGER THEN 2" IN SIZE & FREE OF FROZEN LUMPS OR CLAY.

FLOWABLE FILL MAY BE USED FOR BACKFILL AND BEDDING.

NOTES:

1. PRECOMPACTION & COMPACTION: PER AASHTO T 99 WITH DENSITY NOT LESS THAN 96 PERCENT OF LABORATORY DENSITY.
2. BEDDING DETAIL AS SHOWN IS FOR USE WITH UDOT'S STANDARD DRAWINGS DG 1, DG 2 & DG 3.
3. RECESS THE BEDDING TO RECEIVE CULVERT JOINTS WHERE APPLICABLE.
4. HAUNCH AREAS UNDER PIPE MUST BE IN FIRM AND INTIMATE CONTACT WITH THE ENTIRE BOTTOM SURFACE OF THE PIPE WITHOUT DISTURBING THE PIPE FROM SPECIFIED LINE AND GRADE.
5. THE WIDTH OF THE TRENCH BOX, OR OTHER SHIELD, MUST EXCEED THE REQUIRED WIDTH OF THE BACKFILL IN THE BEDDING AND BACKFILL ZONES.

TABLE 1

TYPE OF BEDDING	TYPE OF SOIL FOUNDATION	TYPE OF BEDDING MATERIAL
TYPE I	OTHER THAN ROCK OR UNSTABLE SOIL	ON-SITE MATERIAL TO BE PRECOMPACTED
TYPE II	ROCK	ON - SITE MATERIAL
TYPE III	UNSTABLE	GRANULAR BACKFILL BORROW (2" MAX.)

UNSTABLE SOILS - FOUNDATION CONSISTING OF ALL ORGANIC SOILS OR MATERIALS SUCH AS PEAT, MOSS & BOG, OR FINE GRAINED SOILS (SILTS OR CLAYS) AND UNCEMENTED SANDS WHOSE WATER CONTENT EXCEED THEIR LIQUID LIMIT. SUCH SOILS WILL REQUIRE THAT A "TYPE III" BEDDING BE USED.

REVISIONS

NO.	DATE	APPR.	REMARKS

UTAH DEPARTMENT OF TRANSPORTATION
STANDARD DRAWINGS FOR ROAD AND BRIDGE CONSTRUCTION
SALT LAKE CITY, UTAH

JULY 03,2002 DATE — RECOMMENDED FOR APPROVAL
JULY 03,2002 DATE — CHAIRMAN STANDARDS COMMITTEE APPROVED
DEPUTY DIRECTOR

PLASTIC PIPE, METAL PIPE OR PIPE ARCH CULVERT BEDDING
STANDARD DRAWING TITLE

STD DWG
DG 5

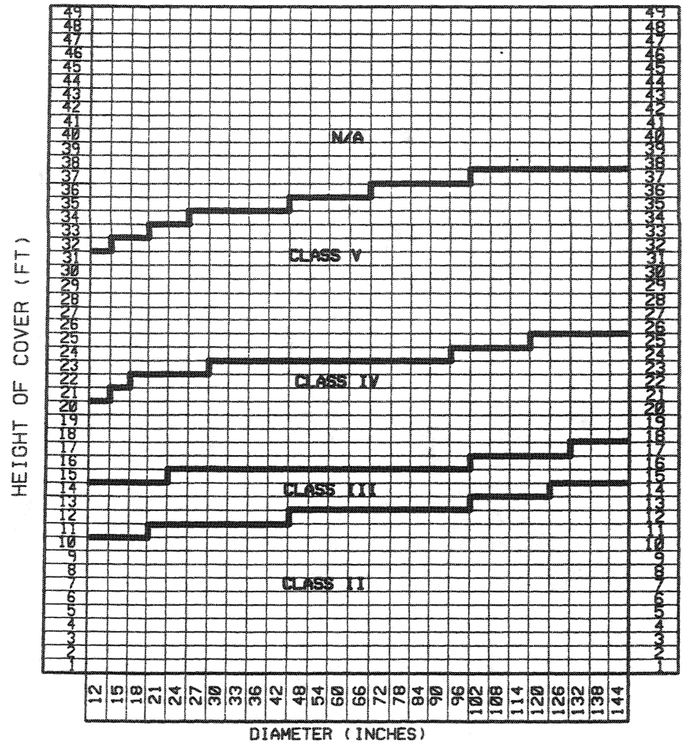

REINFORCED CIRCULAR PIPE FILL HEIGHT TABLE

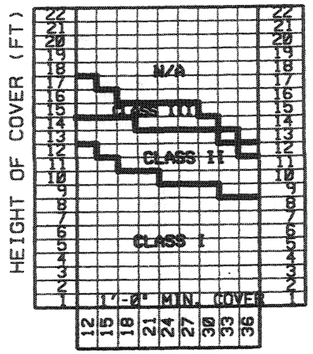

NON-REINFORCED
CIRCULAR PIPE
FILL HEIGHT TABLE

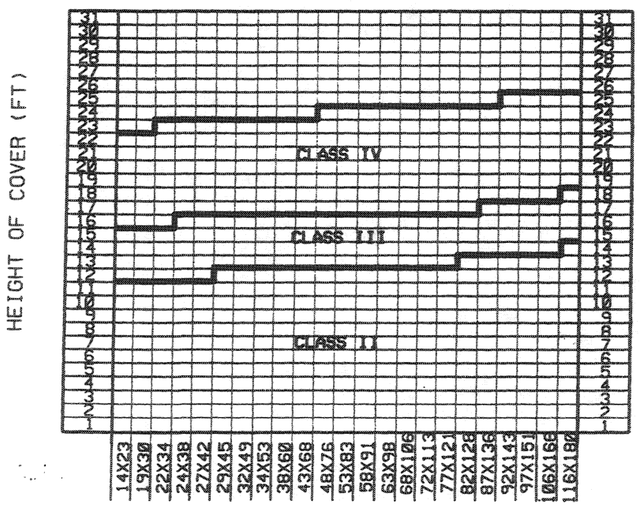

HORIZONTAL ELLIPTICAL PIPE FILL HEIGHT TABLE

NOTES:

1. PRECOMPACTION & COMPACTION: REFER TO AASHTO T-99
2. RECESS THE BEDDING TO RECEIVE CULVERT JOINTS WHERE APPLICABLE.
3. HAUNCH AREAS UNDER PIPE MUST BE IN FIRM AND INTIMATE CONTACT WITH THE ENTIRE BOTTOM SURFACE OF THE PIPE WITHOUT DISTURBING THE PIPE FROM SPECIFIED LINE AND GRADE.
4. USE A MINIMUM 12 INCHES HEIGHT (H) OF FILL BETWEEN THE TOP THE CULVERT AND BOTTOM OF ROADWAY SURFACING FOR REINFORCED AND NON-REINFORCED CONCRETE PIPES.
5. MAINTAIN A MINIMUM 24 INCHES OF COVER FOR REINFORCED AND 48 INCHES OF COVER FOR NON-REINFORCED PIPE DURING CONSTRUCTION.

INSTALLATION SOILS AND MINIMUM COMPACTION REQUIREMENTS

TYPE OF BEDDING	TYPE OF SOIL FOUNDATION	BEDDING THICKNESS	HAUNCH & OUTER BEDDING	LOWER SIDE
TYPE I	OTHER THAN ROCK OR UNSTABLE SOIL	DO/24 BUT NOT LESS THAN 6"	95 % A1,A3	90% A1, A3 OR 95% A2, A4 OR 100% A5, A6 OR NATURAL SOILS OF EQUAL FIRMNESS
TYPE II	ROCK	DO/12 BUT NOT LESS THAN 12"	95 % A1,A3	90% A1, A3 OR 95% A2, A4 OR 100% A5, A6 OR NATURAL SOILS OF EQUAL FIRMNESS
TYPE III	UNSTABLE *	NOT LESS THAN 12"	95 % A1,A3	90% A1, A3 OR 95% A2, A4 OR 100% A5, A6 OR NATURAL SOILS OF EQUAL FIRMNESS

* UNSTABLE SOIL FOUNDATION : FOUNDATION CONSISTING OF ORGANIC SOILS OR MATERIALS SUCH AS PEAT, MOSS & BOG OR FINE GRAINED SOILS (SILTS OR CLAYS) AND UNCEMENTED SANDS WHOSE WATER CONTENT EXCEEDS THEIR LIQUID LIMIT. SUCH SOILS WILL REQUIRE THAT A 'TYPE III' BEDDING BE USED.

LEGEND:

- USE ON SITE BEDDING MATERIAL OR GRANULAR BACKFILL BORROW (2"MAX.) AS REQ'D. (IN ACCORDANCE WITH THE TYPE OF BEDDINGS I,II OR III) MEETING THE FOLLOWING REQUIREMENTS:
  - A. ON-SITE MATERIAL EXCLUDING UNSTABLE SOIL AS DEFINED BELOW.
  - B. USE GRANULAR BACKFIL BORROW HAVING INTERMEDIATE FRACTIONS FROM NO.200 SIEVE TO 2" MAXIMUM MATERIAL.
- ZONE OF PIPE BACKFIL & COMPACTION. USE ON-SITE MATERIAL CONTAINING NO ROCK LARGER THEN 2" IN SIZE & FREE OF FROZEN LUMPS OR CLAY.

BACKFILL / BEDDING REQUIREMENTS

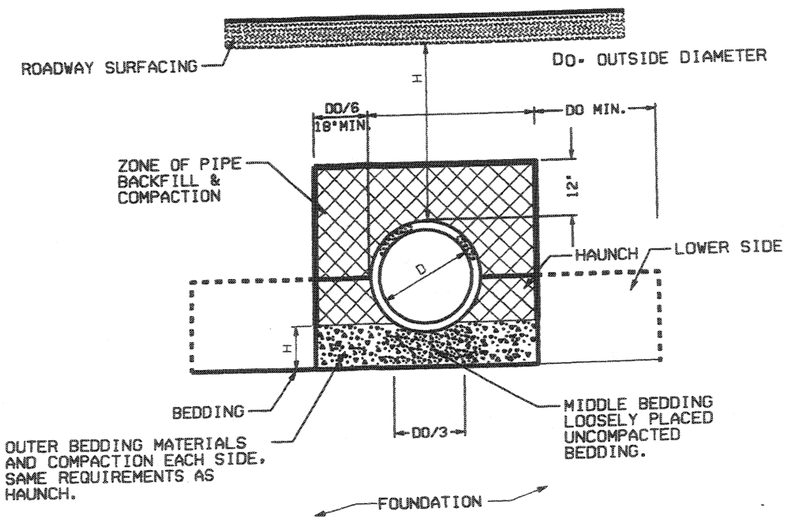

REVISIONS

NO	DATE	APPR.	REMARKS

UTAH DEPARTMENT OF TRANSPORTATION
STANDARD DRAWINGS FOR ROAD AND BRIDGE CONSTRUCTION
SALT LAKE CITY, UTAH

RECOMMENDED FOR APPROVAL — JULY 03,2002 DATE

CHAIRMAN STANDARDS COMMITTEE
APPROVED — JULY 03,2002 DATE

DEPUTY DIRECTOR

PRECAST CONCRETE PIPE CULVERT

STANDARD DRAWING TITLE

STD DWG
DG 6

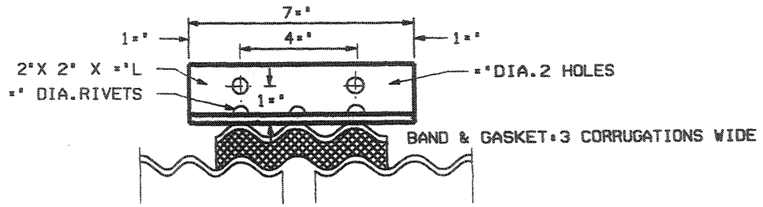

18" - 30" DIAMETER INCLUSIVE

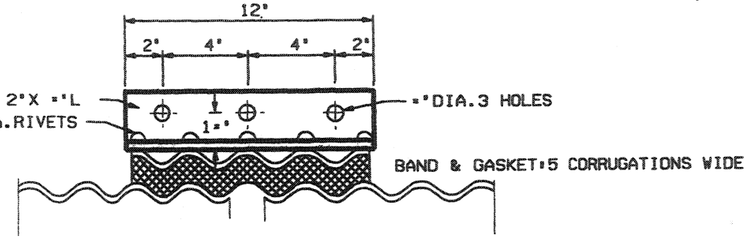

36" - 60" DIAMETER INCLUSIVE

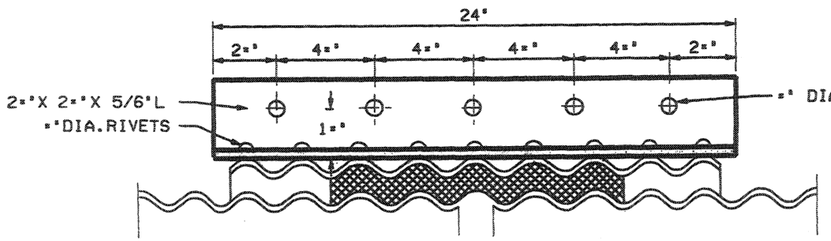

66" - 84" DIAMETER INCLUSIVE

BAND: 9 CORRUGATIONS WIDE
GASKET: 5 CORRUGATIONS WIDE

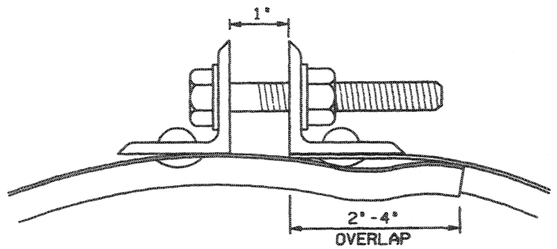

"DIA. HEX. BOLT & NUT WITH WASHER OR
" DIA. CARRIAGE BOLT & NUT WITH WASHER
(9/16" X " SLOTTED OPENING)

TYPE "A" C.M.P. COUPLING

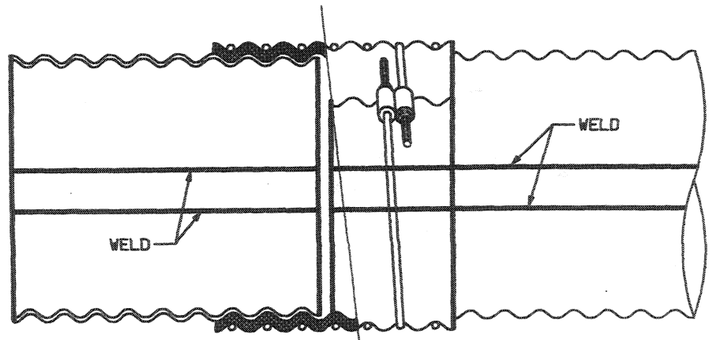

BAND WIDTH

7.5" FOR 18" - 30" DIA. C.M.P. INCLUSIVE
12" FOR 36" - 60" DIA. C.M.P. INCLUSIVE
24" FOR 66" - 84" DIA. C.M.P. INCLUSIVE
1 PIECE BAND FOR 18" - 42" DIA. C.M.P.
2 PIECE BAND FOR 48" - 84" DIA. C.M.P.

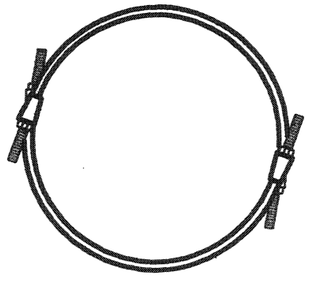

TYPE "B" C.M.P. COUPLING

SIZE OF ROD & SILO TYPE LUG

" DIA. FOR 18" - 21" DIA. C.M.P.
" DIA. FOR 24" - 36" DIA. C.M.P.
" DIA. FOR 42" - 84" DIA. C.M.P.
1 PIECE HOOPS FOR 18" - 42" DIA. C.M.P.
2 PIECE HOOPS FOR 48" - 84" DIA. C.M.P.

TABLE 1

NOMINAL PIPE DIAMETER INCH	GASKET LENGTH INCH
15	44
18	54
21	63
24	72
27	80
30	90
33	97
36	107
42	126
48	144
54	160
60	179
66	198
72	214
78	232
84	248
90	267
96	286

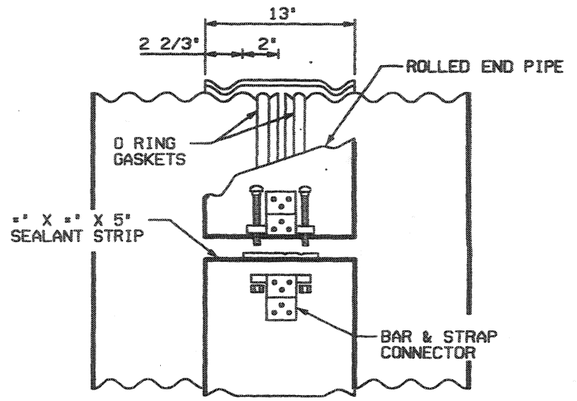

BAND THICKNESS: MATCH PIPE WALL THICKNESS, BUT IN NO CASE LESS THAN 16 GAUGE AND NEED NOT EXCEED 14 GAUGE. USE TWO PIECE BAND FOR PIPE OVER 42" DIAMETER.

TYPE "C"

LONGITUDINAL SEAMS OF C.M.P. AT 45°.

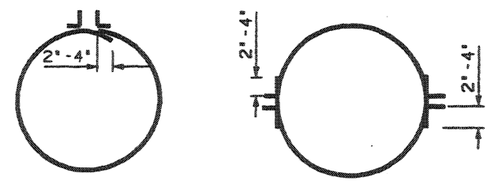

ONE PIECE BAND
FOR 18" - 42" DIA.
PIPE CULVERTS.

TWO PIECE BAND
FOR 48" - 84" DIA.
PIPE CULVERTS.

ALTERNATE OVERLAPS FOR TWO PIECE BANDS, FOR BOTH TYPES, AS SHOWN ON DIAGRAM

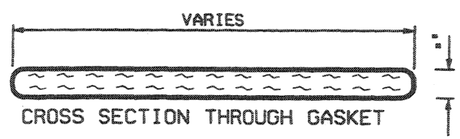

CROSS SECTION THROUGH GASKET

NOTES:

1. THICKNESS OF CONNECTING BANDS: IN ACCORDANCE WITH STANDARD SPECIFICATIONS.
2. KEEP DIRT & GRAVEL FROM BETWEEN PIPE & BAND.
3. USE A CHAIN HOIST, CHAIN OR CABLE CINCHING TO PRODUCE A TIGHT JOINT BEFORE NUTS ARE TIGHTENED.
4. USE A 2" MINIMUM OVERLAP FOR BANDS.
5. COMPLY WITH TABLE 1 FOR GASKETS DIMENSIONS USE A CLOSED CELL NEOPRENE, SKINNED ALL FOUR SIDES MATERIAL MEETING THE REQUIREMENTS OF ASTM D 1056 GRADE SCE-43L. GASKETS, 1-PIECE CONTINUOUS CONSTRUCTION.
6. FOR FASTENING ANGLES USE FLATHEAD RIVETS FREE OF SHARP POINTS OR EDGES (AASHTO M 36-60).

REVISIONS

NO.	DATE	APPR.	REMARKS

UTAH DEPARTMENT OF TRANSPORTATION
STANDARD DRAWINGS FOR ROAD AND BRIDGE CONSTRUCTION
SALT LAKE CITY, UTAH

RECOMMENDED FOR APPROVAL — JULY 03,2002 DATE

CHAIRMAN STANDARDS COMMITTEE
APPROVED — JULY 03,2002 DATE

DEPUTY DIRECTOR

GASKETED JOINTS OR COUPLING BANDS FOR C.M.P.

STANDARD DRAWING TITLE

STD DWG
DG 7

END SECTIONS FOR CIRCULAR PIPE CORRUGATIONS

3" X 1" , 2 2/3" X ="
5" X 1" , =" X =" X 7="
AND =" X 1" X 11="

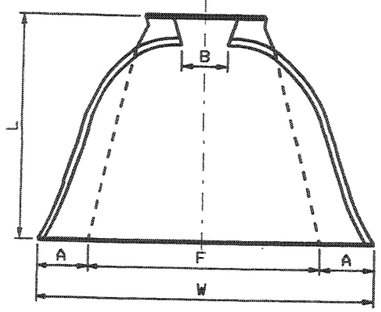

PLAN

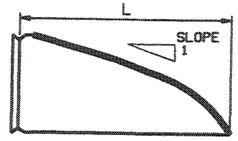

TYPICAL CROSS SECTION

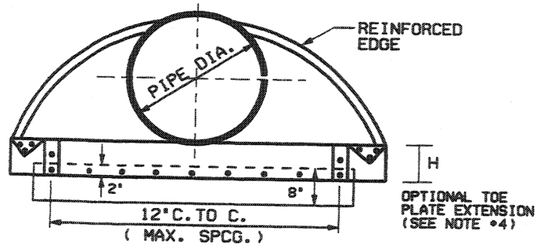

ELEVATION

LINE NO.	PIPE DIA	THICK--NESS	END SECTION DIMENSIONS						
			A	B	H	F	L	W MAX. WIDTH	APPROXIMATE AVERAGE END SECTION SLOPE
	INCH	INCH	INCH	INCH	INCH	INCH	INCH	INCH	
1	12	0.064	5	7	6	22	21	44	2=
2	15	0.064	6	8	6	28	26	52	2=
3	18	0.064	7	10	6	34	31	58	2=
4	21	0.064	8	12	6	40	36	66	2=
5	24	0.064	9	13	6	46	41	72	2=
6	30	0.079	11	16	8	55	51	88	2=
7	36	0.079	13	19	9	70	60	105	2
8	42	0.109	15	25	10	82	69	122	2=
9	48	0.109	17	29	12	88	78	131	2
10	54	0.109	17	33	12	100	84	143	2
11	60	0.109	17	36	12	112	87	157	1=
12	66	0.109	17	39	12	118	87	162	1=
13	72	0.109	17	44	12	120	87	169	1=
14	78	0.109	17	48	12	130	87	178	1=
15	84	0.109	17	52	12	136	87	184	1 1/3
16	90	0.109	17	58	12	142	87	188	1=
17	96	0.109	17	58	12	144	87	197	1=

FILL SLOPE NEED NOT MATCH THE END SECTION SLOPE.
FILL CAN BE SHAPED AT EACH SITE TO FIT.

1. SOME LARGER SIZES MAY REQUIRE FIELD ASSEMBLY.
2. OPTIONAL TOE PLATES MAY BE PROVIDED TO DEPTH SPECIFIED.
3. FOR 78" X 52" AND 84" X 58" SIZES REINFORCED EDGES TO BE SUPPLEMENTED WITH GALVANIZED STIFFENER ANGLES. THE ANGLES TO BE ATTACHED BY GALVANIZED NUTS AND BOLTS FOR STEEL UNITS OR ALUMINIUM NUTS AND BOLTS FOR ALUMINIUM UNITS.

TYPE 1

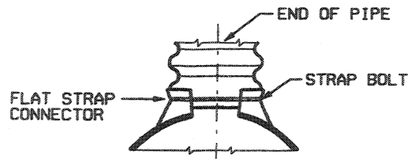

AVALIABLE IN SIZES 12" THROUGH 24" ROUND AND 17" X 13" THROUGH 28" X 22" PIPE-ARCHES

TYPE 2

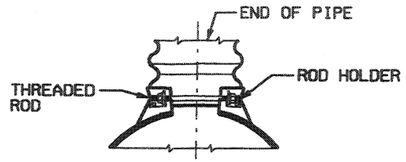

AVALIABLE IN SIZES 30" THROUGH 96" ROUND AND 35" X 24" THROUGH 57" X 38" PIPE-ARCHES

TYPE 3

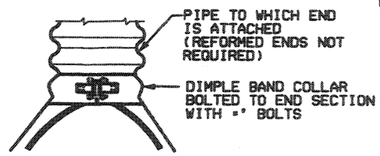

AVAILABLE FOR ALL ROUND AND PIPE ARCH SIZES SHOWN (TYPE 1 AND TYPE 2 CONDITIONS ARE RECOMMENDED FOR THE SMALLER SIZES WITH ANNULAR ENDS)

APPLICABLE SPECIFICATIONS (CIRCULAR AND ARCH PIPE)

1. CONFORM TO:
   AASHTO M 218 (GALVANIZED STEEL SHEET)
   AASHTO M 197 (ALUMINIUM ALLOY SHEET)
2. ALL 3 PIECE BODIES TO HAVE 12 GAUGE MIN. SIDES AND 10 GAUGE MIN. CENTER PANELS. MULTIPLE PANEL BODIES TO HAVE SEAMS WHICH ARE TO BE TIGHTLY JOINED BY GALVANIZED RIVETS OR BOLTS FOR STEEL UNITS AND ALUMINIUM RIVETS OR BOLTS FOR ALUMINUM UNITS.
3. GALVANIZED STEEL OR ALUMINIUM TOE PLATE TO BE AVAILABLE AS AN ACCESSORY. WHEN SPECIFIED. AND WILL BE THE SAME THICKNESS AS THE END SECTION.
4. GALVANIZED STEEL OR ALUMINIUM LIFTING LUG AVAILABLE AS AN ACCESSORY. WHEN SPECIFIED.
5. END SECTIONS CAN BE USED WITH ANY OR PIPE OR PIPE ARCH WALL THICKNESS SPECIFIED.

END SECTIONS FOR CORRUGATED METAL PIPE ARCHES

3" X 1" , 5" X 1"
AND 2 2/3" X ="

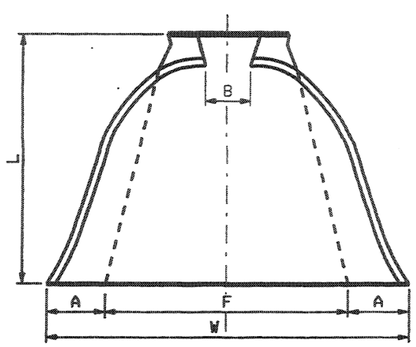

PLAN

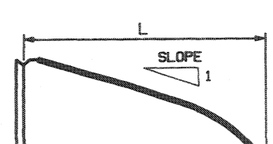

TYPICAL CROSS SECTION

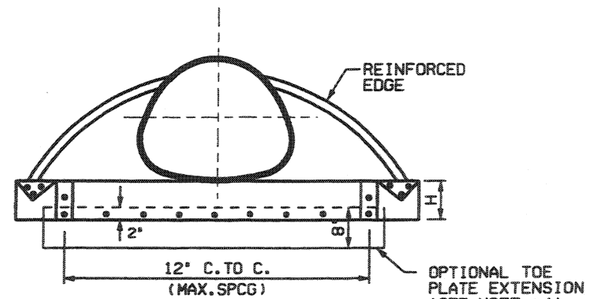

ELEVATION

LINE NO.	SPAN X RISE	EQUIV ROUND	THICKNESS		END SECTION DIMENSIONS						
			GALV. STEEL	ALUM.	A MIN.	B MAX.	H MIN.	F MIN.	L±50	W MAX. WIDTH	APPROXIMATE AVERAGE END SECTION SLOPE
	INCH	INCH	INCH	INCH	INCH	INCH	INCH	INCH	INCH	INCH	
1	17X13	15	0.064	5	5	9	6	28	20	52	2=
2	21X15	18	0.064	6	6	11	6	34	24	58	2
3	24X18	21	0.064	7	7	12	6	40	28	63	2=
4	28X20	24	0.064	7	7	16	6	46	32	70	2
5	35X24	30	0.079	9	9	16	6	58	39	85	1=
6	42X29	36	0.079	11	11	18	7	73	46	104	1=
7	49X33	42	0.109	12	12	21	9	82	53	117	1=
8	57X38	48	0.109	16	16	26	12	88	62	132	1=
9	64X43	54	0.109	17	17	30	12	100	69	144	1=
10	71X47	60	0.109	17	17	36	12	112	77	156	1=
11	77X52	66	0.109	17	17	36	12	124	77	167	1=
12	83X57	72	0.109	17	17	44	12	130	77	177	1=

FILL SLOPE NEED NOT MATCH THE END SECTION SLOPE.
FILL CAN BE SHAPED AT EACH SITE TO FIT.

1. SOME LARGER SIZES MAY REQUIRE FIELD ASSEMBLY.
2. OPTIONAL TOE PLATES MAY BE PROVIDED TO DEPTH SPECIFIED.
3. FOR 78" X 52" AND 84" X 58" SIZES REINFORCED EDGES TO BE SUPPLEMENTED WITH GALVANIZED STIFFENER ANGLES. THE ANGLES TO BE ATTACHED BY GALVANIZED NUTS AND BOLTS FOR STEEL UNITS OR ALUMINIUM NUTS AND BOLTS FOR ALUMINIUM UNITS.
4. ANGLE REINFORCMENT WILL BE PLACED UNDER THE CENTER PANEL SEAMS ON THE 88" X 58" SIZES.

REVISIONS

NO.	DATE	APPR.	REMARKS

UTAH DEPARTMENT OF TRANSPORTATION
STANDARD DRAWINGS FOR ROAD AND BRIDGE CONSTRUCTION
SALT LAKE CITY, UTAH

RECOMMENDED FOR APPROVAL — JULY 03, 2002 DATE

CHAIRMAN STANDARDS COMMITTEE
APPROVED — JULY 03, 2002 DATE

DEPUTY DIRECTOR

STANDARD DRAWING TITLE
METAL CULVERT END SECTION

STD DWG
DG 8

METAL & PLASTIC CULVERTS

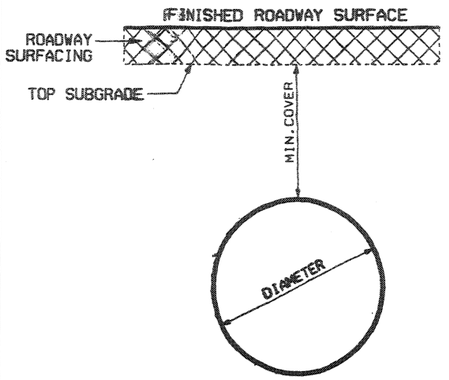

METAL PIPE ARCHES

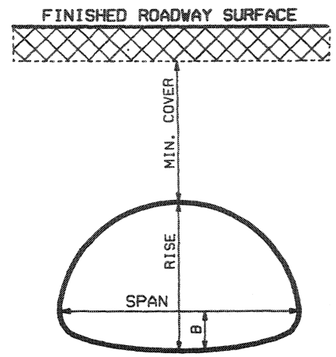

MINIMUM COVER

A. MEASURE MINIMUM COVER FROM THE TOP OF PIPE CULVERT TO THE BOTTOM OF ROADWAY SURFACING.

B. MEASURE MAXIMUM FILL HEIGHT FROM THE TOP OF THE PIPE THE PIPE TO THE TOP OF THE PAVEMENT FOR BOTH FLEXIBLE AND RIGID PAVEMENTS.

C. MINIMUM COVER OVER THE CROWN OF THE PIPE IS ADEQUATE ONLY FOR FINISHED CONSTRUCTION. PROVIDE ADEQUATE COVER TO PROTECT PIPE AND PIPE ARCH FROM DAMAGE DURING CONSTRUCTION..

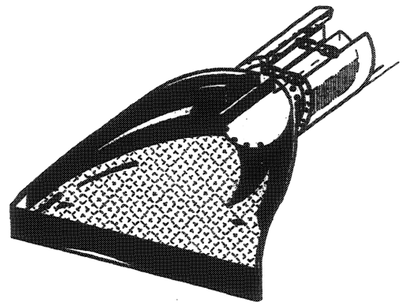

METAL INSERT

FOR CONNECTING CONCRETE PIPE OR CORRUGATED POLYETHYLENE PIPE TO METAL END SECTION.

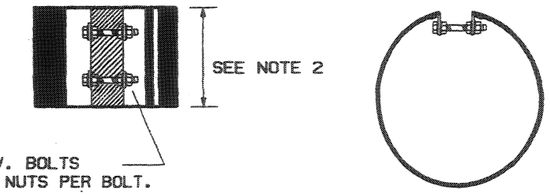

METAL INSERTS

1. FABRICATED END SECTION FROM NON FLAMMABLE MATERIALS.
2. CONNECT METAL END SECTIONS TO CONCRETE PIPES OR PLASTIC PIPES USING METAL INSERTS.
3. FOR PIPE DIAMETERS UP TO AND INCLUDING 60 INCH. USE A MINIMUM OF 2 BOLTS WITH A LENGTH OF 12 INCHES MINIMUM.
4. FOR PIPE DIAMETERS GREATER THAN 60 INCH USE A MINIMUM OF 3 BOLTS WITH A LENGTH OF 18 INCH MINIMUM.
5. GALVANIZED METAL INSERT AND ALL BOLTS, WASHERS AND RIVETS OR WELDS.
6. USE THE SAME WALL THICKNESS FOR METAL INSERT AND METAL END SECTION.
7. CLEAN AND COAT ALL WELDS WITH APPROVED ZINC RICH COMPOUND AS RECOMMENDED BY THE SHEET MANUFACTURE.

MULTIPLE INSTALLATIONS

PIPE ARCHES

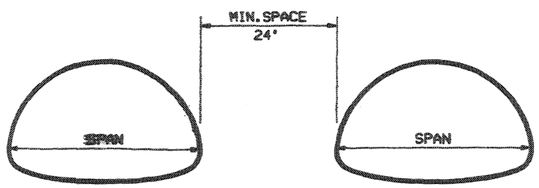

SPAN (INCH)	MINIMUM SPACE (INCH)
UP TO 36	24
72 TO 86	1/3 SPAN

PIPE CULVERTS

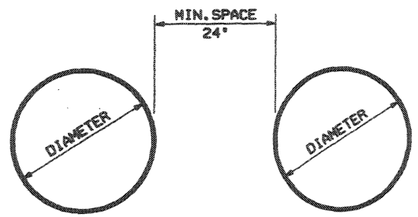

DIAMETER (INCH)	MINIMUM SPACE (INCH)
UP TO 24	24
48 TO 96	= DIAMETER
96 TO 120	48

NO	DATE	APPR.	REMARKS

REVISIONS

UTAH DEPARTMENT OF TRANSPORTATION
STANDARD DRAWINGS FOR ROAD AND BRIDGE CONSTRUCTION
SALT LAKE CITY, UTAH

RECOMMENDED FOR APPROVAL — JULY 03,2002 DATE

CHAIRMAN STANDARDS COMMITTEE
APPROVED

DEPUTY DIRECTOR — JULY 03,2002 DATE

MISCELLANEOUS PIPE DETAILS
STANDARD DRAWING TITLE

STD DWG
DG 9

CHECK DAMS

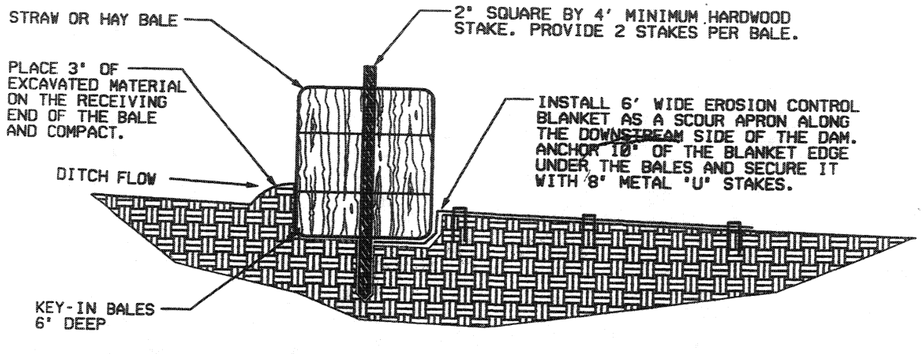

SECTION Y - Y

CONSTRUCT THE CHECK DAM SO THAT POINT 'A' IS APPROXIMATELY 4" LOWER THAN POINT 'B'.

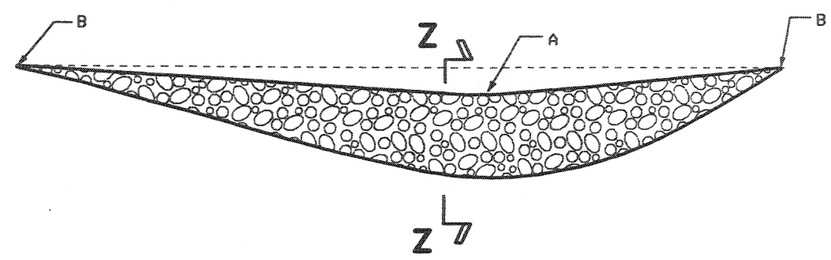

STONE CHECK DAM

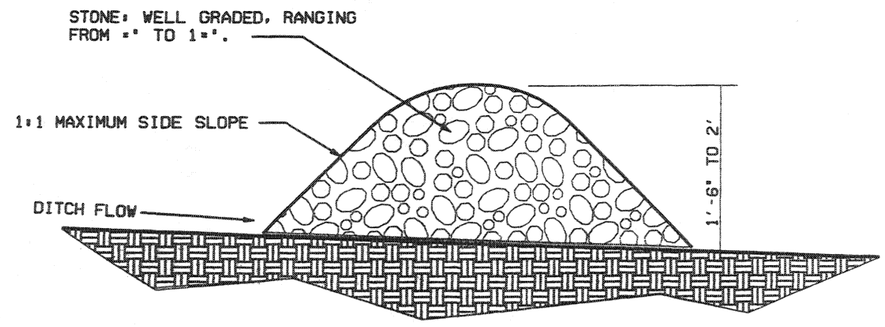

SECTION Z - Z

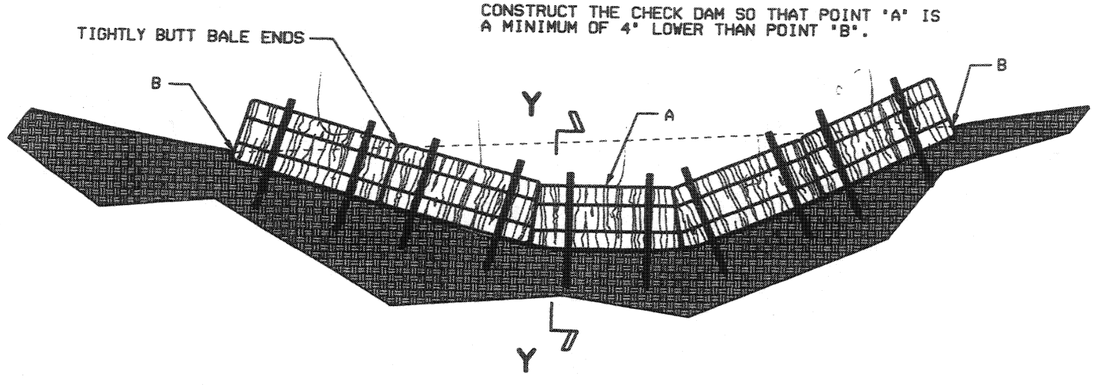

STRAW OR HAY BALE CHECK DAM

NOTES:

1. PLACE CHECK DAMS PERPENDICULAR TO THE FLOWLINE OF THE DITCH.
2. DO NOT PLACE CHECK DAMS ACROSS NATURAL STREAM BEDS.
3. CONSTRUCT CHECK DAMS TO ENSURE WATER DOES NOT FLOW AROUND THE ENDS OF THE DAM.

REVISIONS

NO.	DATE	APPR.	REMARKS

UTAH DEPARTMENT OF TRANSPORTATION
STANDARD DRAWINGS FOR ROAD AND BRIDGE CONSTRUCTION
SALT LAKE CITY, UTAH

RECOMMENDED FOR APPROVAL — JULY 03,2002 DATE

CHAIRMAN STANDARDS COMMITTEE APPROVED — JULY 03,2002 DATE

DEPUTY DIRECTOR

STANDARD DRAWING TITLE

TEMPORARY EROSION CONTROL (CHECK DAMS)

STD DWG
EN 1

SILT FENCE

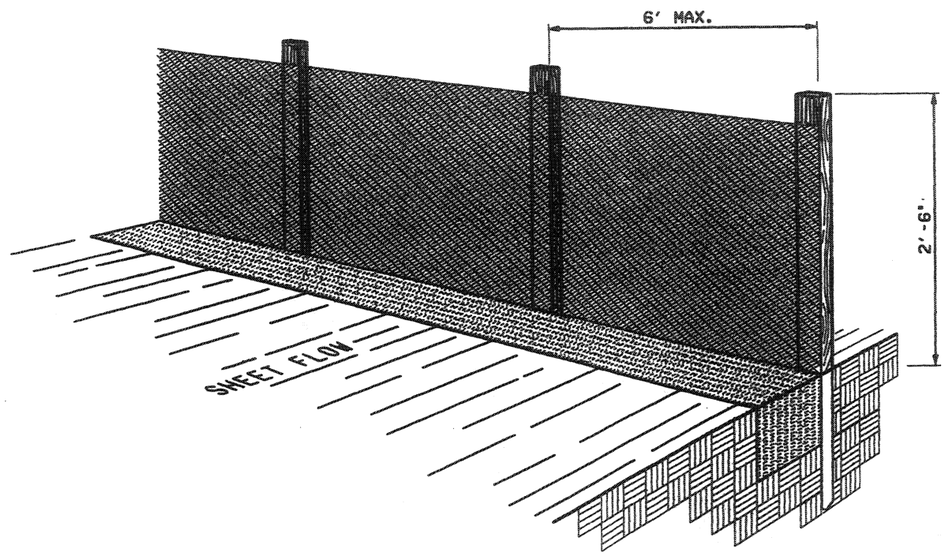

PERSPECTIVE VIEW

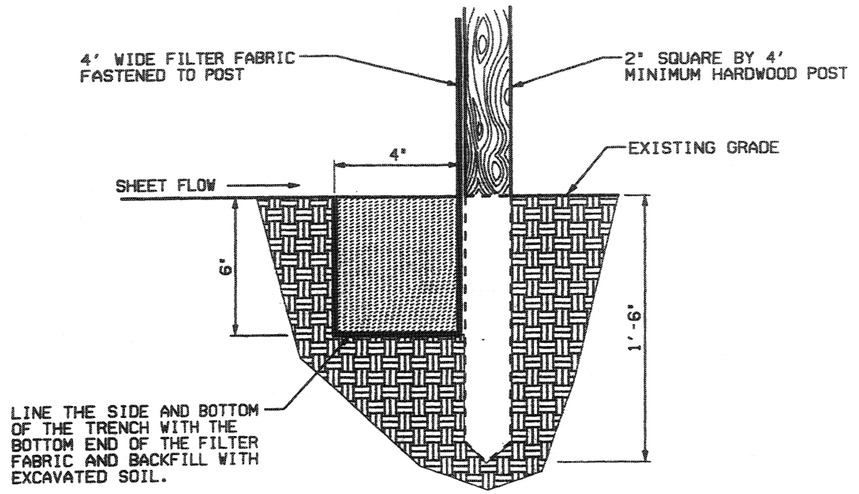

SECTION

NOTES:

1. WHERE POSSIBLE, LAYOUT THE SILT FENCE 5' TO 10' BEYOND THE TOE OF SLOPE.
2. ALIGN THE FENCE ALONG THE CONTOUR AS CLOSE AS POSSIBLE.
3. WHEN EXCAVATING THE TRENCH, USE MACHINERY THAT WILL PRODUCE NO MORE THAN THE DESIRED DIMENSIONS.
4. EXTEND THE BOTTOM 1'- 4" OF FILTER FABRIC TO LINE ALL THREE SIDES OF THE TRENCH.
5. TO AVOID EXCESSIVE PONDING OF WATER AT LOW POINTS ALONG THE FENCE, PROVIDE AN OPENING IN THE SILT FENCE AND INSTALL A CHECK DAM.
6. AVOID USING JOINTS ALONG THE FENCE AS MUCH AS POSSIBLE. IF A JOINT IS NECESSARY, SPLICE THE FILTER FABRIC AT A POST WITH 6" OVERLAPS AND SECURELY FASTEN BOTH ENDS TO THE POST.
7. MAINTAIN A PROPERLY FUNCTIONING SILT FENCE THROUGHOUT THE DURATION OF THE PROJECT OR UNTIL DISTURBED AREAS HAVE BEEN VEGETATED.
8. REMOVE SEDIMENT AS IT ACCUMULATES AND PLACE IT IN A STABLE AREA APPROVED BY THE ENGINEER.

REVISIONS

NO.	DATE	APPR.	REMARKS
1	04/24/03	F.N.	CORRECT POST SPACING IN PERSPECTIVE VIEW

UTAH DEPARTMENT OF TRANSPORTATION
STANDARD DRAWINGS FOR ROAD AND BRIDGE CONSTRUCTION
SALT LAKE CITY, UTAH

RECOMMENDED FOR APPROVAL — APRIL 24, 2003 DATE

CHAIRMAN STANDARDS COMMITTEE APPROVED — APRIL 24, 2003 DATE

DEPUTY DIRECTOR

STANDARD DRAWING TITLE
TEMPORARY EROSION CONTROL (SILT FENCE)

STD DWG
EN 2

DGN FILE: G:\ENDS\STANDARD_DRAWINGS\IMPERIAL\APPROVED\ENVIRONMENTAL CONTROLS (EN)\EN02.DGN
OCT-2003

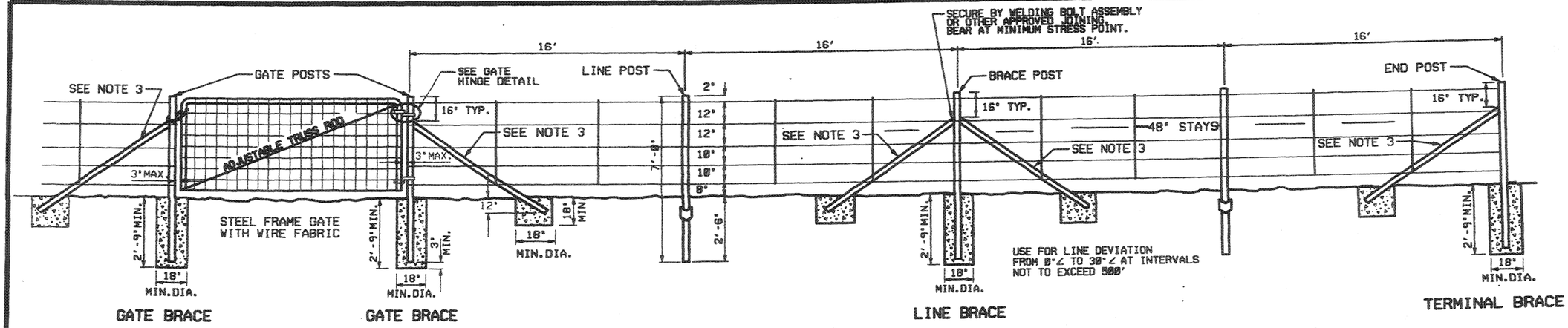

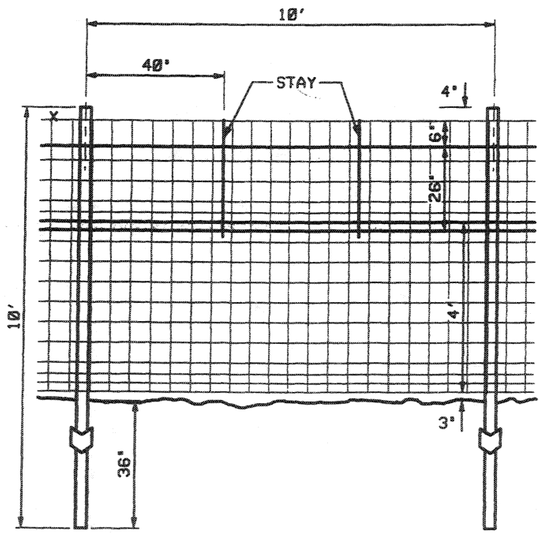

RIGHT OF WAY FENCE TYPE G (DEER BARRIER)

FOR FENCETYPES A, B, D, E AND F POST SIZE, SPACING AND BRACING ARE AS SHOWN IN TYPICAL INSTALLATION ABOVE. SPACE 2 STAYS EVENLY BETWEEN EACH SET OF POSTS.

INSTALLATION WITH METAL POSTS
(TYPICAL)

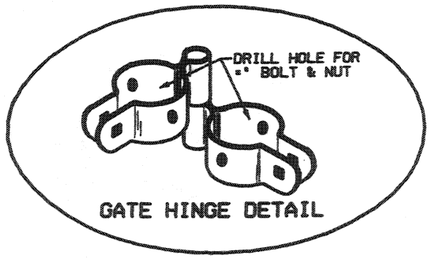

GATE HINGE DETAIL

NOTES:

1. SET METAL POSTS IN CLASS "B" CONCRETE.
2. LINE POSTS FOR TYPE A,B,D,,E & F FENCE
   A-TEE CHANNELS OR "Y" OR "U" SECTIONS, MINIMUM WEIGHT 1.33 LB/FT. ON LENGTH.
   B-STEEL PIPES,1.900 INCH OUTSIDE DIAMETER SCHEDULE 40 PIPE, WEIGHT 2.72 LB/FT OF LENGTH OR HIGH TENSILE TRIPLE COATED STEEL PIPE, WEIGHT 2.23 LB/FT OF LENGTH.
   C-ALTERNATE LINE POSTS APPROVED BY THE ENGINEER TO HAVE A MINIMUM RESISTING SECTION MODULUS OF 0.32 IN^3 PERPENDICULAR AND 0.12 IN^3 PARALLEL TO THE FENCE LINE. IN^2 ANCHOR PLATES TO POSTS, MINIMUM SURFACE AREA OF 20 IN^2 MINIMUM 18 GAUGE THICKNESS AND MINIMUM WEIGHT 0.67 LB/EACH
3. BRACE AND CORNER PSTS (ASTM A 36)
   A-BRACE AND CORNER POSTS FOR TYPE A,B,D,E & F FENCES USE 2"X 2"X " ANGLES, MINIMUM WEIGHT 4.10 LB/FT.
   B-BRACES FOR TYPE A,B,D,E& F FENCES, USE 2"X 2" X " ANGLES, MINIMUM WEIGHT 3.19 LB/FT.
   C-PIPES USED AS CORNER AND BRACE POSTS, USE 2.375 IN. OUTSIDE DIAMETER, WEIGHT 3.65LB/FT. OR HIGH TENSILE TRIPLE COATED STEEL, 2.375 INCH OUTSIDE DIAMETER WEIGHT 3.11 LB/FT.
4. LINE POSTS FOR TYPE A,B,D,E & F FENCE: 7'-0" LENGTH
   LINE POSTS FOR TYPE G FENCE: 10'-0"
5. TERMINATE MESH AND BARBER WIRE AT EACH CORNER POST.
6. USE CORNER POST BRACES ON ALL FENCE LINE DEVIATIONS GREATER THAN 30°. USE CORNER POST BRACES ON TYPE G FENCE WITH DEVIATIONS GREATER THAN 15°.
7. GALVANIZE METAL PER (ASTM A 702) OR PAINTED (ASTM A 123)

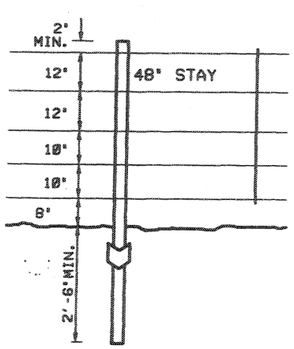

TYPE A

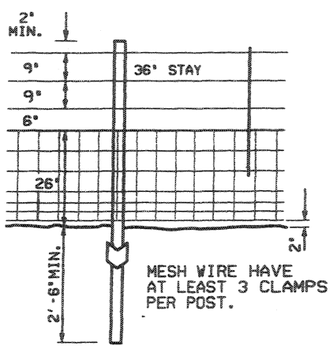

MESH WIRE HAVE AT LEAST 3 CLAMPS PER POST.

TYPE B

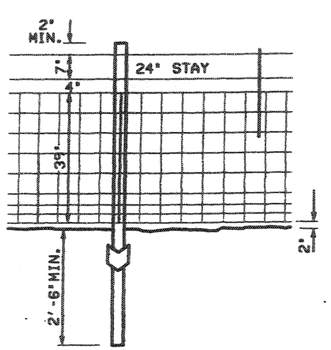

TYPE D

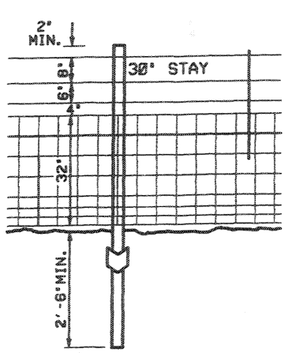

TYPE E

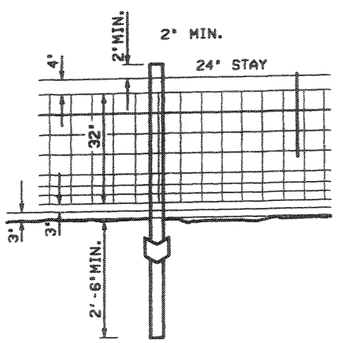

TYPE F

TO BE INSTALLED IN DEER COUNTRY

NO	DATE	APPR.	REVISIONS	REMARKS

UTAH DEPARTMENT OF TRANSPORTATION
STANDARD DRAWINGS FOR ROAD AND BRIDGE CONSTRUCTION
SALT LAKE CITY, UTAH

RECOMMENDED FOR APPROVAL — JULY 03,2002 DATE

CHAIRMAN STANDARDS COMMITTEE
APPROVED

DEPUTY DIRECTOR — JULY 03,2002 DATE

RIGHT OF WAY FENCE AND GATES (METAL POST)

STANDARD DRAWING TITLE

STD DWG
FG 2A

INSTALLATION WITH METAL POSTS
(TYPICAL)

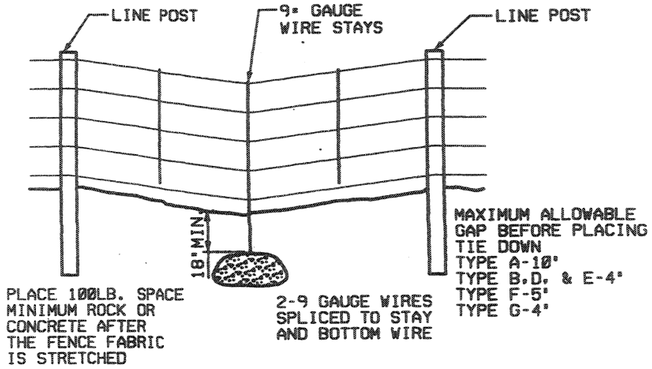

TYPICAL SAG SECTION

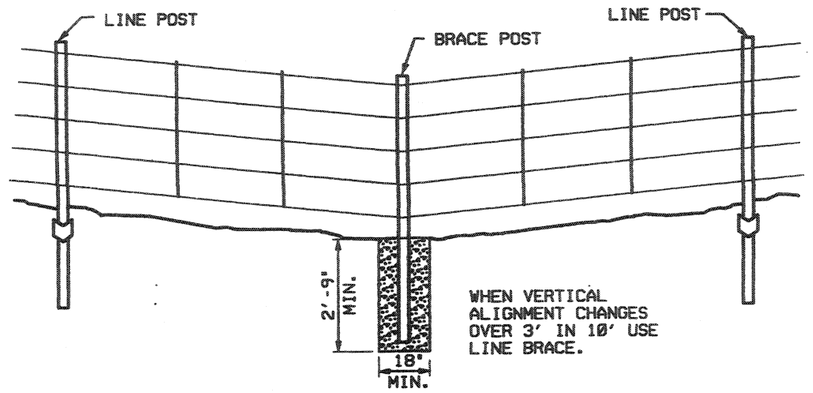

TYPICAL VERTICAL ALIGNMENT CHANGE

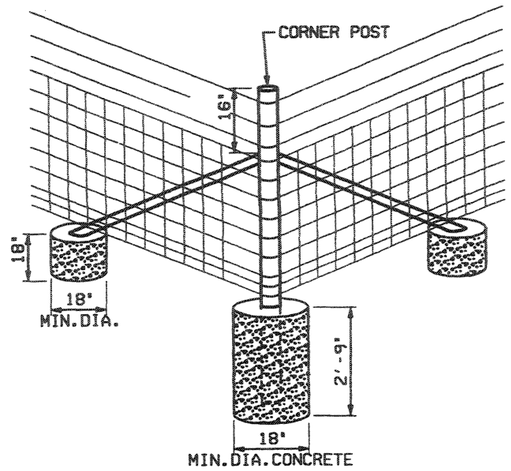

CORNER BRACE
SEE NOTE *6 STD DWG FG 2A

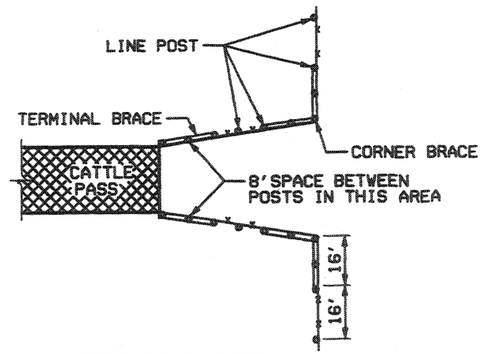

CATTLE PASS FENCE
DETAIL

DEER COUNTRY
NOTE: LAP THE 47" & 26" MESH WIRE 2". TIE OR CLAMP 47" & 26" MESH WIRE TOGETHER. THE SPACING NOT TO EXCEED 2'-0" SPACING OF CONNECTINGS.

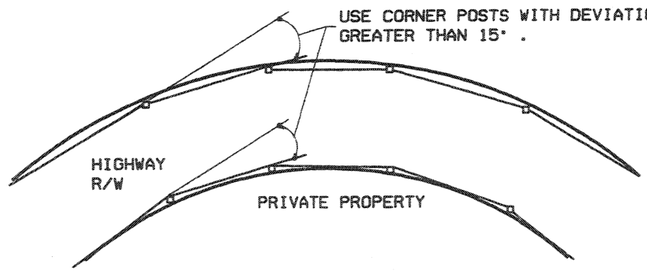

DEER BARRIER ON CURVES
SEE NOTE *6 STD DWG FG 2A

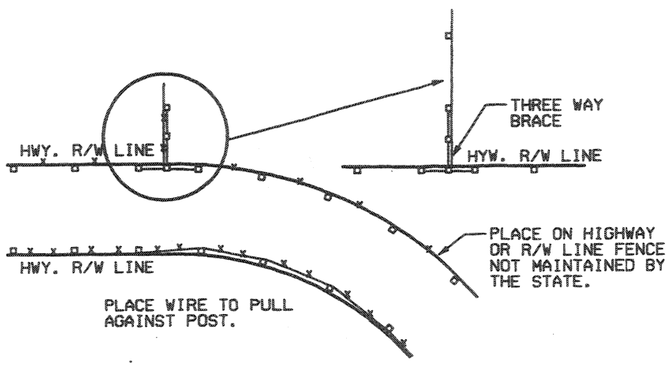

POST & WIRE LOCATION

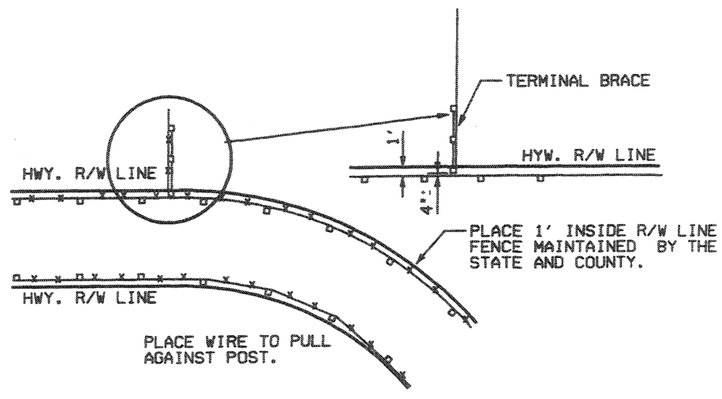

POST & WIRE LOCATION

REVISIONS

NO.	DATE	APPR.	REMARKS

UTAH DEPARTMENT OF TRANSPORTATION
STANDARD DRAWINGS FOR ROAD AND BRIDGE CONSTRUCTION
SALT LAKE CITY, UTAH

RECOMMENDED FOR APPROVAL — JULY 03,2002 DATE

CHAIRMAN STANDARDS COMMITTEE
APPROVED — JULY 03,2002 DATE

DEPUTY DIRECTOR

RIGHT OF WAY
FENCE AND GATES
(METAL POST)
STANDARD DRAWING TITLE

STD DWG
FG 2B

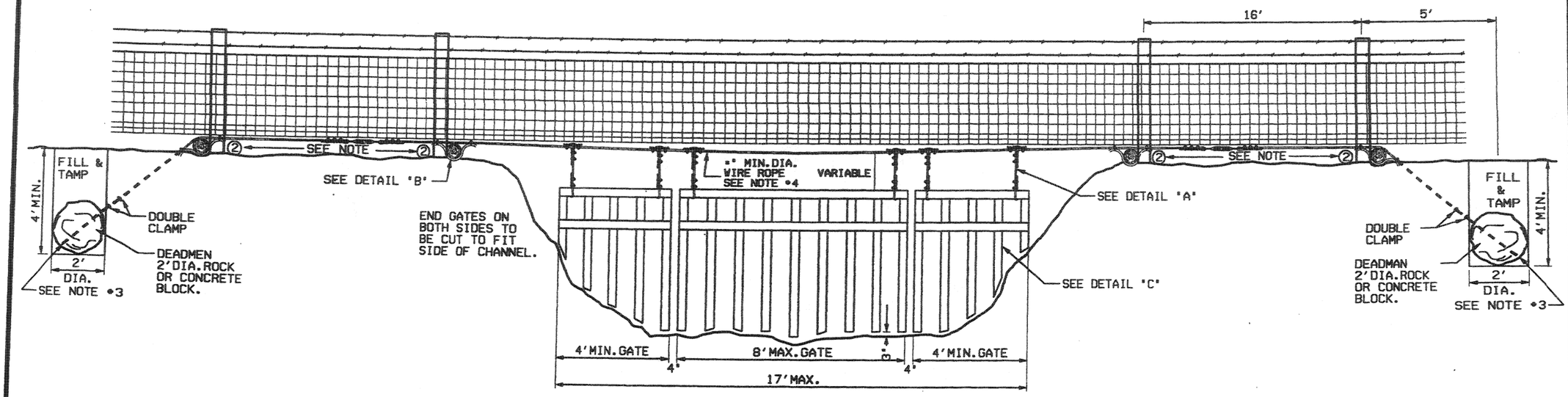

DETAIL 'B'

INSTALLATION DETAIL

DETAIL 'A'

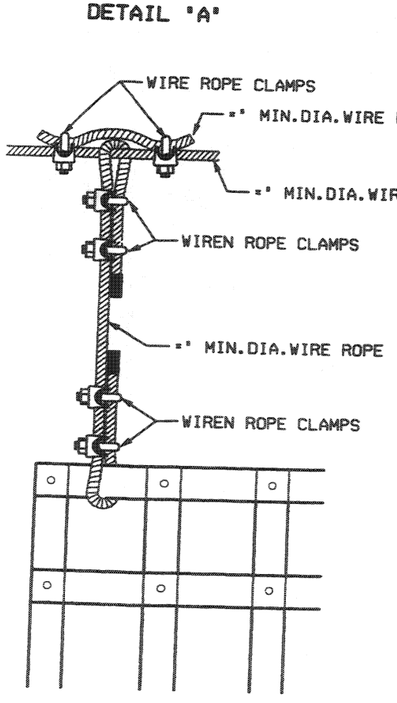

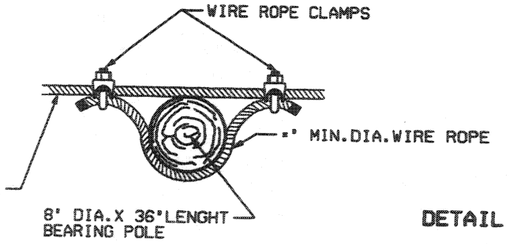

DETAIL 'C'

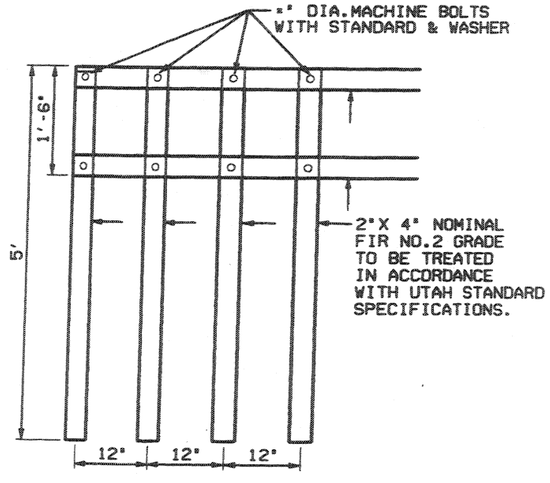

NOTES:

1. INSTALL BEARING POLES,DEADMAN AND TURN BUCKLE THE SAME ON BOTH SIDES ON THE CHANNEL.
2. INSTALL WIRE ROPE ON THE UPSTREAM SIDE OF THE FENCE POSTS.
3. WRAP WIRE ROPE AROUND ROCK AND CLAMP WITH A DOUBLE CLAMP.
4. USE •' DIA. WIRE 6'X 12' WITH A BREAKING STRENGTH OF 10000 LBS.

DETAIL 'D'

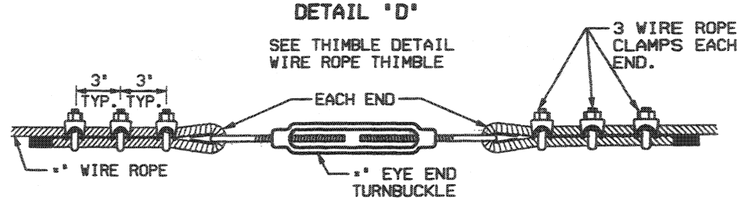

THIMBLE DETAIL

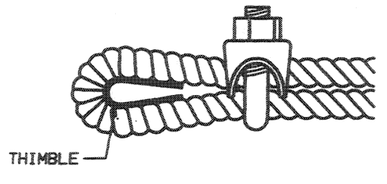

REVISIONS

NO.	DATE	APPR.	REMARKS

UTAH DEPARTMENT OF TRANSPORTATION
STANDARD DRAWINGS FOR ROAD AND BRIDGE CONSTRUCTION
SALT LAKE CITY, UTAH

RECOMMENDED FOR APPROVAL — JULY 03,2002 DATE

CHAIRMAN STANDARDS COMMITTEE APPROVED — JULY 03,2002 DATE

DEPUTY DIRECTOR

SWING GATES
TYPE 1
FOR GATES LESS THAN 17'

STANDARD DRAWING TITLE

STD DWG
FG 3

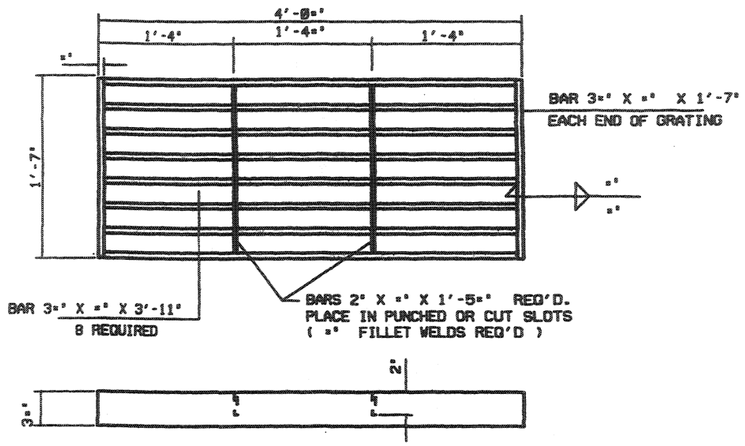

STANDARD GRATING
GRATE WEIGHT: 272 LBS

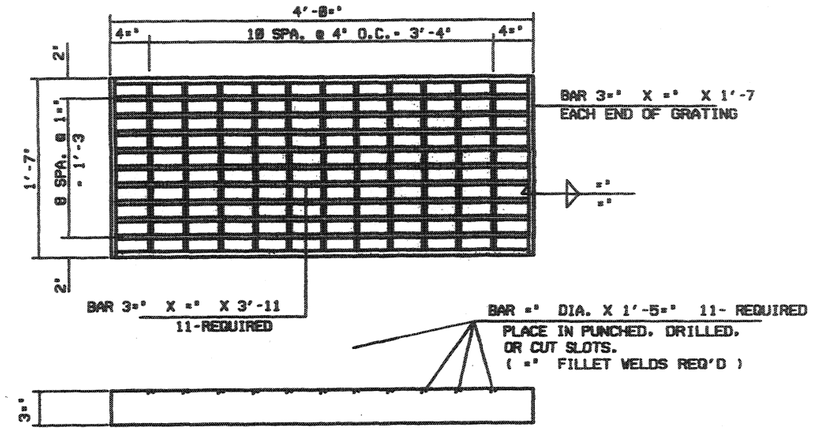

BICYCLE-SAFE GRATING
GRATE WEIGHT: 297 LBS

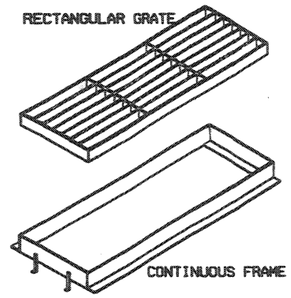

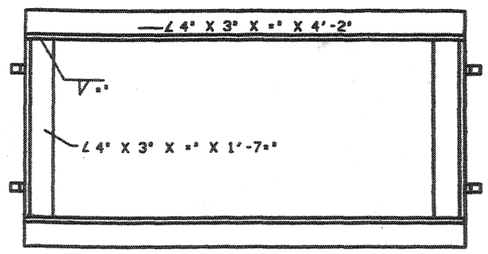

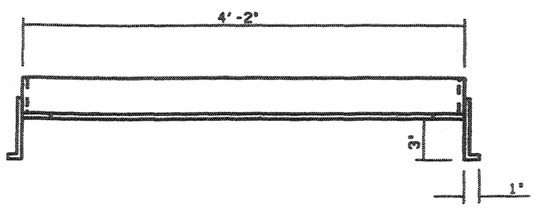

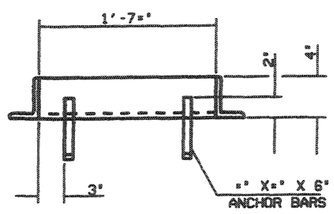

FRAME
FRAME WEIGHT: 68 LBS

NOTES:
1. HOT-DIP GALVANIZE GRATING AND FRAME AFTER FABRICATION IN ACCORDANCE WITH AASHTO DESIGNATION M 111 (ASTM A 123).
2. STRUCTURAL STEEL GRATING: USE STRUCTURAL CARBON STEEL CONFORMING TO AASHTO DESIGNATION M 270, GRADE 36 (ASTM A 709 GRADE 36).
3. SEE ROADWAY PLANS FOR TYPE OF GRATE REQUIRED.
4. ALL JOINTS REQUIRE " FILLET WELDS UNLESS NOTED OTHERWISE.

DESIGN DATA
MS 18 (HS-20) OR INTERSTATE ALTERNATE LOADING IN ACCORDANCE WITH CURRENT ASSHTO AND INTERIM SPECIFICATIONS.

STRUCTURAL STEEL: FS = 20,000 PSI

REVISIONS

NO.	DATE	APPR.	REMARKS

UTAH DEPARTMENT OF TRANSPORTATION
STANDARD DRAWINGS FOR ROAD AND BRIDGE CONSTRUCTION
SALT LAKE CITY, UTAH

RECOMMENDED FOR APPROVAL _____ JULY 03,2002 DATE
CHAIRMAN STANDARDS COMMITTEE
APPROVED _____ JULY 03,2002 DATE
DEPUTY DIRECTOR

RECTANGULAR GRATE & FRAME
STANDARD DRAWING TITLE

STD DWG
GF 3

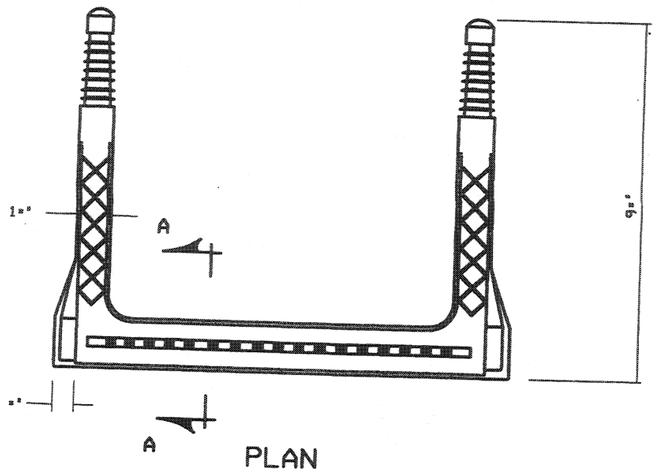

PLAN

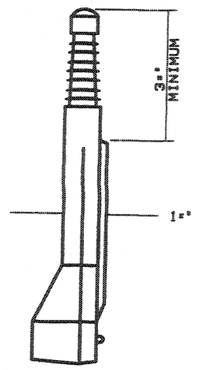

RIGHT SIDE VIEW

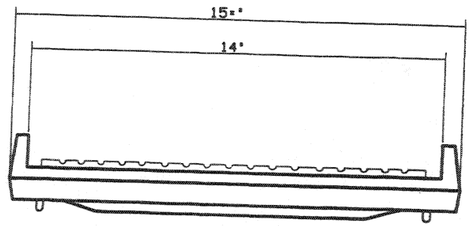

END VIEW

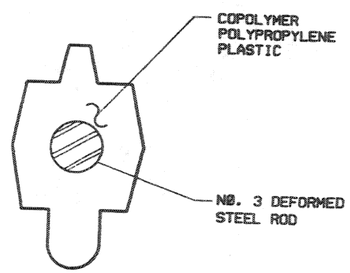

SECTION A-A

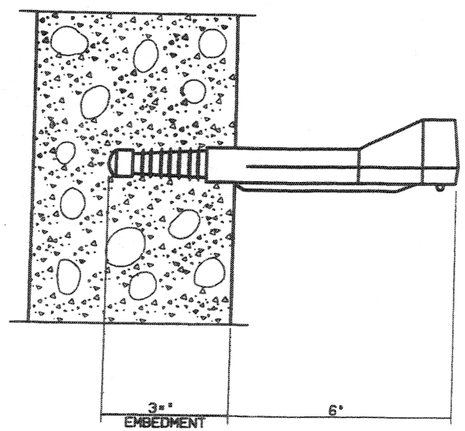

EMBEDMENT DETAIL

NOTES:

1. MANHOLE STEPS: CAPABLE OF WITHSTANDING A SINGLE CONCENTRATED LOAD OF 300 POUNDS APPLIED AT A DISTANCE OF 5 INCHES FROM THE FACE OF THE STRUCTURE WALL.
2. STEPS ARE TO BE VERTICALLY ALIGNED AND UNIFORMLY SPACED WITH A MINIMUM SPACING OF 12 INCHES AND A MAXIMUM SPACING OF 16 INCHES UNLESS SHOWN OTHERWISE ON STRUCTURE PLANS.
3. USE EITHER MANHOLE STEPS CAST-IN-PLACE, OR GROUTED INTO STRUCTURE WALL IN SUCH A MANNER AS TO PREVENT PULLOUT UNDER A LOAD OF 300 POUNDS APPLIED 5 INCHES FROM THE FACE OF THE STRUCTURE WALL.
4. STEEL REINFORCING OF MANHOLE STEPS: CONFORM TO AASHTO DESIGNATION M 31, GRADE 60, DEFORMED STEEL BAR. PLASTIC COATING OF MANHOLE STEPS: CONFORM TO ASTM DESIGNATION D 2146, TYPE II, GRADE 16906.
5. MANHOLE STEPS: CONFORM TO AASHTO DESIGNATION M 199 UNLESS NOTED OTHERWISE.
6. DIMENSIONS MAY VARY WITH MANUFACTURES DESIGN. USE ALTERNATIVE DESIGN WITH THE APPROVAL OF THE ENGINEER.

REVISIONS

NO.	DATE	APPR.	REMARKS

UTAH DEPARTMENT OF TRANSPORTATION
STANDARD DRAWINGS FOR ROAD AND BRIDGE CONSTRUCTION
SALT LAKE CITY, UTAH

RECOMMENDED FOR APPROVAL — JULY 03,2002 DATE

CHAIRMAN STANDARDS COMMITTEE APPROVED — JULY 03,2002 DATE

DEPUTY DIRECTOR

MANHOLE STEPS
STANDARD DRAWING TITLE

STD DWG
GF 6

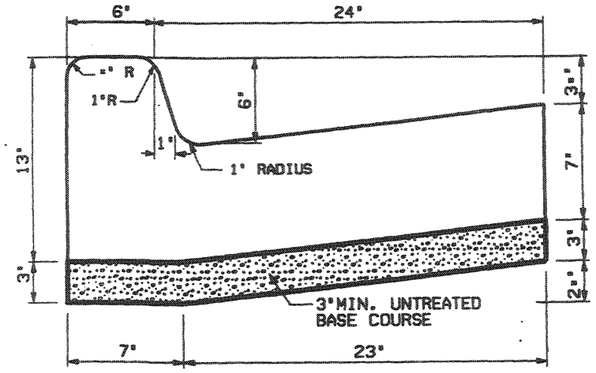

TYPE B1

CURB & GUTTER
AREA - 1.680 SQ.FT.

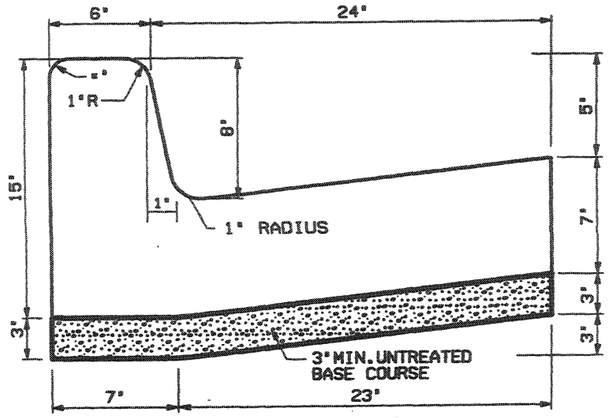

TYPE B2

CURB & GUTTER
AREA - 1.765 SQ.FT.

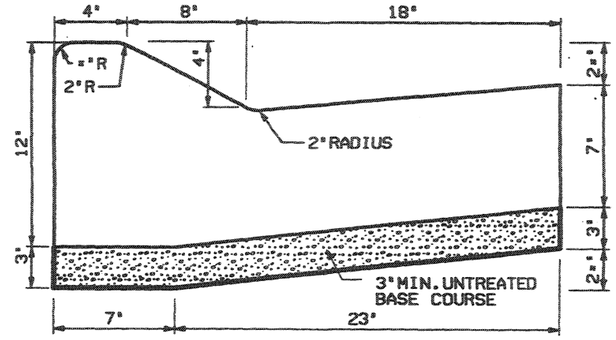

TYPE M1

CURB & GUTTER
AREA - 1.700 SQ.FT.

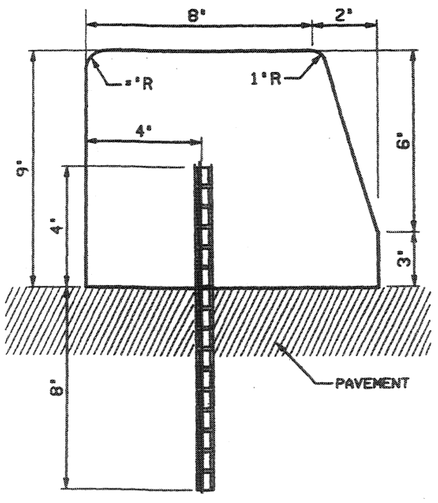

TYPE B3

CURB
AREA - 0.580 SQ.FT.

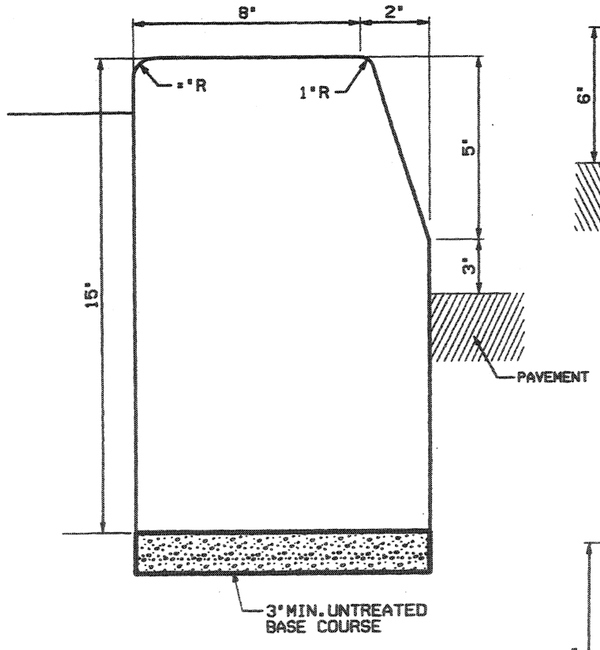

TYPE B4

CURB
AREA - 1.033 SQ.FT.

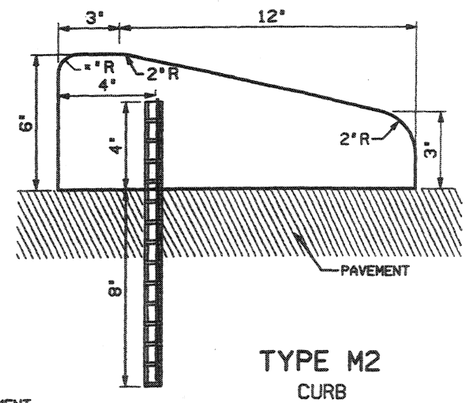

TYPE M2

CURB
AREA - 0.484 SQ.FT.

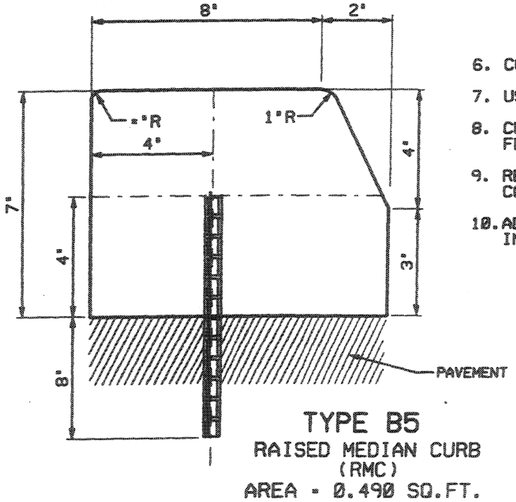

TYPE B5

RAISED MEDIAN CURB
(RMC)
AREA - 0.490 SQ.FT.

NOTES:

1. DRAINAGE CURBS: TYPE B1,B2 & M1
2. MOUNTABLE CURBS: TYPES M1 & M2 FOR APPLICATION REFER TO THE AASHTO POLICY ON GEOMETRIC DESIGN OF HIGHWAYS AND STREETS.
3. CURBS TYPES B1, B2, B3, B4 & B5 USED WITH DESIGN SPEED UP TO 40 MPH EXCEPT IN PREDOMINATELY URBAN OR RAPIDLY DEVELOPING RURAL AREAS WHERE CURB MAY BE USED WITH DESIGN SPEEDS UP TO 50 MPH.
4. DOWELS: =" DEFORMED BARS ON 5' MAX.CENTERS.
5. PRECAST CURBS:
   A. MINIMUM OF 10' IN LENGTH.
   B. DOWELS AT A MINIMUM OF 3 PER 10' LENGTH.
   C. INCLUDE ADEQUATE REINFORCING STEEL TO WITH STAND HANDLING STRESSES.
6. CONCRETE CLASS AA "AE"
7. USE TYPE B4 ONLY AS BORDER CURB.
8. CURB HEIGHT IS MEASURED VERTICALLY FROM THE FLOW LINE OF THE GUTTER TO TOP BACK OF CURB.
9. REFER TO ROADWAY PLANS FOR UNTREATED BASE COURSE SIZE.
10. ADJUST CURB FACE TO 4"MAXIMUM HEIGHT WHEN USED IN CONJUNCTION WITH GUARDRAIL BARRIER.

REVISIONS

NO.	DATE	APPR.	REMARKS
1	02/28/03	J.J.	REVISED NOTE 2, ADDED PAVEMENT LEADER TO TYPE B2, B3, AND B5.
2	04/24/03	J.L.	ADDED NOTE 10
3	06/18/03	F.M.	CORRECTED NOTE 3 ELIMINATING THE WORD "BARRIER"

UTAH DEPARTMENT OF TRANSPORTATION
STANDARD DRAWINGS FOR ROAD AND BRIDGE CONSTRUCTION
SALT LAKE CITY, UTAH

RECOMMENDED FOR APPROVAL — JUN.26.2003 DATE
CHAIRMAN STANDARDS COMMITTEE APPROVED — JUN.26.2003 DATE
DEPUTY DIRECTOR

CONCRETE CURB & GUTTER

STANDARD DRAWING TITLE

STD DWG
GW 2

DGN FILE: S:\NEED\STANDARD_DRAWINGS\IMPERIAL\APPROVED\GENERAL ROAD WORK (ONLY)\GW02.DGN

-2003

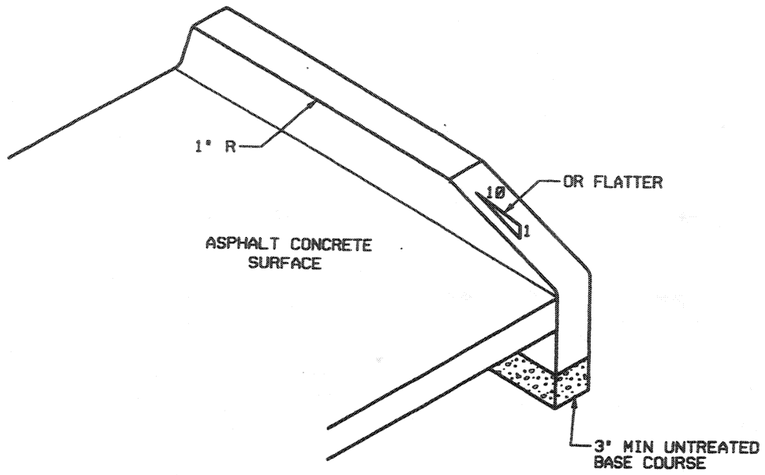

TYPICAL
CURB END DETAIL

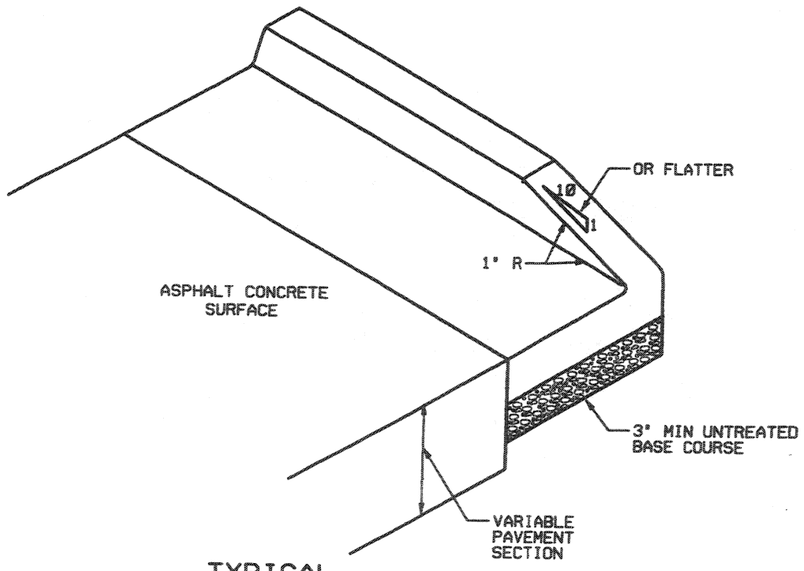

TYPICAL
CURB & GUTTER
END DETAIL

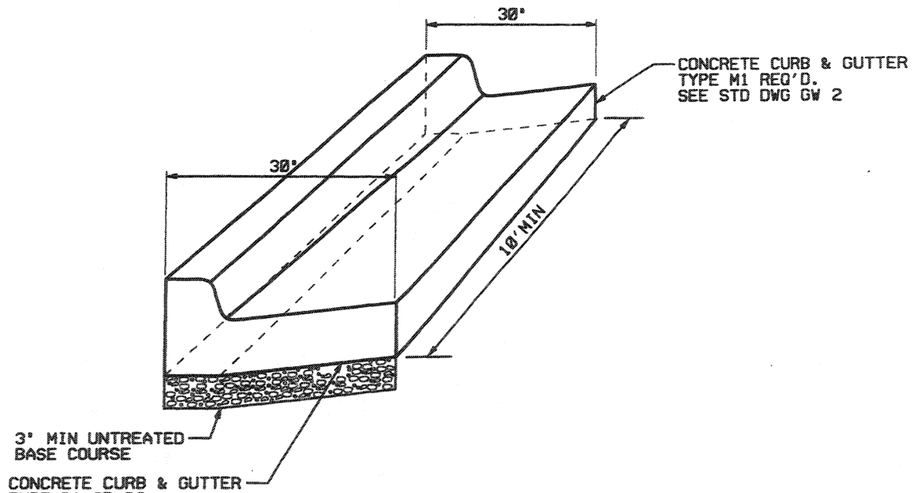

CURB & GUTTER
TRANSITION DETAIL

REVISIONS

NO.	DATE	APPR.	REMARKS

UTAH DEPARTMENT OF TRANSPORTATION
STANDARD DRAWINGS FOR ROAD AND BRIDGE CONSTRUCTION
SALT LAKE CITY, UTAH

RECOMMENDED FOR APPROVAL — JULY 03, 2002 — DATE

CHAIRMAN STANDARDS COMMITTEE
APPROVED — JULY 03, 2002 — DATE

DEPUTY DIRECTOR

CONCRETE
CURB & GUTTER
DETAILS

STANDARD DRAWING TITLE

STD DWG
GW 3

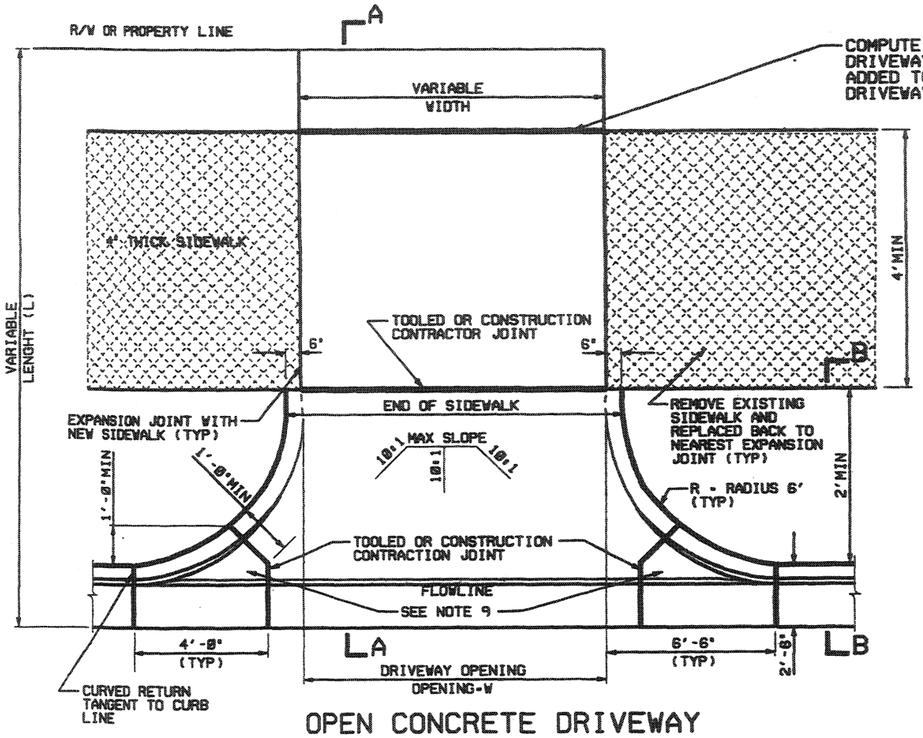

OPEN CONCRETE DRIVEWAY

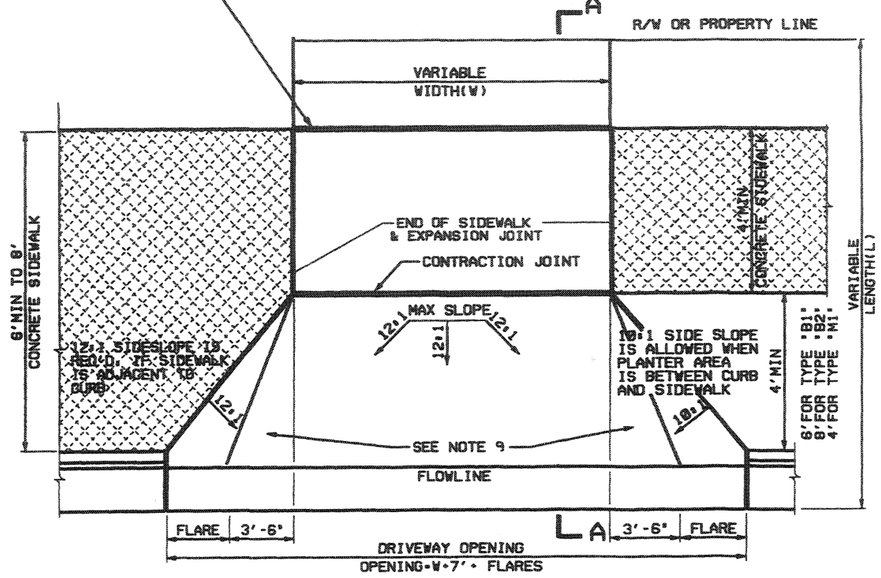

FLARED DRIVEWAY

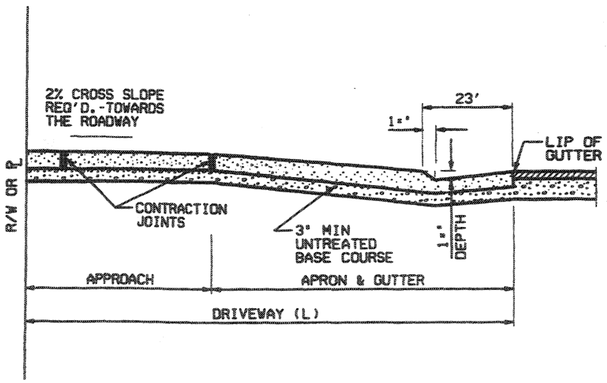

SECTION A-A

DRIVEWAY RADIUS AND FLARE AREA CHART			
OPEN CONCRETE DRIVEWAY	FT^2	FLARED DRIVEWAY	FT^2
6' RADIUS	44.13	12:1 FLARES	
		1- TYPE "B1" CURB & GUTTER	88.09
		2- TYPE "B2" CURB & GUTTER	129.92
		3- TYPE "M1" CURB & GUTTER	44.56
NOTE:			
FT2 QUANTITY - BOTH SIDES OF			
DRIVEWAY ROUNDED TO THE		10:1 FLARES	
NEAREST 0.5 FT^2		1- TYPE "B1" CURB & GUTTER	78.90
		2- TYPE "B2" CURB & GUTTER	115.39
		3- TYPE "M1" CURB & GUTTER	34.66

NOTES:

1. DRIVEWAY DIMENSIONS (MAX.& MIN.) ARE LOCATED IN U.D.O.T. 'MANUAL FOR THE ACCOMMODATION OF UTILITIES AND THE CONTROL AND PROTECTION OF STATE HIGHWAY RIGHTS OF WAY' CURRENT EDITION.
2. MAXIMUM DISTANCE BETWEEN TOOLED OR CONSTRUCTION JOINTS 10' LATERALLY AND LONGITUDINALLY SPACED EQUALLY.
3. PROVIDE EXPANSION JOINTS WHERE CONCRETE SIDEWALK BUTTS AGAINST CONCRETE DRIVEWAYS AND IN CONCRETE SIDEWALK AT 30 FEET INTERVALS.
4. DO NOT PAY FOR SIDEWALK INSIDE THE DRIVEWAY LIMITS (WIDTH AND LENGTH)
5. OPEN CONCRETE DRIVEWAY - FLARED DRIVEWAY
   A: RESIDENTIAL - 6 INCH THICK. COMMERCIAL - 7 INCH THICK
   B: EXTEND DRIVEWAY APPROACH TO R/W - PROPERTY LINE
   C: IF THE GRADES SHOWN ON THE SLOPE DETAIL CANNOT BE MET, DEPRESS THE LONGITUDINAL SLOPE OF THE SIDEWALK AT A RATE OF 5 PERCENT TO MEET THE APRON - APPROACH ELEVATION.
6. USE CLASS AA(AE) CONCRETE FOR SIDEWALK AND DRIVEWAYS
7. USE UNTREATED BASE COURSE UNDER ALL SIDEWALKS AND DRIVEWAYS.
8. 10:1 - 10% SLOPE; 12:1 - 8.33% SLOPE.
9. QUANTITIES FOR DRIVEWAYS INCLUDE RADIUS AND FLARES TO LIP OF GUTTER.

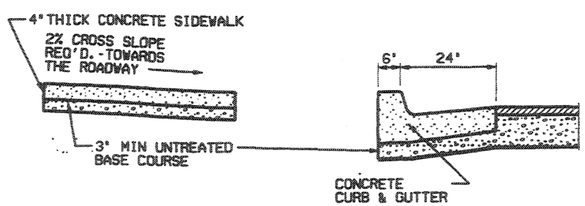

SECTION B-B

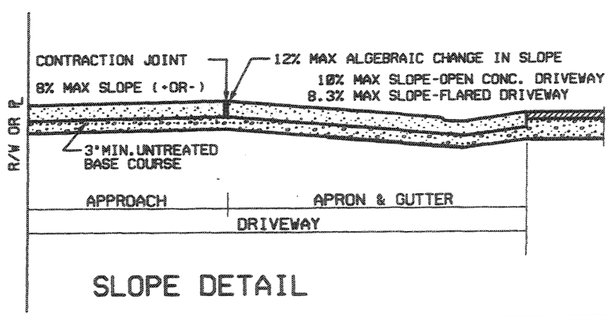

SLOPE DETAIL

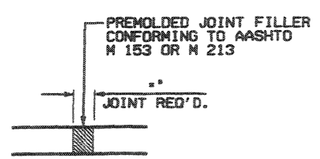

EXPANSION-CONTRACTION JOINT DETAIL

REVISIONS

NO.	DATE	APPR.	REMARKS

UTAH DEPARTMENT OF TRANSPORTATION
STANDARD DRAWINGS FOR ROAD AND BRIDGE CONSTRUCTION
SALT LAKE CITY, UTAH

RECOMMENDED FOR APPROVAL — JULY 03, 2002 DATE

CHAIRMAN STANDARDS COMMITTEE APPROVED — JULY 03, 2002 DATE

DEPUTY DIRECTOR

CONCRETE DRIVEWAYS & SIDEWALKS

STANDARD DRAWING TITLE

STD DWG
GW 4

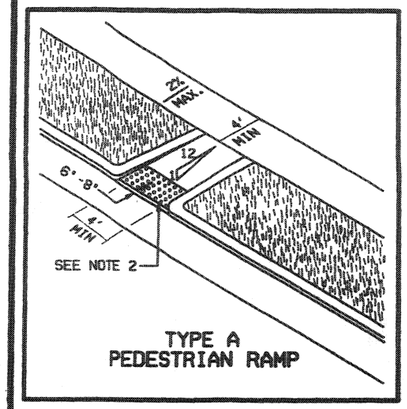

TYPE A
PEDESTRIAN RAMP

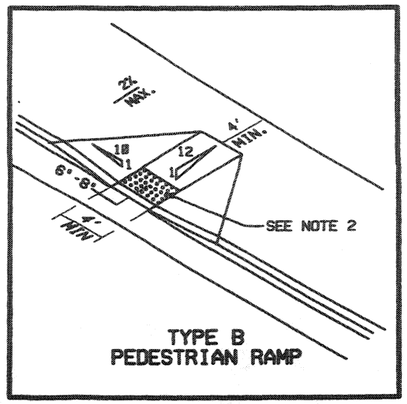

TYPE B
PEDESTRIAN RAMP

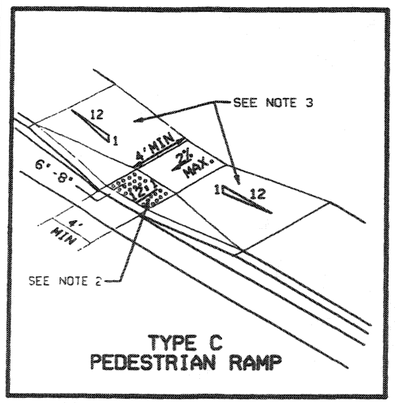

TYPE C
PEDESTRIAN RAMP

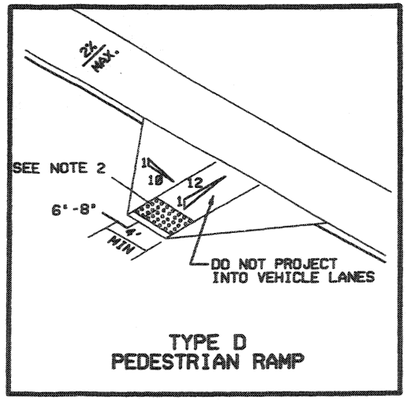

TYPE D
PEDESTRIAN RAMP

TYPE A - PEDESTRIAN RAMP
THE ENTIRE RAMP SLOPE IS ACHIEVED OUTSIDE THE SIDEWALK SECTION. A STEEP FACED CURB IS USED ALONG THE RAMP. THIS TYPE OF RAMP IS ALWAYS PREFERRED BECAUSE IT PROVIDES A CONSISTENT SIDEWALK SECTION FREE OF RAMP CROSS-SLOPES.

TYPE B - PEDESTRIAN RAMP
THE STEEPEST ALLOWABLE SLOPE OCCURS ALONG THE SIDEWALK AT 10:1. PROVIDE AT LEAST 4' OF SIDEWALK WIDTH BEYOND THE RAMP.

TYPE C - PEDESTRIAN RAMP
USE THIS TYPE OF RAMP WHEN THERE IS INSUFFICIENT WIDTH TO ACCOMMODATE TYPE B PEDESTRIAN RAMP. THE STEEPEST ALLOWABLE SLOPE OCCURS ALONG THE SIDEWALK AT 12:1. PROVIDE AT LEAST 4' X 4' SIDEWALK AT THE BASE OF THE RAMP.

TYPE D - PEDESTRIAN RAMP
DO NOT PROJECT THE BUILT-UP RAMP SECTION INTO TRAFFIC LANE.

TYPE E - PEDESTRIAN RAMP
USE THIS TYPE OF RAMP AT INTERSECTIONS WHEN CROSSWALK FACILITIES ARE PROVIDED.

TYPE F - PEDESTRIAN MEDIAN BREAK
USE THIS TYPE OF MEDIAN ACCESS WHEN CROSSWALK FACILITIES ARE PROVIDED.

FIGURE 1
ILLUSTRATES THE CROSS SECTION AND PROFILE VIEW OF TYPE C AND TYPE E PEDESTRIAN RAMPS. CONSTRUCT THE RAMP BASE SURFACE EVEN WITH THE PAVEMENT SURFACE AT THE FACE OF THE CURB.

NOTES:

1. PEDESTRIAN RAMPS TYPE A, B, C AND D ARE ACCEPTABLE FOR USE AT MID-BLOCK CROSSWALKS.
2. LOCATE DETECTABLE WARNINGS SO THAT THE EDGE NEAREST THE CURB LINE OR OTHER POTENTIAL HAZARD IS 6 TO 8 INCHES FROM THE CURB LINE OR OTHER POTENTIAL HAZARD. PROVIDE 2-FOOT MINIMUM DEPTH.

   SEE FIGURE 3 FOR TRUNCATED DOME SIZE AND SPACING DIMENSION DETAILS.
3. WARP SIDEWALK TO MATCH.
4. TYPE E DETECTABLE WARNING SIDE LIMITS: PROVIDE SCORED LINE TO ALIGN DIRECTLY WITH THE OUTER CROSSWALK MARKINGS.
5. PROVIDE ONE DESIGNATED 'VAN ACCESSIBLE' PARKING SPACE IN EVERY EIGHT ACCESSIBLE PARKING SPACES, BUT NOT LESS THAN ONE.
6. REFER TO THE MUTCD (LATEST EDITION) FOR RESERVED PARKING SIGNING FOR DISABLED PERSONS (R7-8).

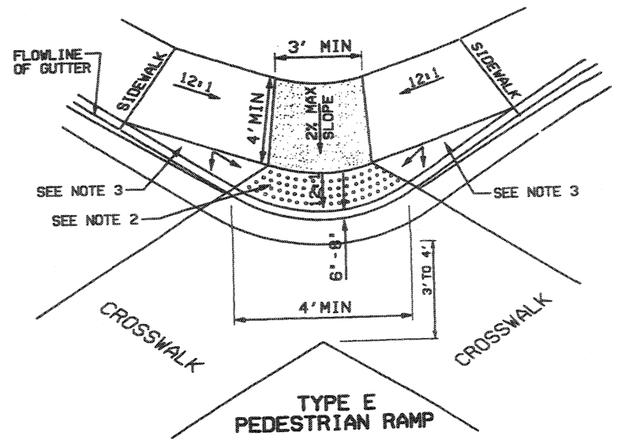

TYPE E
PEDESTRIAN RAMP

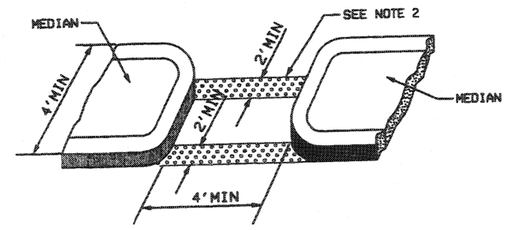

TYPE F
PEDESTRIAN MEDIAN BREAK

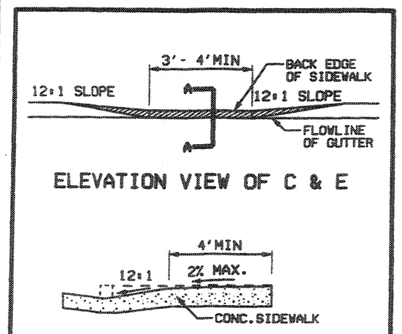

ELEVATION VIEW OF C & E

SECTION A-A
FIGURE 1

RESERVED ACCESSIBLE
PARKING SIGNING
SEE NOTE 6

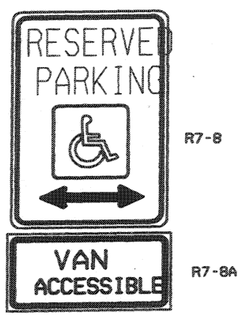

SIGNING FOR
"VAN ACCESSIBLE"
PARKING SPACES
SEE NOTE 5

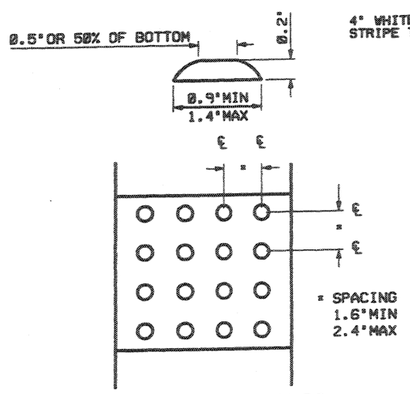

DETECTABLE WARNINGS
RAISED TURNCATED DOMES
FIGURE 3

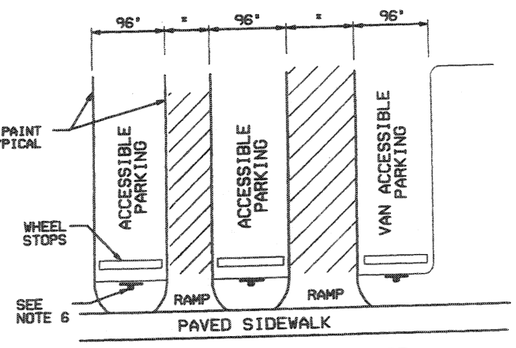

STRIPING DETAILS FOR
RESERVED ACCESSIBLE PARKING
FIGURE 2
= 60" MIN. FOR ACCESSIBLE PARKING
96" MIN. FOR VAN ACCESSIBLE PARKING

NO.	DATE	APPR.	REMARKS
1	12/05/02	L.M.	ADDED FIGURE 3
2	02/21/03	L.M.	REVISED TYPE E, FIGURE 2, FIGURE 3, SIGN FOR VAN ACCESSIBLE PARKING AND ADDED NOTE 4.

REVISIONS

UTAH DEPARTMENT OF TRANSPORTATION
STANDARD DRAWINGS FOR ROAD AND BRIDGE CONSTRUCTION
SALT LAKE CITY, UTAH

RECOMMENDED FOR APPROVAL — FEB. 27, 2003 DATE
CHAIRMAN STANDARDS COMMITTEE
APPROVED
DEPUTY DIRECTOR — FEB. 27, 2003 DATE

PEDESTRIAN ACCESS
STANDARD DRAWING TITLE

STD DWG
GW 5

DGN FILE: S:\VERSION_STANDARD_DRAWINGS\IMPERIAL\APPROVED\GENERAL ROAD WORK (GW)\GW05.DGN
15-OCT-2003

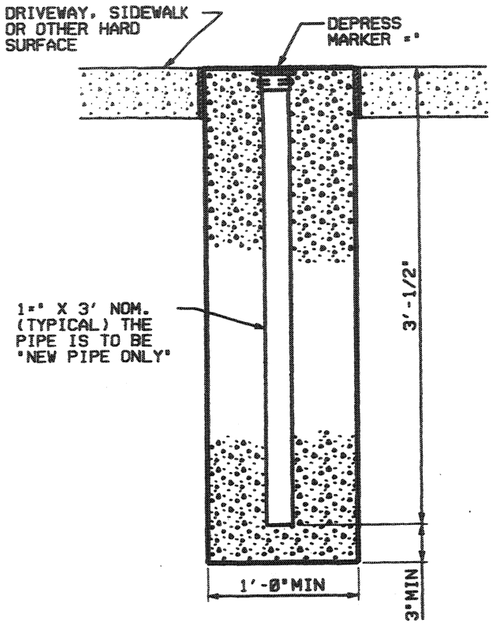

"A"

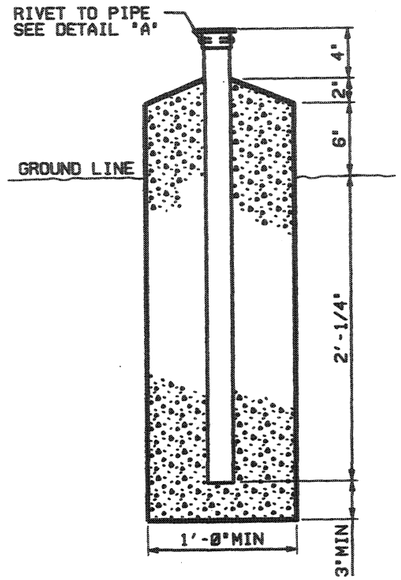

"B"

ALTERNATE INSTALLATIONS

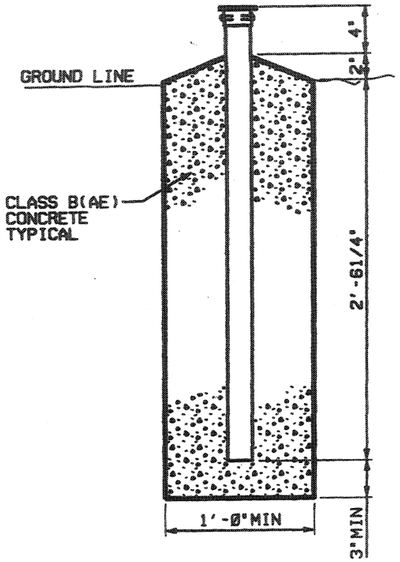

STANDARD INSTALLATION

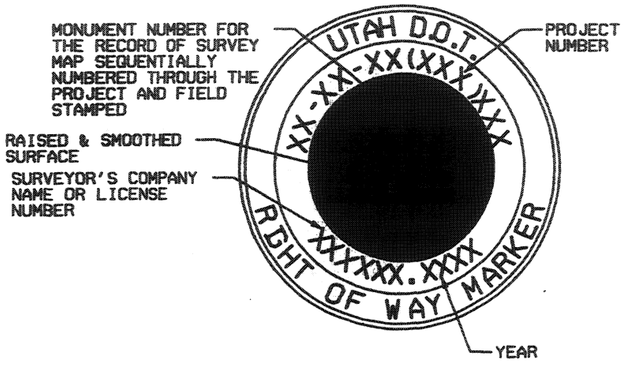

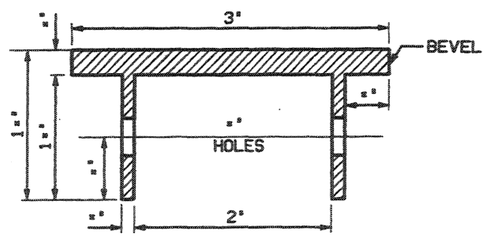

BRONZE CAP
DETAIL "A"

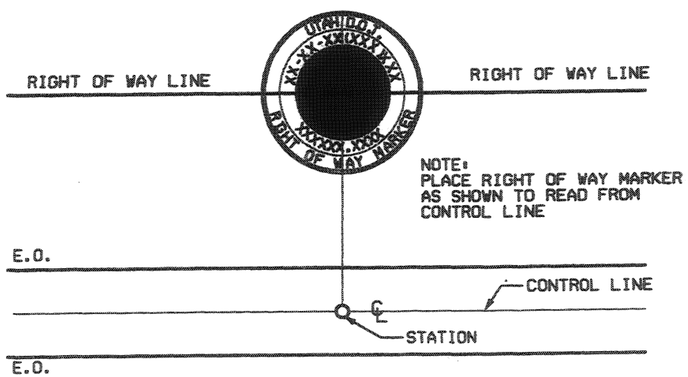

NOTES:

1. PLACE RIGHT OF WAY MARKERS AT EACH ANGLE POINT IN A RIGHT OF WAY LINE. PLACE RIGHT OF WAY MARKERS ON EACH RIGHT OF WAY LINE OPPOSITE THE PS, SC, CS AND ST OR OPPOSITE THE PC AND PT. WHERE THE RIGHT OF WAY PARALLELS THE CENTER LINE OF THE HIGHWAY AROUND A CURVE.
2. PLACE RIGHT OF WAY MARKERS IN ADDITION SO THAT NO INTERVAL WILL EXCEED 1000'. PLACE INTERMEDIATE MARKERS PREFERABLY ON SECTION LINES OR INTERSECTING PROPERTY LINES.
3. GRIND TO A SMOOTH SURFACE ALL EXPOSED SURFACES OF THE BRONZE CAP.
4. DEPRESS ALL LETTERS MINIMUM OF ='.
5. USE =" HIGH LETTERS AND FIGURES.
6. USE ALTERNATE "A" INSTALLATION WHEN PLACING TOP OF BRONZE CAP FLUSH WITH HARD SURFACE AREA'
7. USE ALTERNATE "B" INSTALLATION WHEN PLACING MARKERS IN HEAVY BRUSH OR FOREST LANDS
8. ON THE RECORD OF SURVEY MAP SHOW THE STATION, OFFSET, PROJECT COORDINATES AND ELEVATION..

REVISIONS

NO.	DATE	APPR.	REMARKS

UTAH DEPARTMENT OF TRANSPORTATION
STANDARD DRAWINGS FOR ROAD AND BRIDGE CONSTRUCTION
SALT LAKE CITY, UTAH

RECOMMENDED FOR APPROVAL — JULY 03,2002 DATE

CHAIRMAN STANDARDS COMMITTEE APPROVED — JULY 03,2002 DATE

DEPUTY DIRECTOR

STANDARD DRAWING TITLE
RIGHT OF WAY MARKER

STD DWG
GW 6

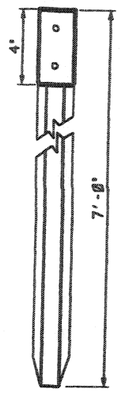

TYPE I

SINGLE UNIT

(OF COLOR SPECIFIED)

SEE NOTE 1

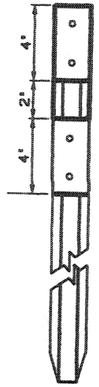

TYPE II

DOUBLE UNIT

SEE NOTE 1

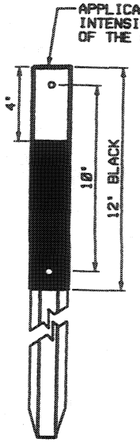

CULVERT MARKER

SEE NOTE 2

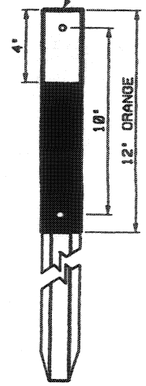

MAINTENANCE MARKER

SEE NOTE 2

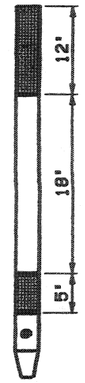

FREEWAY CROSSOVER MARKER

SEE NOTE 9

NOTES:

1. USE GALVANIZED STEEL POSTS FABRICATED WITH ⌀" HOLES ON 1" SPACING. PUNCH HOLES ON THE CENTERLINE OF THE POST. PLACE TOP HOLE 1" FROM THE TOP OF POST. PUNCH HOLES THE FULL LENGTH OF THE POST.
2. PAINT THE SPECIFIED COLOR OR ATTACH 3" X 12" X 1/10" COLORED PLASTIC ON CULVERT AND MAINTENANCE MARKERS. USE BLACK ABOVE ORANGE WHEN BOTH MARKERS (MAINTENANCE AND CULVERT) ARE REQUIRED ON ONE DELINEATOR.
3. MOUNT BARRIER REFLECTORS ON CONCRETE AND BRIDGE PARAPETS WITH TWO ⌀" X ⌀" METAL HIT ANCHORS.
4. MOUNT BARRIER REFLECTORS ON CONCRETE BARRIER AS SHOWN ON STD DWG BA 2A.
5. MOUNT STRAIGHT REFLECTORS ON WOOD POSTS WITH TWO 2⌀" ELECTRO GALVANIZED RING SHANK NAILS WITH NEOPRENE WASHERS.
6. MOUNT STRAIGHT REFLECTORS ON STEEL POSTS WITH TWO ⌀" X ⌀" BOLTS AND SELF LOCKING NUTS.
7. MOUNT BARRIER REFLECTORS ON GUARDRAIL POSTS AS SHOWN ON STD DWG BA 4A.
8. INSTALL DELINEATOR PLATE ON THE SIDE OF THE POST FACING TRAFFIC. PREFERRED ORIENTATION OF POST TO ONCOMING TRAFFIC IS AS SHOWN. HOWEVER, EXISTING POST WITH THE OPPOSITE ORIENTATION IS ACCEPTABLE. INSTALL ON OPEN FACE SIDE WITH TWO ⌀" DIAMETER EXPANSION RIVETS (GRIP RANGE 1⌀" TO 1⌀"). INSTALL ON OPPOSITE SIDE WITH TWO ⌀" POP RIVETS WITH BACKING WASHERS.
9. REFER TO STD DWG ST 2 FOR FREEWAY CROSSOVER DELINEATION MARKINGS AND HARDWARE.

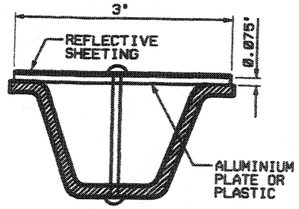

DELINEATOR INSTALLATION

SEE NOTE 8

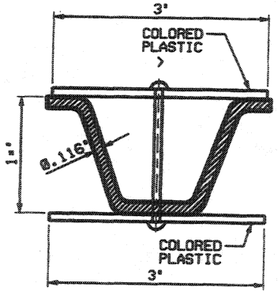

CULVERT/MAINTENANCE MARKER INSTALLATION

FOR 2 LB/FT POST WITH COLORED PLASTIC ATTACHED. SEE NOTE 2.

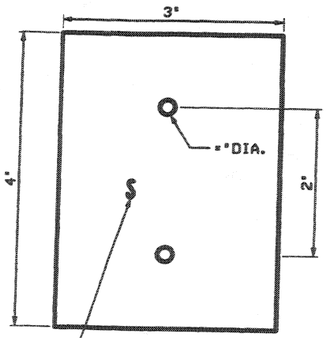

DELINEATOR PLATE

SEE NOTE 8

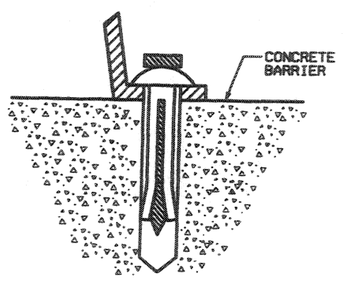

METAL HIT ANCHORS

SEE NOTE 3

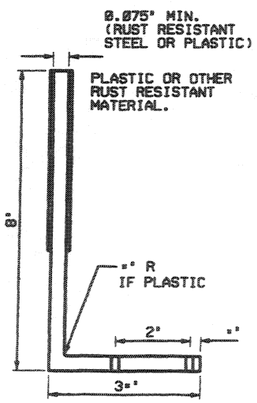

"L" REFLECTOR

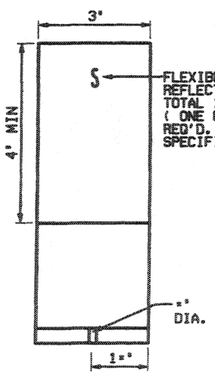

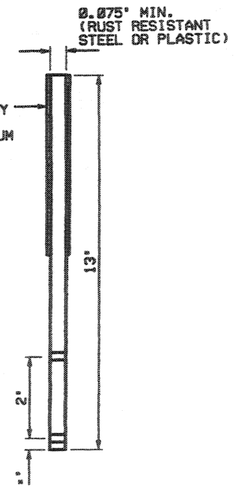

BARRIER REFLECTORS

SEE NOTES 3, 4, 5, 6, 7

STRAIGHT REFLECTOR

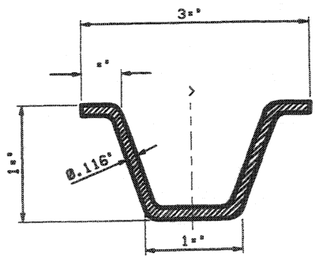

CROSS SECTION

FOR 2 LB/FT POST

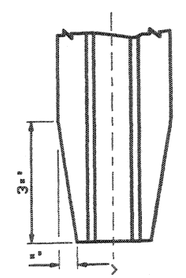

POST TAPER DETAIL

NO.	DATE	APPR.	REVISIONS
1	08/14/03	J.	CORRECTED NAME OF FREEWAY CROSSOVER MARKER

REMARKS

UTAH DEPARTMENT OF TRANSPORTATION

STANDARD DRAWINGS FOR ROAD AND BRIDGE CONSTRUCTION

SALT LAKE CITY, UTAH

RECOMMENDED FOR APPROVAL

AUG. 29, 2003
DATE

CHAIRMAN STANDARDS COMMITTEE

APPROVED

AUG. 29, 2003
DATE

DEPUTY DIRECTOR

DELINEATION HARDWARE

STANDARD DRAWING TITLE

STD DWG

GW 9

DGN FILE: S:\ESD\STANDARD_DRAWINGS\IMPERIAL\APPROVED\GENERAL ROAD WORK (DH\GWDH.DGN

15-OCT-2003

ACCELERATION LANE

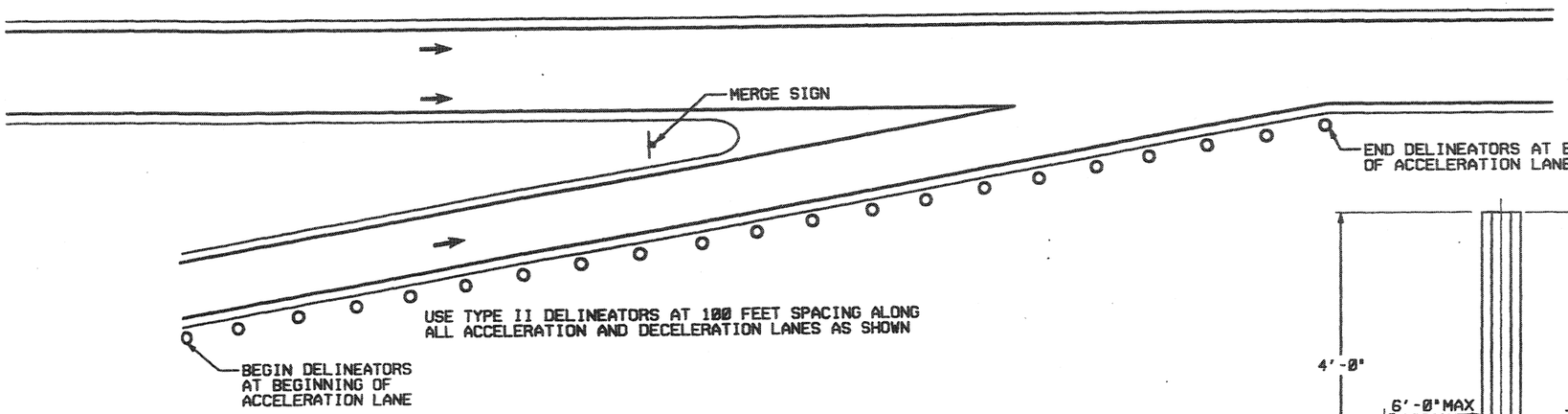

DECELERATION LANE

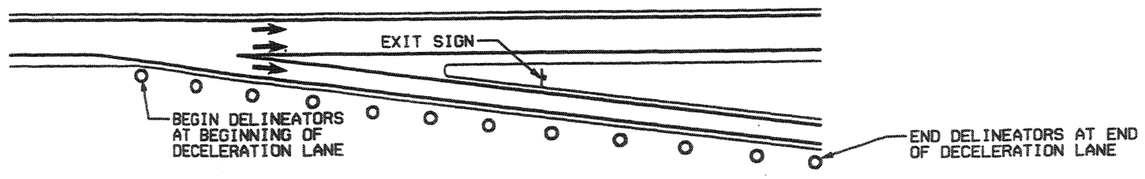

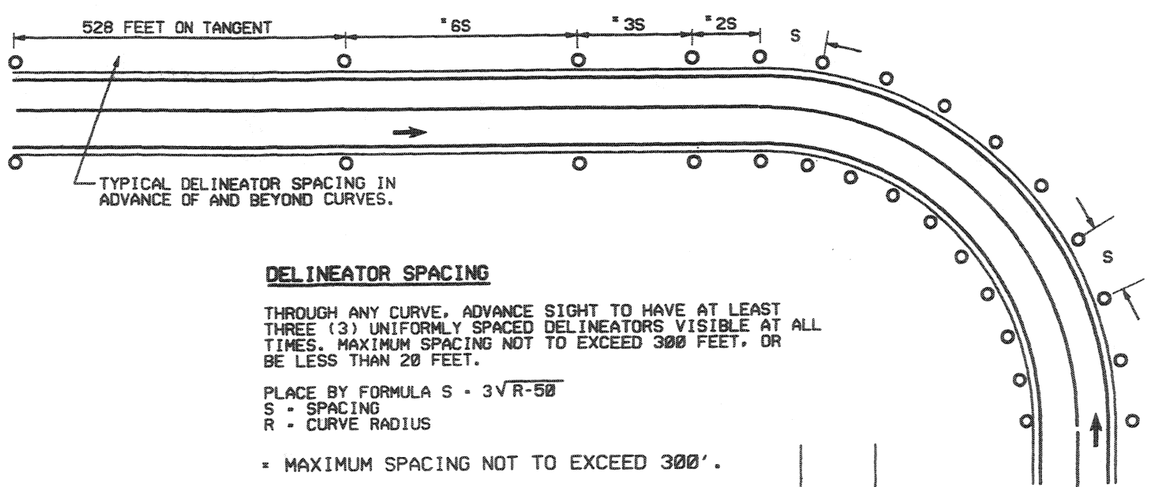

DELINEATOR SPACING

THROUGH ANY CURVE, ADVANCE SIGHT TO HAVE AT LEAST THREE (3) UNIFORMLY SPACED DELINEATORS VISIBLE AT ALL TIMES. MAXIMUM SPACING NOT TO EXCEED 300 FEET, OR BE LESS THAN 20 FEET.

PLACE BY FORMULA $S = 3\sqrt{R-50}$
S = SPACING
R = CURVE RADIUS

* MAXIMUM SPACING NOT TO EXCEED 300'.

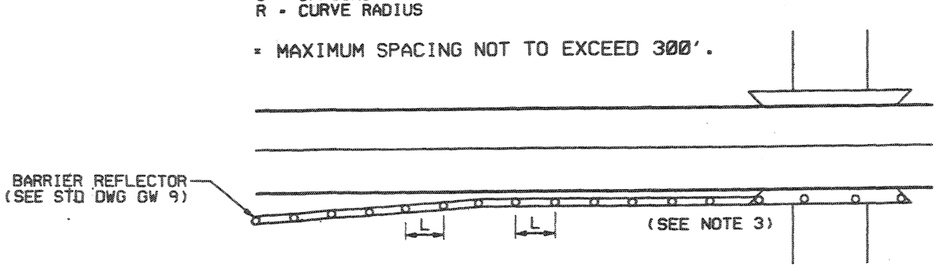

BARRIER REFLECTOR DETAIL
(SEE NOTE 2)

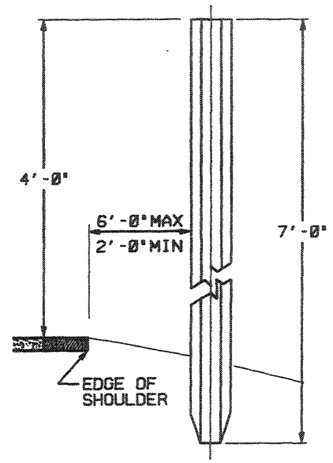

DELINEATOR

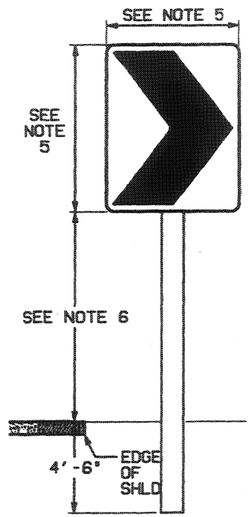

CHEVRON ALIGNMENT SIGN

NOTES:

1. BARRIERS ARE DEFINED AS BEING GUARDRAIL, CONCRETE BARRIER & BRIDGE PARAPET WALL.
2. MOUNT BARRIER REFLECTORS ON ENTIRE LENGTH OF BARRIER AS PER BARRIER TYPE STANDARD.

   USE REFLECTOR SPACING (L) OF 50 FEET IN PERMANENT LOCATIONS, AND 25 FEET FOR TEMPORARY SITUATIONS.

   USE REFLECTOR COLOR TO MATCH THE ADJACENT PAINT STRIPE.
3. IF GUARDRAIL IS NOT ATTACHED TO PARRAPET, INSTALL APPROPRIATE OBJECT MARKER OM-3R (OR L OR C) IN PLACE OF DELINEATOR AT LEADING EDGE OF BRIDGE PARAPET.
4. CHEVRON ALIGNMENT (W1-8) SIGNS MAY BE USED WHEN ADDITIONAL EMPHASIS AND GUIDANCE FOR A CHANGE IN HORIZONTAL ALIGNMENT IS NEEDED. THE W1-8 SIGN MAY BE USED TO SUPPLEMENT STANDARD DELINEATORS ON CURVES. THE W1-8 SIGN MAY BE USED TO SUPPLEMENT OR AS AN ALTERNATE TO THE LARGE ARROW (W1-6) SIGN.

   WHEN USED, INSTALL THE W1-8 SIGNS ON THE OUTSIDE OF A TURN OR CURVE, IN LINE WITH, AND AT APPROXIMATELY A RIGHT ANGLE TO APPROACHING TRAFFIC.

   THE W1-8 SIGN SHOULD BE VISIBLE FOR A SUFFICIENT DISTANCE TO PROVIDE THE ROAD USER WITH ADEQUATE TIME TO REACT TO THE CHANGE IN ALIGNMENT. SPACE THE SIGNS SUCH THAT THE ROAD USER ALWAYS HAS AT LEAST TWO SIGNS IN THEIR VIEW UNTIL THE CHANGE OF ALIGNMENT ELIMINATES THE NEED FOR A SIGN.
5. USE W1-8 SIGN SIZE AS FOLLOWS:

   A) FOR CONVENTIONAL ROADS USE 24" X 30".
   B) FOR EXPRESSWAYS USE 30"X 36".
   C) FOR FREEWAYS USE 36" X 48".
6. USE 7' MIN, 7'6" MAX MOUNTING HEIGHT ON INTERSTATE, EXPRESSWAY, AND URBAN AREAS. USE 5' MIN, 7'6" MAX IN RURAL AREAS.
7. USE CONSISTENT MOUNTING HEIGHT AT EACH LOCATION.

REVISIONS				
NO.	DATE	APPR.	REMARKS	
1	08/28/03	J.J.	REVISED ENTIRE DRAWING	

UTAH DEPARTMENT OF TRANSPORTATION
STANDARD DRAWINGS FOR ROAD AND BRIDGE CONSTRUCTION
SALT LAKE CITY, UTAH

RECOMMENDED FOR APPROVAL — AUG.28, 2003 DATE

CHAIRMAN STANDARDS COMMITTEE APPROVED — AUG.28, 2003 DATE

DEPUTY DIRECTOR

STANDARD DRAWING TITLE

DELINEATION APPLICATION

STD DWG
GW 10

DGN FILE: S:\ENGR\STANDARD_DRAWINGS\IMPERIAL\APPROVED\GENERAL ROAD WORK (GW)\GW10.DGN

T-2003

PAVEMENT / APPROACH SLAB DETAILS

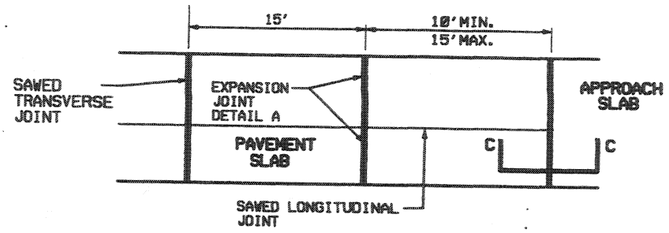

NORMAL APPROACH SLAB

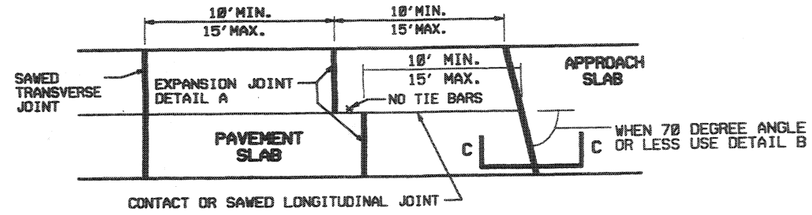

SKEWED APPROACH SLAB

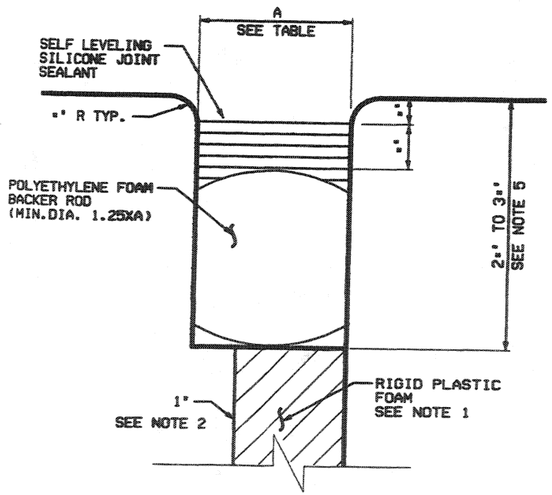

DETAIL "D"

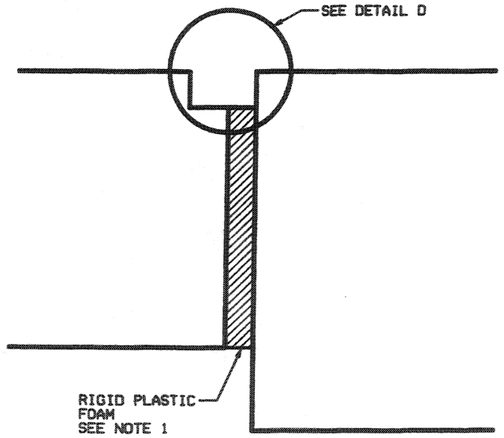

SECTION C-C

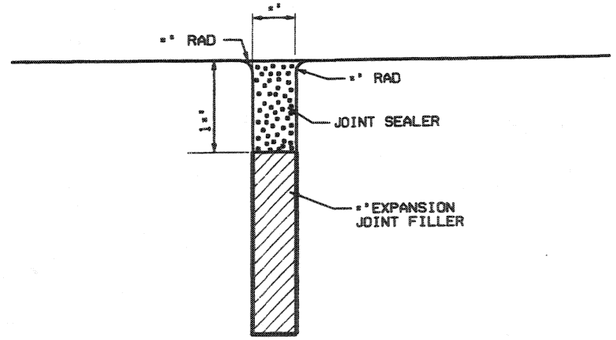

DETAIL "A"
(EXPANSION JTS.)

NOTES:

1. USE CLOSED CELL,RIGID PLASTIC FOAM. CUT RIGID PLASTIC FOAM TO CONFORM TO THE CROSS SECTION OF THE PAVEMENT AND FURNISH IN STRIPS EQUAL TO THE WIDTH OF THE PAVEMENT SLAB. MAKE THE TOP SURFACE SMOOTH. PROVIDE A SNUG FIT WITHOUT LOSS IN THICKNESS OF THE MATERIAL.
2. FOR BRIDGES GREATER THAN 250 FEET LENGTH, USE 1=" FOR TEMPERATURES LESS THAN 50°F. AT TIME OF ROADWAY PAVING.
3. DO NOT INSTALL JOINT SEALANT ABOVE 90°F. OR BELOW 50°F.
4. FOR STEPPED END APPROACH SLABS, APPLY DETAIL D ALONG LONGITUDINAL EDGES OF STEP. HOWEVER, DO NOT PLACE DOWELS ALONG LONGITUDINAL EDGES.
5. DEPTH TO BE DETERMINED BY CONTRACTOR BASE ON ACTUAL COMPRESSED BACKER ROD HEIGHT.

APPROACH SLAB JOINT WIDTH (INCH)

TEMPERATURE (DEG F)	DIMENSION A (FOR BRIDGES GREATER THAN 250' LENGHT)	DIMENSION A (FOR ALL OTHER BRIDGES)
90	1=	1=
60	1=	1=
35	2	1=

SEE NOTE 3

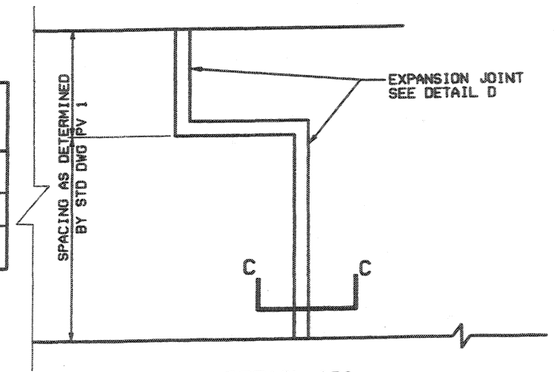

DETAIL "B"
TYPICAL EACH SLAB

REVISIONS

NO.	DATE	APPR.	REMARKS
1	09/25/02	B.N.	DELETED NOTES 1 & 3 REVISED NOTE 1 AND CORRECTED TABL

UTAH DEPARTMENT OF TRANSPORTATION
STANDARD DRAWINGS FOR ROAD AND BRIDGE CONSTRUCTION
SALT LAKE CITY, UTAH

RECOMMENDED FOR APPROVAL — DEC.19.2002 DATE

CHAIRMAN STANDARDS COMMITTEE APPROVED — DEC.19.2002 DATE

DEPUTY DIRECTOR

PAVEMENT/APPROACH SLAB DETAILS

STANDARD DRAWING TITLE

STD DWG
PV 2

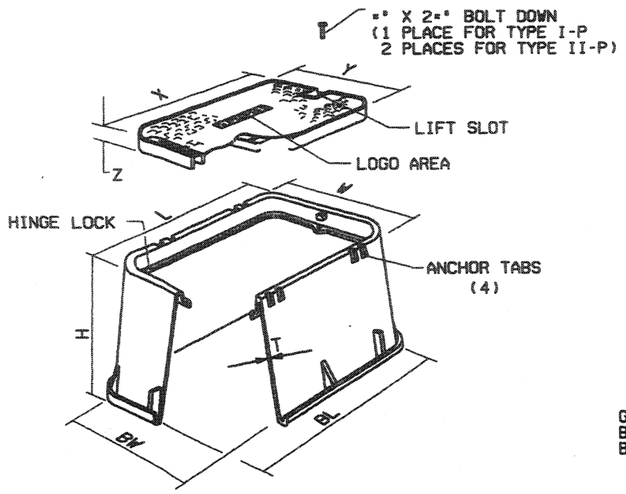

PLASTIC JUNCTION BOX

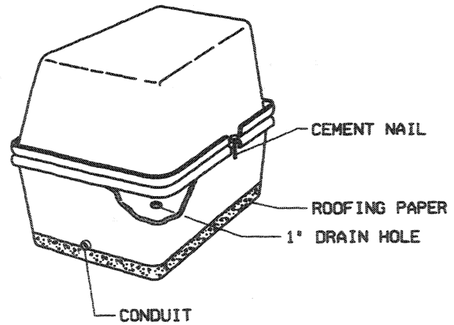

BOX AND LID DIMENSIONS

(INCHES)

BOX TYPE	L	W	H	BL	BW	T	X	Y	Z
I-P	17	11=*	12	19=*	14	=*	15=*	10=*	1=*
II-P	25=*	16	15	29=*	20	=*	23=*	13=*	2

NOTES: ALL DIMENSIONS LISTED ARE MINIMUM.

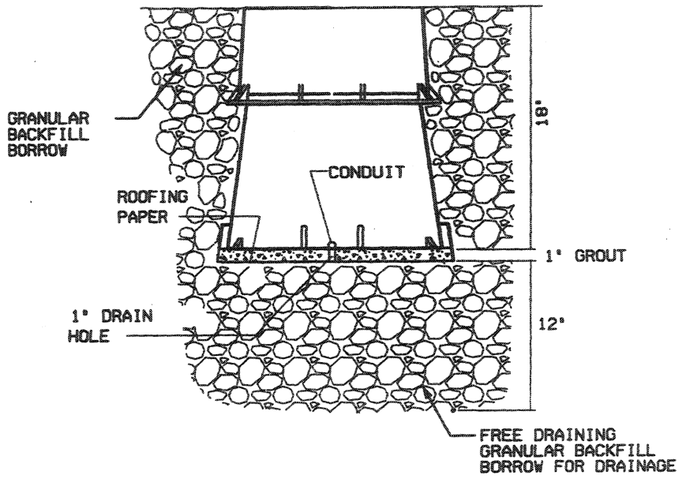

JUNCTION BOX AND EXTENSION TYPE I-P

NOTES:

1. PROVIDE SEALING COMPOUND ON ENDS OF EACH CONDUIT RUN.
2. OTHER JUNCTION BOXES ACCEPTABLE SUBJECT TO APPROVAL BY THE ENGINEER.
3. USE GRANULAR BACKFILL WELL TAMPED AROUND JUNCTION BOXES.
4. CAST CONDUIT HOLES IN JUNCTION BOX AT THE TIME OF PRECASTING OR DRILL AT THE TIME OF PLACEMENT WITH NO STRUCTURAL DAMAGE TO BOX. DIAMETER OF ALL DRILLED HOLES THE SAME AS OUTSIDE DIAMETER OF CONDUIT.
5. PLACE TOP OF THE JUNCTION BOX WITH SURROUNDING GRADE OR CONCRETE FLATWORK EXCEPT AS DIRECTED WHEN AREA IS SUBJECT TO WHEEL LOAD. IF WHEEL LOAD IS ANTICIPATED. COVER THE JUNCTION BOX WITH A STEEL PLATE OVERLAPPING THE JUNCTION BOX BY A MINIMUM OF 1=* ON ALL SIDES AND A MINIMUM OF 4" LAYER OF ASPHALT.
6. REFER TO STD DWG AT 7 FOR POLYMER CONCRETE JUNCTION BOX.

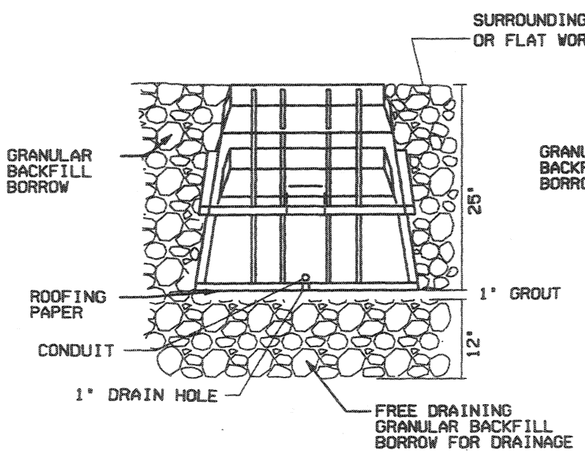

DOUBLE JUNCTION BOX TYPE II-P

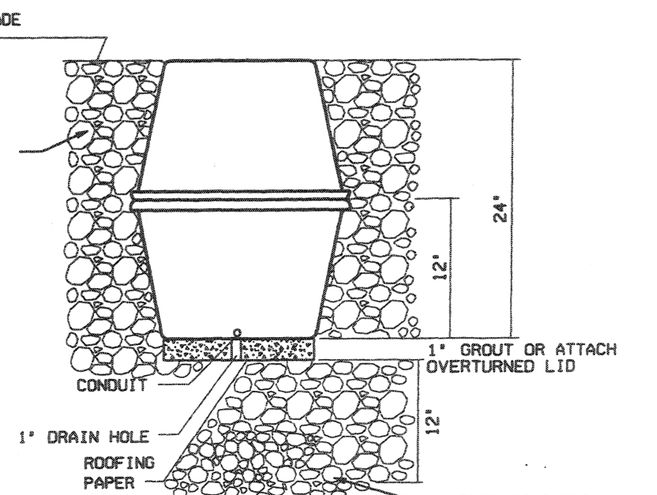

DOUBLE JUNCTION BOX TYPE I-P

REVISIONS

NO.	DATE	APPR.	REMARKS

UTAH DEPARTMENT OF TRANSPORTATION
STANDARD DRAWINGS FOR ROAD AND BRIDGE CONSTRUCTION
SALT LAKE CITY, UTAH

RECOMMENDED FOR APPROVAL — JULY 03.2002 DATE

CHAIRMAN STANDARDS COMMITTEE APPROVED — JULY 03.2002 DATE

DEPUTY DIRECTOR

JUNCTION BOX DETAILS

STANDARD DRAWING TITLE

STD DWG
SL 12

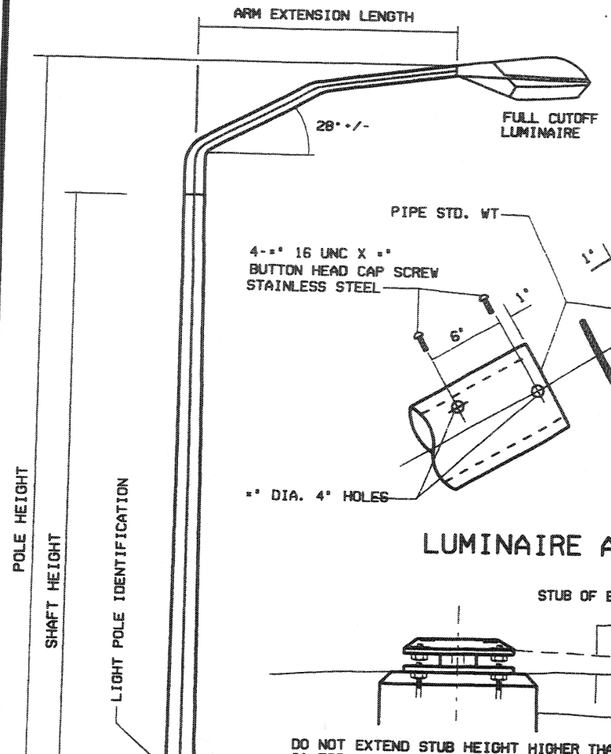

BREAKAWAY SUPPORT STUB HEIGHT MEASUREMENT

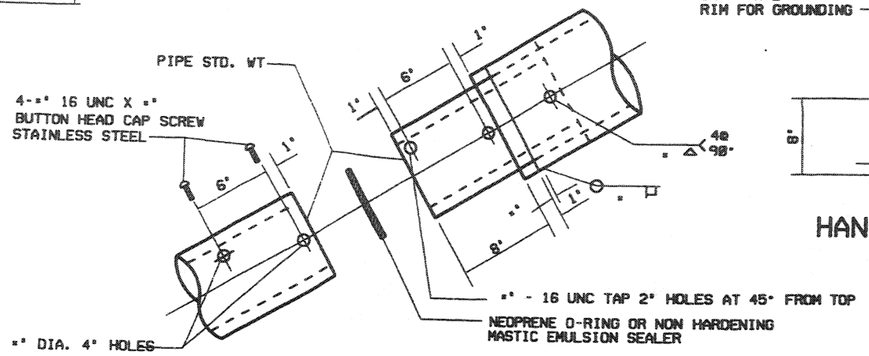

LUMINAIRE ARM CONNECTION

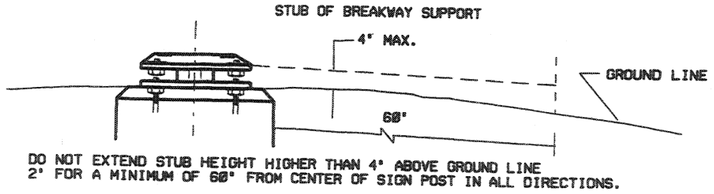

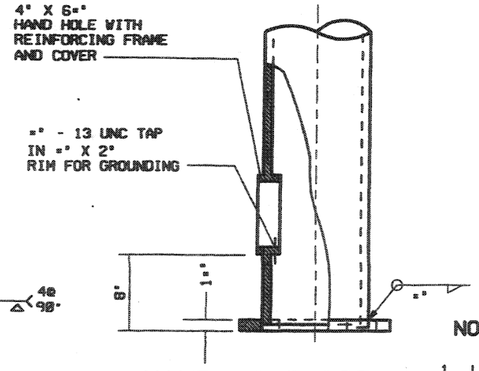

HAND HOLE DETAIL

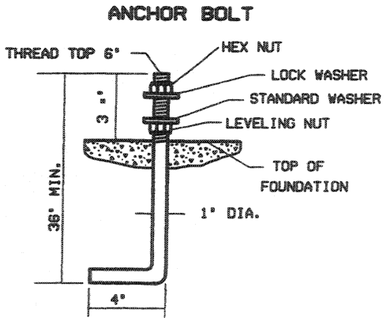

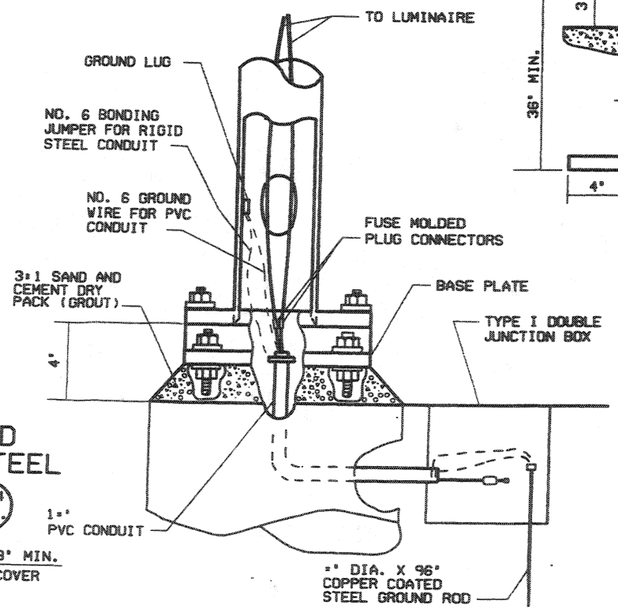

TYPICAL LIGHT POLE CONECTIONS

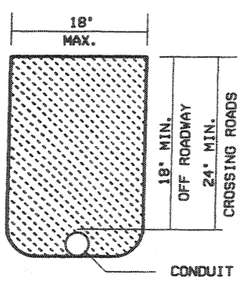

TRENCHING DETAIL

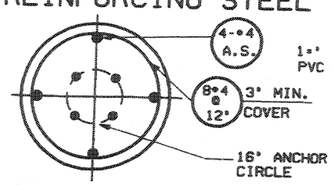

SECTION A-A

SHAFT HEIGHT	POLE HEIGHT	ARM EXTENSION DIMENTIONS		MIN. SHAFT BOTTOM O.D.	MIN. SHAFT TOP O.D.	MIN. WALL THICKNESS	MAX. SHAFT TOP DEFLECTION
		LENGTH	END DIA.				
28'-0"	31'-0"	6'-0"	2½"	7½"	4"	11⁄16"	4-1/2"
	32'-0"	10'-0"	2½"	7½"	4"	11⁄16"	4-1/2"
38'-0"	41'-0"	6'-0"	2½"	9½"	4"	11⁄16"	6"
	42'-0"	10'-0"	2½"	9½"	4"	11⁄16"	6"

NOTES:

1. LIGHT POLE ASSEMBLY:
   LIGHT POLE ASSEMBLY CONSIST OF A POLE, ARM, BASE, INTERNAL CONDUCTORS, IDENTIFICATION, SPLICES, MOLDED CONNECTORS, FUSES, ANCHOR BOLTS, HARDWARE AND BREAK-AWAY BASE OR ANCHOR BASE.

2. LIGHT POLE:
   A-PROVIDE ASTM A 570 GRADE 33 GALVANIZED IN ACCORDANCE WITH ASTM A 123 FOR LIGHT POLE AND TAPERED STEEL POLES. OTHER LIGHT POLE MATERIALS ACCEPTABLE SUBJECT TO THE APPROVAL OF DESIGN AND DRAWINGS PRIOR TO THE OPENING OF BIDS. SHOP DRAWINGS REQUIRED.
   B-USE THE SAME LIGHT POLE AND MAST ARM MATERIAL THROUGHOUT THE PROJECT MEETING THE REQUIREMENTS OF AASHTO SPECIFICATION FOR STRUCTURAL SUPPORT FOR HIGHWAY SIGN, LUMINARIES AND TRAFFIC SIGNALS FOR AN 80 MPH WIND WITH 104 MPH GUST.
   ALLOWABLE STRESSES: ASTM A 570 GRADE 33 - FB-21.78 KSI (.66 FY)
   FV-10.89 KSI (.33 FY)
   (INCREASE 40% FOR GROUP II AND III LOADING)
   C-PROVIDE COMPATIBLE ARM EXTENSION CONNECTIONS, COMPONENTS AND DETAILS WITH THE TYPE OF POLE UTILIZED.
   D-FURNISH LIGHT POLE BASE PLATE TO MATCH EXISTING BOLT CIRCLE WHEN POLE IS LOCATED ON STRUCTURE.
   E-DESIGN LIGHT POLE FOR A LUMINAIRE WEIGHT OF 75 LBS AND A PROJECTED AREA OF 3.3 SQ.FEET.
   F-ORIENT ALL ARM EXTENSIONS AT RIGHT ANGLES TO THE SURVEY LINE OF ROADWAY.
   G-OFFSET IS DEFINED AS THE DISTANCE FROM THE EDGE OF TRAVELED WAY TO THE SHAFT CENTER OF LIGHT POLE.
   H-CENTER SHAFT TOP OVER CENTER OF FOUNDATION AFTER ARM EXTENSION, LUMINAIRE AND ALL ELECTRICAL ACCESSORIES ARE IN PLACE.
   J-MAXIMUM ALLOWABLE DEFLECTION AT SHAFT TOP IS BASED ON 100 POUNDS. HORIZONTAL LOAD APPLIED AT 6 INCHES BELOW TOP. USE DEFLECTION CRITERIA REGARDLESS OF LIGHT POLE MATERIAL USED.
   K-LOCATE LIGHT POLE BEHIND SIGNS WHEN THERE IS CONFLICT.

3. FOUNDATION:
   PROVIDE CAST-IN PLACE IN AUGERED HOLES WITH CLASS A(AE) CONCRETE FOR ALL FOUNDATIONS.

4. BREAKAWAY BASE:
   A-USE BREAKAWAY BASE ON ALL LIGHT POLES EXCEPT THOSE LOCATED ON STRUCTURES OR SPECIFIED ON PLANS.
   B-SEE STD DWG SL 15 FOR BREAKAWAY BASE DETAILS.

5. ANCHOR BOLTS:
   A-HOOK ASTM A 307, ANCHOR BOLTS 1"DIA X 36"X4" WITH HEAVY HEXAGON NUTS. GALVANIZE ALL NUTS, WASHERS AND TOP 10" OF THE ANCHOR BOLTS IN ACCORDANCE WITH ASTM A 153. ANCHOR BOLT THREADS PROVIDE OPEN AND DEFECT FREE ANCHOR BOLT THREADS FREE RUN NUTS BY HAND FOR TOTAL THREAD LENGTH.
   B-PLACE ANCHOR BOLTS BY TEMPLATE. DO NOT WELD TO REINFORCING STEEL.

REVISIONS

NO.	DATE	APPR.	REMARKS

UTAH DEPARTMENT OF TRANSPORTATION
STANDARD DRAWINGS FOR ROAD AND BRIDGE CONSTRUCTION
SALT LAKE CITY, UTAH

RECOMMENDED FOR APPROVAL — JULY 03,2002 DATE

CHAIRMAN STANDARDS COMMITTEE APPROVED — JULY 03,2002 DATE

DEPUTY DIRECTOR

LIGHT POLE BREAKAWAY BASE

STANDARD DRAWING TITLE

STD DWG
SL 14

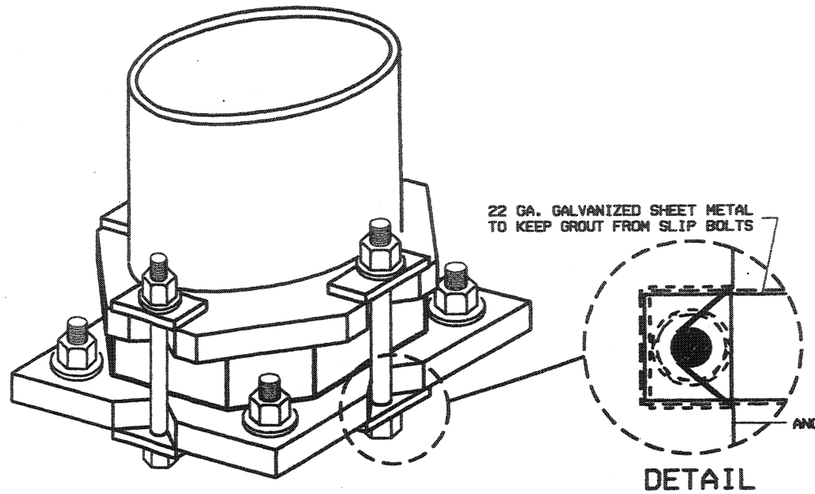

DETAIL

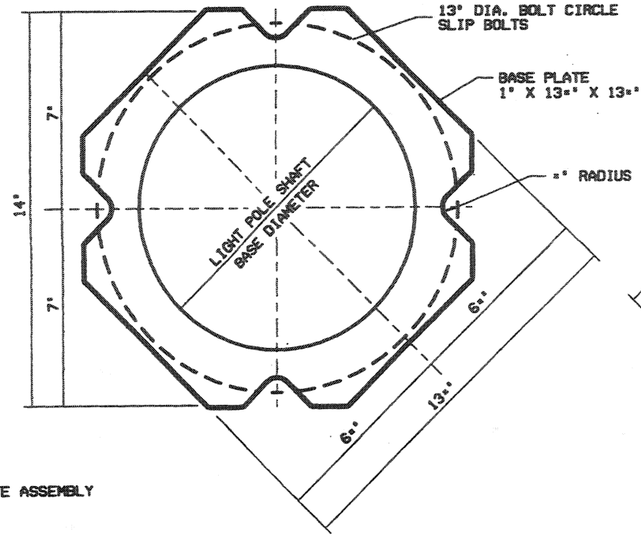

LIGHT POLE BASE PLATE

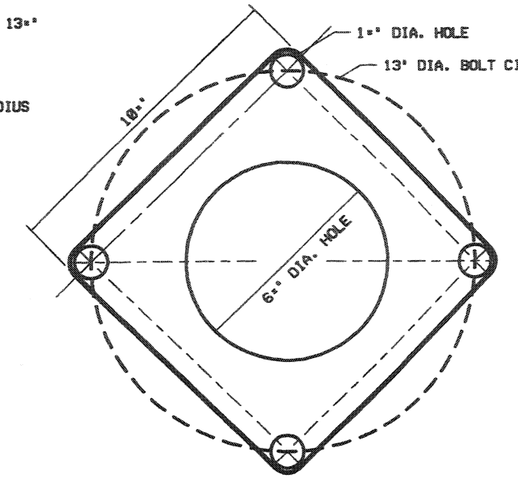

SLIP BOLT RETAINER GASKET
(28 GAUGE STAINLESS STEEL)

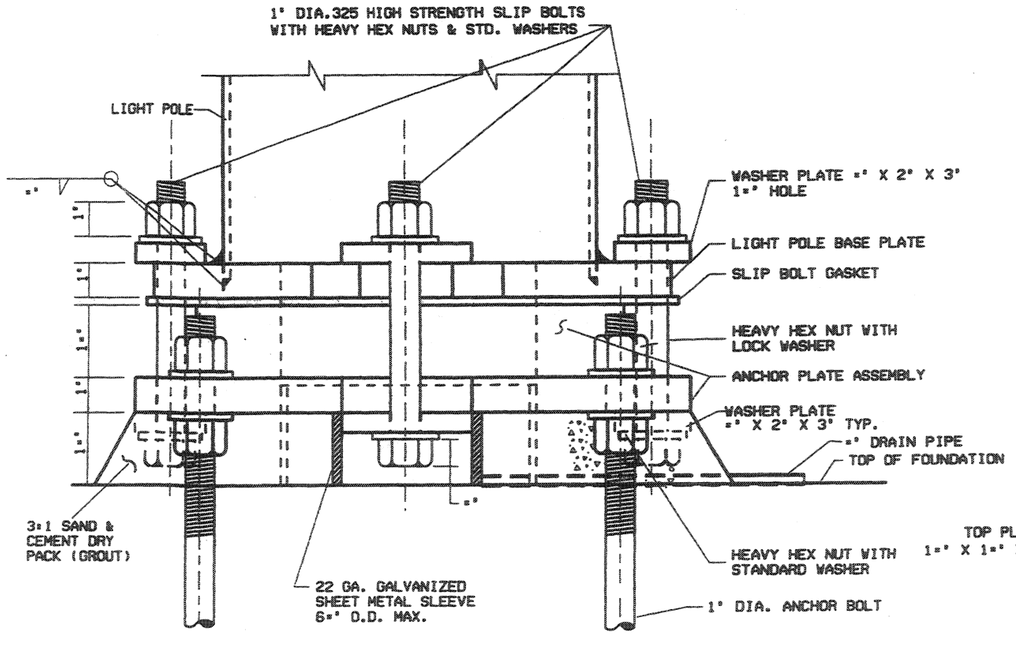

LIGHT POLE BASE

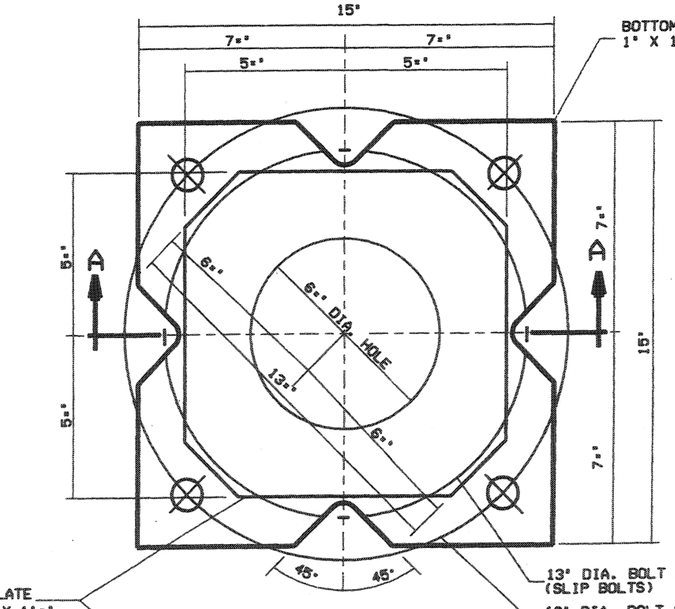

ANCHOR PLATE ASSEMBLY

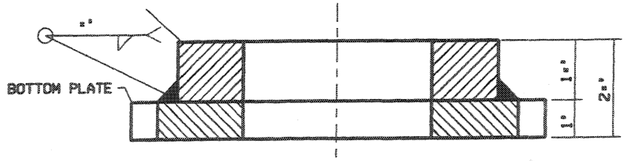

SECTION A - A

NOTES:

1. PLACE ANCHOR PLATE ASSEMBLY ON ANCHOR BOLT LEVELING NUTS AND SECURE IN PLACE.
2. ERECT LIGHT POLE AND SECURE WITH 1 INCH DIA. HIGH STRENGTH BOLTS. INSTALL BOLTS IN THE SLOTS SO THE BOLT SHANKS ARE IN CONTACT WITH THE LIGHT POLE PLATE AND ANCHOR PLATE ASSEMBLY.
3. USE STRUCTURAL STEEL FOR PLATES IN COMPLIANCE WITH ASTM A 36. FURNISH ANCHOR PLATE ASSEMBLY CAST IN COMPLANCE WITH ASTM A 27 GRADE 70-40.
4. HOT-DIP GALVANIZE ALL STEEL PLATE ASSEMBLIES AFTER FABRICATION IN ACCORDANCE WITH ASTM A 123.
5. ZINC ELECTRO PLATE ALL SLIP BOLTS, NUTS AND WASHERS IN ACCORDANCE WITH ASTM A 165 TYPE NS.
6. GALVANIZING BEADS AND RUNS IN ALL CONTACT AREAS OF PLATES IS UNACCEPTABLE.
7. TORQUE ALL SLIP BOLTS TO 80 FT LBS, RELEASE AND RETORQUE TO 70 FT LBS.
8. INSTALL DRY PACK GROUT AFTER LIGHT POLE IS PLACED IN FINAL POSITION.

REVISIONS				
NO.	DATE	APPR.	REMARKS	

UTAH DEPARTMENT OF TRANSPORTATION
STANDARD DRAWINGS FOR ROAD AND BRIDGE CONSTRUCTION
SALT LAKE CITY, UTAH

RECOMMENDED FOR APPROVAL — JULY 03, 2002 DATE

CHAIRMAN STANDARDS COMMITTEE APPROVED — JULY 03, 2002 DATE

DEPUTY DIRECTOR

STANDARD DRAWING TITLE

LUMINAIRE BREAKAWAY BASE DETAIL

STD DWG
SL 15

SHAFT HEIGHT	POLE HEIGHT	ARM EXTENSION DIMENTIONS		MIN. SHAFT BOTTOM	MIN. SHAFT TOP	MIN. WALL THICKNESS	MAX. SHAFT TOP DEFLECTION
		LENGTH	END DIA.	O.D.	O.D.		
28'-0"	31'-0"	6'-0"	2⅝"	7⅝"	4"	11⅞"	4-1/2"
	32'-0"	10'-0"	2⅝"	7⅝"	4"	11⅞"	4-1/2"
38'-0"	41'-0"	6'-0"	2⅝"	9⅝"	4"	11⅞"	6"
	42'-0"	10'-0"	2⅝"	9⅝"	4"	11⅞"	6"

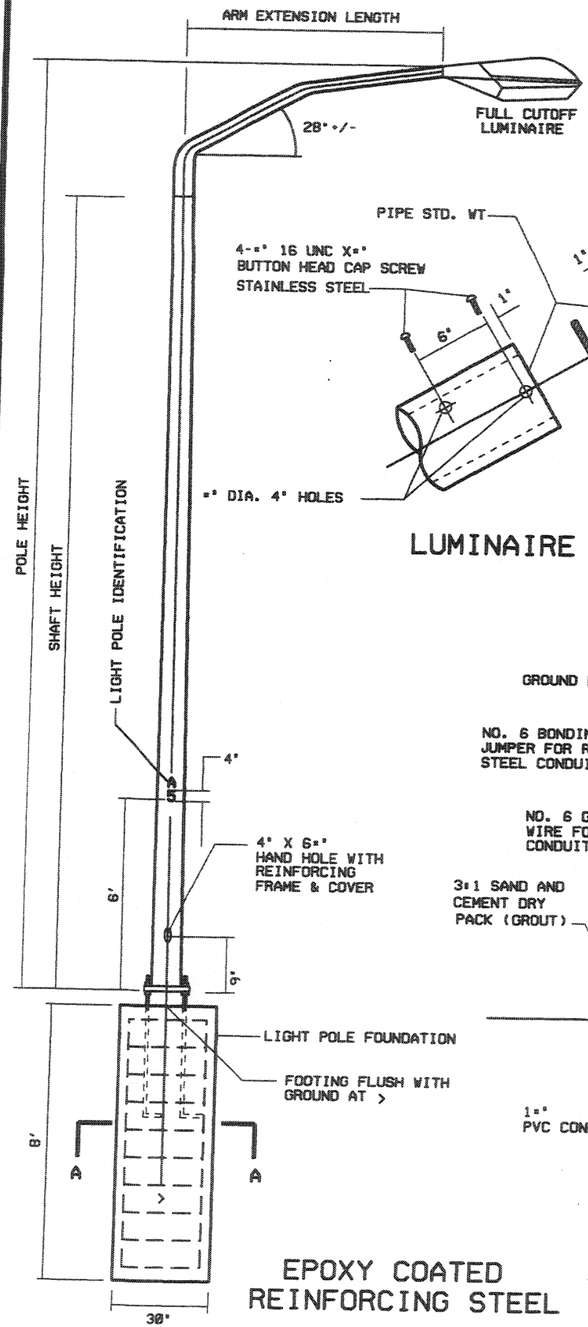

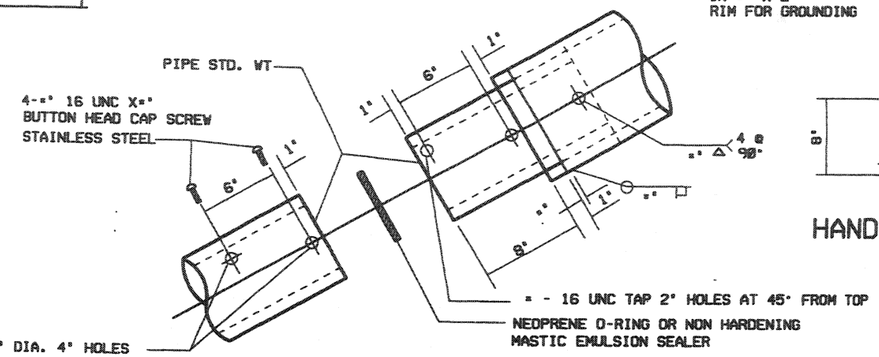

LUMINAIRE ARM CONNECTION

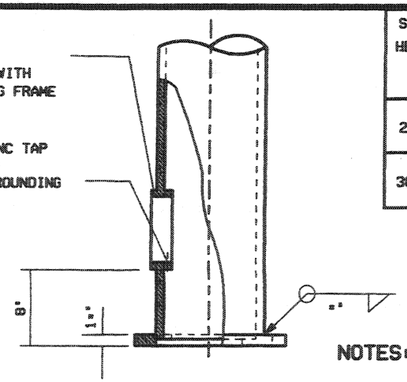

HAND HOLE DETAIL

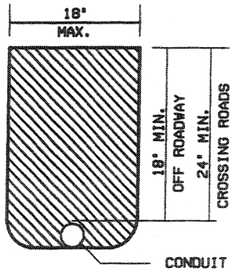

TRENCHING DETAIL

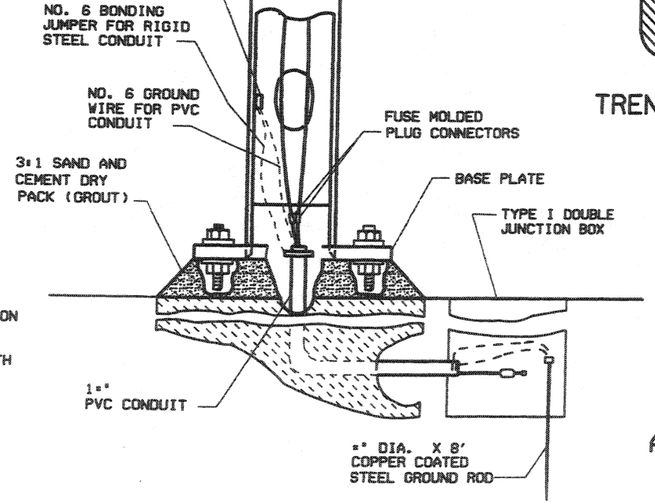

TYPICAL LIGHT POLE CONNECTIONS

EPOXY COATED REINFORCING STEEL

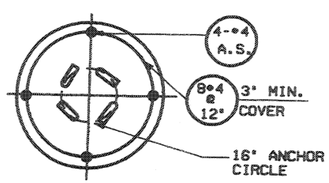

SECTION A-A

ANCHOR BOLT

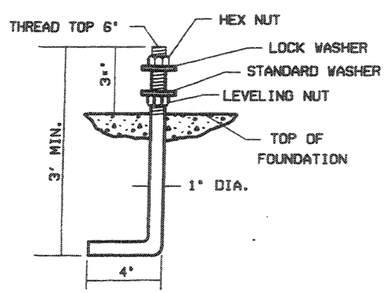

NOTES:

1. LIGHT POLE ASSEMBLY:
   A-THE ASSEMBLY CONSISTS OF A POLE, ARM, BASE, INTERNAL CONDUCTORS, IDENTIFICATION, SPLICES, MOLDED CONNECTORS, FUSES, ANCHOR BOLTS, HARDWARE AND BREAK-AWAY BASE OR ANCHOR BASE.

2. LIGHT POLE:
   A-PROVIDE ASTM A 570 GRADE 33 GALVANIZED IN ACCORDANCE WITH ASTM A 123 FOR LIGHT POLE AND TAPERED STEEL POLES. OTHER LIGHT POLE MATERIALS ACCEPTABLE SUBJECT TO THE APPROVAL OF DESIGN AND DRAWINGS PRIOR TO THE OPENING OF BIDS. SHOP DRAWINGS REQUIRED.
   B-USE THE SAME LIGHT POLE AND MAST ARM THROUGOUT THE PROJECT MEETING THE REQUIREMENTS OF AASHTO SPECIFICATION FOR STRUCTURAL SUPPORT FOR HIGWAY SIGN, LUMINARES AND TRAFFIC SIGNALS FOR AN 80 MPH WIND WITH 104 MPH GUST.
   ALLOWABLE STRESSES: ASTM A 570 GRADE 33 - FB-21.78 KSI (.66 FY)
   FV-10.89 KSI (.33 FY)
   (INCREASE 40% FOR GROUP II AND III LOADING)
   C-PROVIDE COMPATIBLE ARM EXTENSION CONNECTIONS, COMPONENTS AND DETAILS WITH THE TYPE OF POLE UTILIZED.
   D-FURNISH LIGHT POLE BASE PLATE TO MATCH EXISTING BOLT CIRCLE WHEN POLE IS LOCATED ON STRUCTURE.
   E-DESIGN LIGHT POLE FOR A LUMINARE WEIGHT OF 75 LBS AND A PROJECTED AREA OF 3.3 SQ.FEET.
   F-ORIENT ALL ARM EXTENSIONS AT RIGHT ANGLES TO THE SURVEY LINE OF ROADWAY.
   G-OFFSET IS DEFINED AS THE DISTANCE FROM THE EDGE OF TRAVELED WAY TO THE SHAFT CENTER OF LIGHT POLE.
   H-CENTER SHAFT TOP OVER CENTER OF FUNDATION AFTER ARM EXTENSION, LUMINARE AND ALL ELECTRICAL ACCESSORIES ARE IN PLACE.
   J-MAXIMUM ALLOWABLE DEFLECTION AT SHAFT TOP IS BASED ON 100 POUNDS. HORIZONTAL LOAD APPLIAD AT 6 INCHES BELOW TOP. USE DEFLECTION CRITERIA REGARDLESS OF LIGHT POLE MATERIAL USED.
   K-LOCATE LIGHT POLE BEHIND SIGNS WHEN THERE IS CONFLICT.

3. FOUNDATION:
   A-PROVIDE CAST-IN PLACE IN AUGERED HOLES WITH CLASS A(AE) CONCRETE FOR ALL FOUNDATIONS.

4. ANCHOR BOLTS:
   A-HOOK ASTM A 307, ANCHOR BOLTS 1"DIA X 36"X4" WITH HEAVY HEXAGON NUTS. GALVANIZE ALL NUTS, WASHERS AND TOP 10" OF THE ANCHOR BOLTS IN ACCORDANCE WITH ASTM A 153. ANCHOR BOLT THREADS PROVIDE OPEN AND DEFECT FREE ANCHOR BOLT THREADS FREE RUN NUTS BY HAND FOR TOTAL THREAD LENGTH.
   B-PLACE ANCHOR BOLTS BY TEMPLATE. DO NOT WELD TO REINFORCING STEEL.

REVISIONS

NO.	DATE	APPR.	REMARKS

UTAH DEPARTMENT OF TRANSPORTATION
STANDARD DRAWINGS FOR ROAD AND BRIDGE CONSTRUCTION
SALT LAKE CITY, UTAH

JULY 03,2002
DATE

RECOMMENDED FOR APPROVAL

CHAIRMAN STANDARDS COMMITTEE APPROVED

JULY 03,2002
DATE

DEPUTY DIRECTOR

LIGHT POLE ANCHOR BASE

STANDARD DRAWING TITLE

STD DWG
SL 17

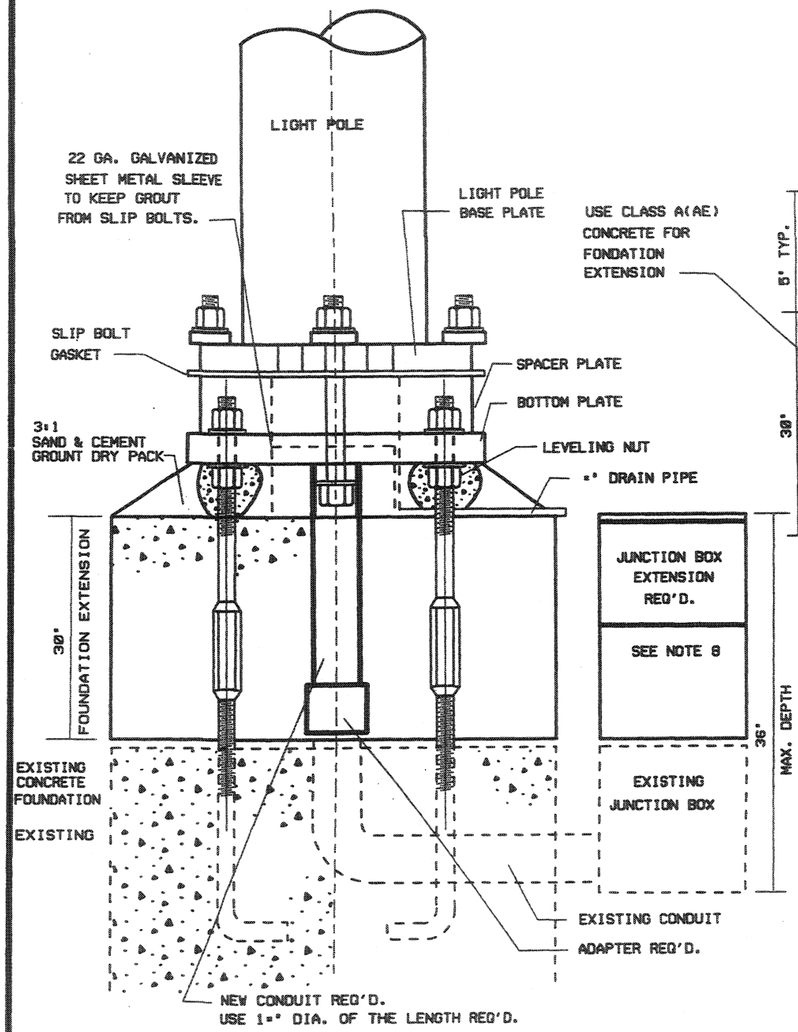

FOUNDATION EXTENSION DETAIL

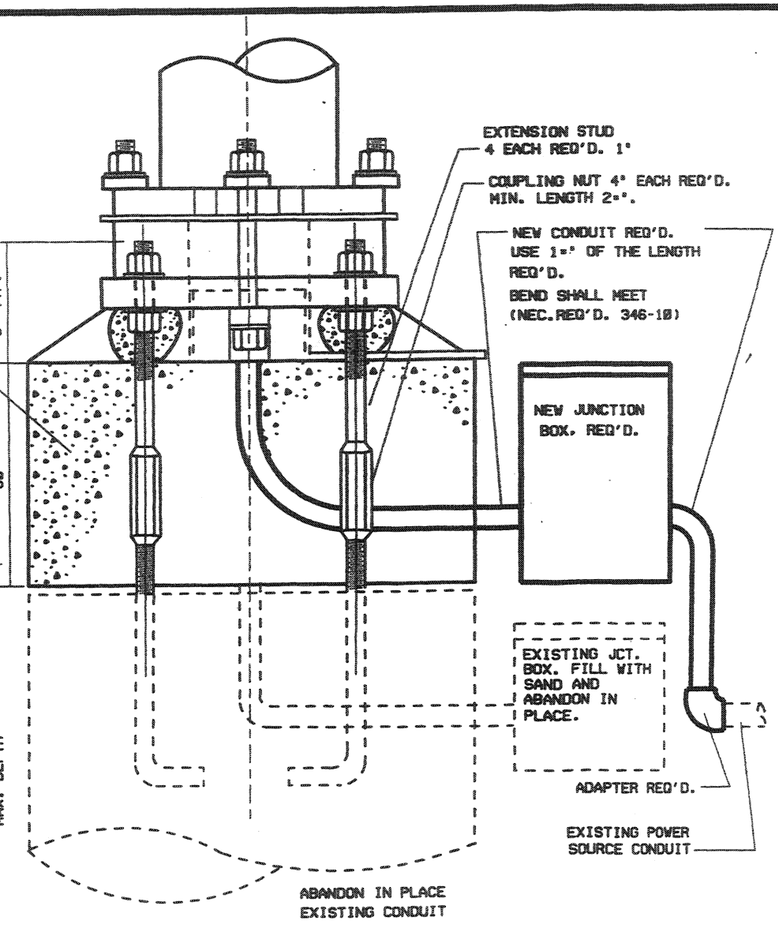

FOUNDATION EXTENSION DETAIL
IN EXCESS OF 30"

REINFORCING STEEL SHALL COMPLY WITH ASTM DESIGNATION A 615 GRADE 60

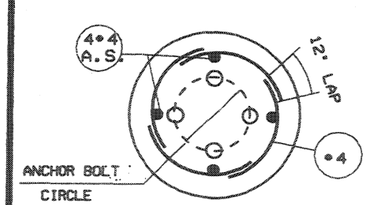

TIE REINFORCING HOOP TIE TO ANCHOR BOLT EXTENSION

SPACING GUIDE FOR REINFORCING STEEL HOOPTIE	
RISE IN FOUNDATION EXTENSION	NO. OF RINGS
6" TO 12"	2
12" TO 30"	3
30" TO 42"	4
42" -	12" SPACING
TOP RING 3" CONCRETE COVER	

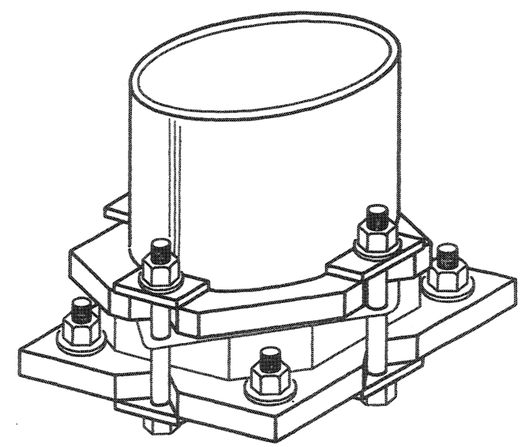

BREAKAWAY BASE REASSEMBLY DETAIL

NOTES:

1. USE COUPLING NUTS AND EXTENSION STUDS ON EXISTING LIGHT POLE FOUNDATION FOR ANY EXTENSION HEIGHT REQUIRED.
2. PROVIDE COUPLING NUTS CONFORMING WITH ASTM A 307 SPECIFICATIONS WITH A MINIMUM LENGTH OF 2-INCHES COUPLING NUTS IN ACCORDANCE WITH (ASTM A 123), OR ZINC PLATED (ASTM A 152)
3. USE 1 INCH DIA. EXTENSION STUDS CONFORMING TO ASTM A 307. GALVANIZE EXTENSION STUDS CONFORMING TO ASTM A 123 OR ZINC PLATE CONFORMING TO ASTM A 153.
4. ATTACH COUPLING NUTS TO EXISTING ANCHOR BOLTS. INSTALL EXTENSION STUDS TO PROVIDE 5 INCHES PROJECTION ABOVE TOP OF NEW FOOTING. EXTEND AND/OR PLACE CONDUIT AS SHOWN. PLACE REINFORCING STEEL AS SHOWN. FORM AND CAST FOUNDATION EXTENSION WITH CLASS A(AE) CONCRETE.
5. REINSTALL BREAKAWAY BASE-PLATE BOTTOM AND SPACER PLATE ON EXTENDED ANCHOR BOLT LEVELING NUTS.
6. ERECT AND PLUMB POLE INSTALL SLIP BOLT SHANKS IN CONTACT WITH PLATES. TORQUE SLIP BOLTS TO 80 FT-LBS. RELEASE AND RE-TORQUE TO 66 FT-LBS VERTICALLY OVER CENTER OF BASE.
7. GROUT AFTER LIGHT POLE IS SECURED IN FINAL POSITION.
8. EXTEND FOUNDATION EXTENSION, TO A MAXIMUM OF 30 INCHES, USE EXISTING CONDUIT AND JUNCTION BOX. EXTEND CONDUIT AS SHOWN. PLACE JUNCTION BOX TO GRADE BY ADDITION OF JUNCTION BOX TO A MAXIMUM JUNCTION BOX DEPTH OF 36 INCHES, BEYOND 36 INCHES INSTALL A NEW JUNCTION BOX AND CONDUIT SYSTEM AS DETAILED.
9. ADJUST JUNCTION BOXES NOT LOCATED AT LIGHT POLE TO GRADE BY ADDITION OF JUNCTION BOX EXTENSIONS TO MAXIMUM JUNCTION BOX DEPTH OF 36 INCHES, BEYOND 36 INCHES INSTALL A NEW JUNCTION BOX.
10. PROVIDE NEW CONDUIT LENGTH AND CONFIGURATION NECESSARY TO COUPLE THE EXISTING CONDUIT THROUGH THE FOUNDATION EXTENSION.

REVISIONS				
NO.	DATE	APPR.	REMARKS	

UTAH DEPARTMENT OF TRANSPORTATION
STANDARD DRAWINGS FOR ROAD AND BRIDGE CONSTRUCTION
SALT LAKE CITY, UTAH

JULY 03,2002 DATE — RECOMMENDED FOR APPROVAL

JULY 03,2002 DATE — CHAIRMAN STANDARDS COMMITTEE APPROVED

DEPUTY DIRECTOR

LIGHT POLE FOUNDATION EXTENSION
STANDARD DRAWING TITLE

STD DWG
SL 18

D10-3

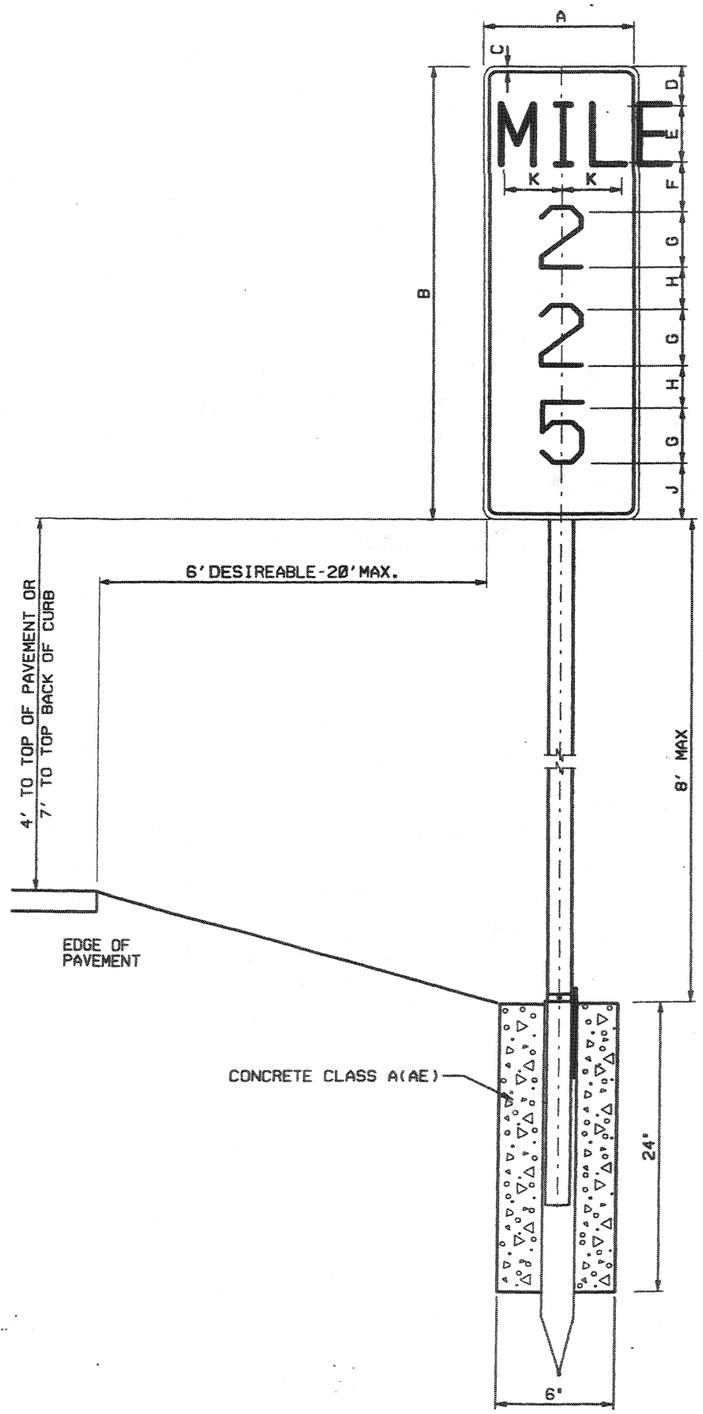

TYPICAL INSTALLATION

D10-3

A	B	C	D
10	30	0.38	3
12	48	0.38	2.2

E	F	G	H
4B	3	4D	2.5
5D	2.8	10D	2.8

J	K	L	
3	3.9	1.5	
2.5	4.9	1.5	

D10-2

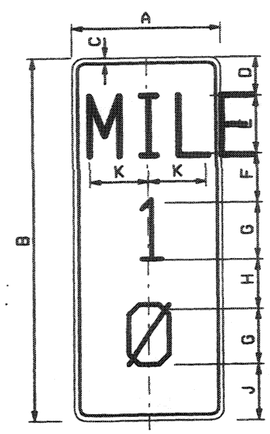

D10-2

A	B	C	D
10	24	0.38	3
12	36	0.38	3

E	F	G	H
4B	3	4D	3
5D	2.5	10D	2.5

J	K	L
3	3.9	1.5
3	4.9	1.5

D10-1

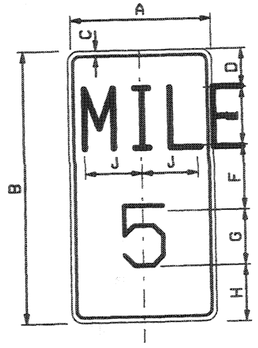

D10-1

A	B	C	D
10	18	0.38	2.5
12	24	0.38	3

E	F	G	H
4B	4	4D	3.5
5D	3	10D	3

J	K
3.9	1.5
4.9	1.5

NOTES:

1. USE: 12' WIDE FOR INTERSTATE
   10' ALL OTHER HIGHWAYS.
2. REFLECTORIZED WHITE LEGEND AND BORDER ON A REFLECTORIZED GREEN BACKGROUND.
3. DO NOT EXCEED 8' MOUNTING HEIGHT FROM BOTTOM OF SIGN TO THE GROUND WHILE MAINTAINING 4' MINIMUM HEIGHT ABOVE PAVEMENT EDGE.
4. USE "TUBULAR STEEL SIGN POST (P2)". FASTEN PANEL WITH 5/16"X 3" S.S. BOLT, LOCK NUT, USE 5/16" NYLON WASHER AGAINST SIGN FACE.

REVISIONS

NO.	DATE	APPR.	REMARKS
1	08/13/02	L.	REVISED ENTIRE SHEET

UTAH DEPARTMENT OF TRANSPORTATION
STANDARD DRAWINGS FOR ROAD AND BRIDGE CONSTRUCTION
SALT LAKE CITY, UTAH

RECOMMENDED FOR APPROVAL — DEC.19,2002 DATE

CHAIRMAN STANDARDS COMMITTEE APPROVED — DEC.19,2002 DATE

DEPUTY DIRECTOR

TYPICAL INSTALLATION FOR MILEPOST SIGNS

STANDARD DRAWING TITLE

STD DWG
SN 5

REGULATORY, WARNING, ROUTE MARKERS

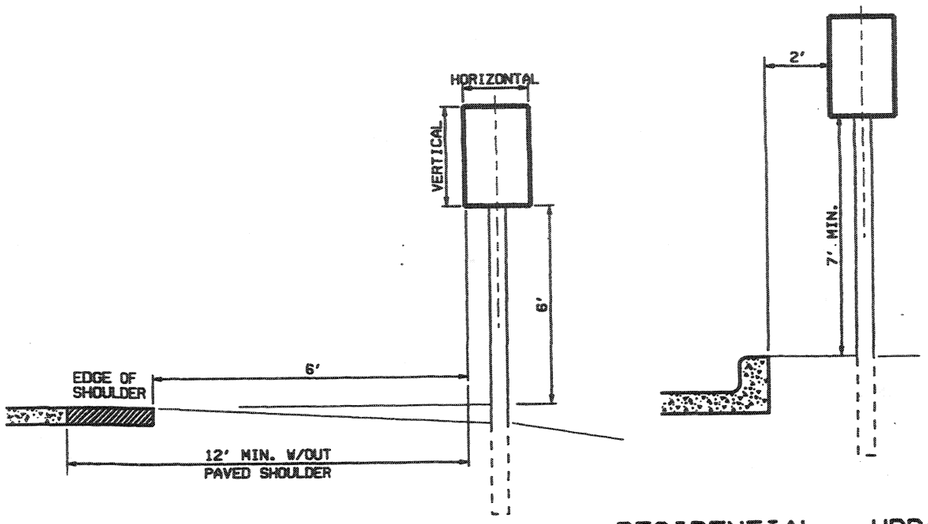

RURAL

RESIDENTIAL - URBAN

SIGN INSTALLATION

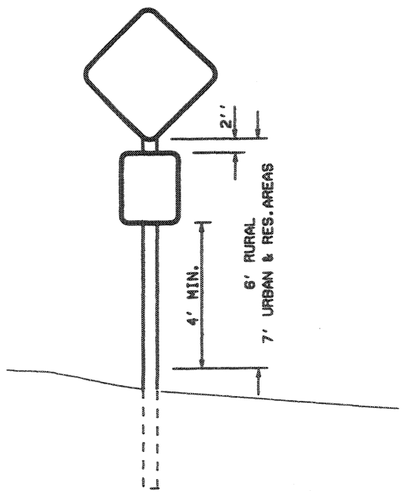

W/SUPPLEMENTAL SIGN

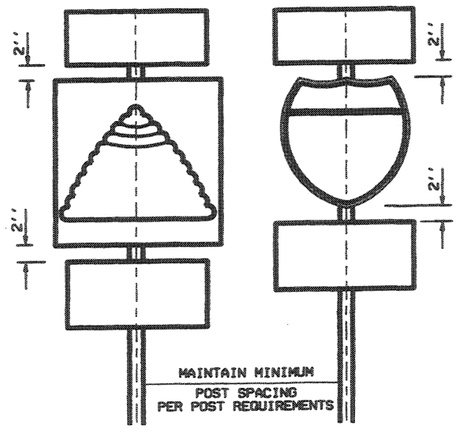

ROUTE MARKERS

GUIDE & DIRECTIONAL SIGNING

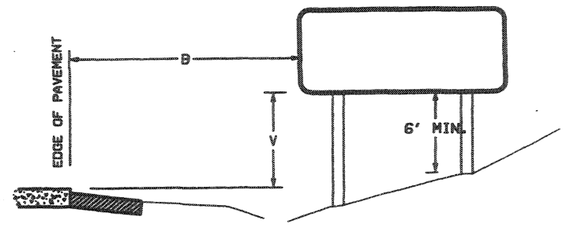

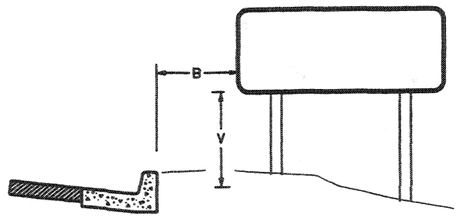

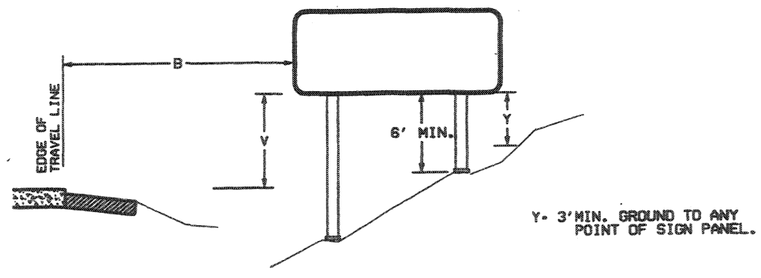

Y- 3'MIN. GROUND TO ANY POINT OF SIGN PANEL.

GUIDE & DIRECTIONAL SIGN PLACEMENT

(B) LATERAL PLACEMENT			(V) VERTICAL PLACEMENT		
CONVENTIONAL		INTERSTATE	INTERSTATE	CONVENTIONAL	
RURAL	URBAN			RURAL	URBAN
6'- 12' FROM EDGE OF PAVEMENT OR SHOULDER	2' MIN WITH CURB	DESIRABLE - 30' FROM TRAVEL LANE ACCEPTABLE- 12' MIN FROM EDGE OF SHOULDER	DESIRABLE - 7' ACCEPTABLE - 6'	6'	7'
	2' MIN PLUS SHOULDER		7'		
	WITHOUT CURB	2' MIN WHEN BEHIND BARRIER	7'		

REVISIONS

NO.	DATE	APPR	REMARKS

UTAH DEPARTMENT OF TRANSPORTATION
STANDARD DRAWINGS FOR ROAD AND BRIDGE CONSTRUCTION
SALT LAKE CITY, UTAH

RECOMMENDED FOR APPROVAL — JULY 03, 2002 DATE

CHAIRMAN STANDARDS COMMITTEE APPROVED — JULY 03, 2002 DATE

DEPUTY DIRECTOR

PLACEMENT OF GROUND MOUNT SIGNS

STANDARD DRAWING TITLE

STD DWG
SN 7

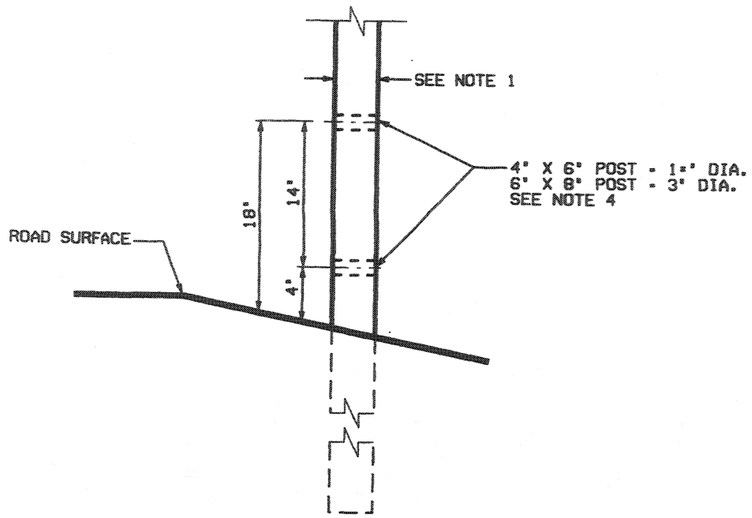

WEAKENED POST DETAIL
SEE NOTE 3

TIMBER SIGN POSTS (NOMINAL)

VERTICAL SIGN DIMENSION (INCHES) \ HORIZONTAL SIGN DIMENSION (INCHES)	12	24	36	48	60	72	84	96	108	120	132	144
12	1 - 4X4 4	1 - 4X4 4	1 - 4X4 4	1 - 4X4 4	2 - 4X4 4	2 - 4X4 4	2 - 4X4 4	2 - 4X4 4	2 - 4X4 4	2 - 4X4 4	2 - 4X4 4	2 - 4X4 4
18	1 - 4X4 4	1 - 4X4 4	1 - 4X4 4	1- 4X6 4	2 - 4X4 4	2 - 4X4 4	2 - 4X4 4	2 - 4X6 4	2 - 4X6 4	2 - 4X6 4	2 - 4X6 4	2 - 4X6 4
24	1 - 4X4 4	1 - 4X4 4	1- 4X6 4	1- 4X6 4	2 - 4X4 4	2 - 4X6 4	2 - 4X6 4	2 - 4X6 4	2 - 4X6 4	2 - 4X6 4	2 - 4X6 4	2 - 4X6 4
30	1 - 4X4 4	1 - 4X4 4	1- 4X6 4	1- 4X6 4	2 - 4X6 4	2 - 4X6 4	2 - 4X6 4	2 - 4X6 4	2 - 4X6 4	2 - 4X6 4	3 - 4X6 4	3 - 4X6 4
36	1 - 4X4 4	1- 4X6 4	1- 4X6 4	1- 4X6 4	2 - 4X6 4	2 - 4X6 4	2 - 4X6 4	2 - 4X6 4	3 - 4X6 4	3 - 4X6 4	3 - 4X6 4	3 - 4X6 4
42	1 - 4X4 4	1- 4X6 4	1- 4X6 4	1- 4X6 4	2 - 4X6 4	2 - 4X6 4	2 - 4X6 4	3 - 4X6 4	3 - 4X6 4	3 - 4X6 4	2 - 6X8 5	2 - 6X8 5
48	1 - 4X4 4	1- 4X6 4	1- 4X6 4	2 - 4X6 4	2 - 4X6 4	2 - 4X6 4		3 - 4X6 4	3 - 4X6 4	2 - 6X8 4	2 - 6X8 5	2 - 6X8 5
54	1 - 4X4 4	1- 4X6 4	1- 6X8 5	2 - 4X6 4	2 - 4X6 4	1- 6X8 5		2 - 6X8 5	2 - 6X8 5	2 - 6X8 5	2 - 6X8 5	2 - 6X8 5
60	1- 4X6 4	1- 4X6 4	1- 6X8 5	2 - 4X6 4	1- 6X8 5	1- 6X8 5		2 - 6X8 5	2 - 6X8 5	2 - 6X8 5	2 - 6X8 5	2 - 6X8 5
66	1- 4X6 4	1- 4X6 4	1- 6X8 5	2 - 4X6 4	1- 6X8 5			2 - 6X8 5	2 - 6X8 5	2 - 6X8 5	2 - 6X8 5	
72	1- 4X6 4	1- 6X8 5	1- 6X8 5	1- 6X8 5	1- 6X8 5			2 - 6X8 5	2 - 6X8 5	2 - 6X8 5		

LEGEND: 2 - 4X6 / 5 — NUMBER & SIZE (INCH X INCH) OF POSTS; EMBEDMENT DEPTH IN FEET

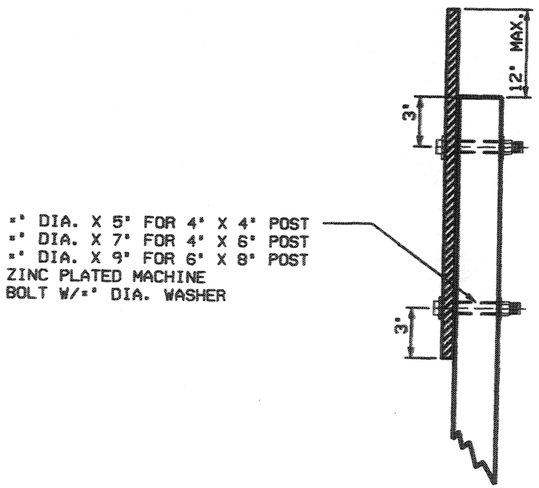

SIDE VIEW

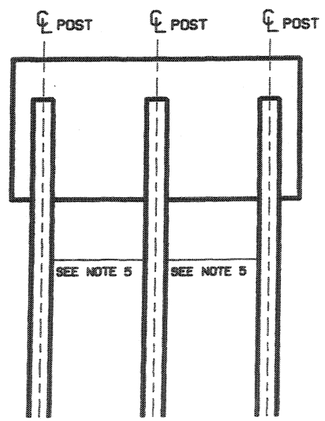

MULTIPLE POST SIGN

NOTES:

1. NARROW POST DIMENSION TO FACE TRAFFIC.
2. USE ONE 4"X 6" POST FOR MULTIPLE SIGN INSTALLATION ON SINGLE POST, EXCLUDING ROUTE MARKERS.
3. MINIMUM DEPTH OF EMBEDMENT: 4' UNLESS 5' IS SHOWN.
4. FIELD DRILL TWO HOLES IN THE CENTER OF THE POST. DRILL PERPENDICULAR TO THE CENTER LINE OF THE ROAD.
5. MINIMUM SPACING BETWEEN POST:

	POST SIZE	SPACING
FOR 3 OR MORE POSTS	4" X 4"	- 4'
FOR 3 OR MORE POSTS	4" X 6"	- 4'
FOR 2 OR MORE POSTS	6" X 8"	- 7'

REVISIONS

NO.	DATE	APPR	REMARKS
1	10/31/02	G.	UPDATED THE BREAKAWAY HOLE HEIGHT REQUIREMENT TO AASHTO STANDARD IN WEAKENED POST DETAIL

UTAH DEPARTMENT OF TRANSPORTATION
STANDARD DRAWINGS FOR ROAD AND BRIDGE CONSTRUCTION
SALT LAKE CITY, UTAH

RECOMMENDED FOR APPROVAL — DEC. 19, 2002 — DATE
CHAIRMAN STANDARDS COMMITTEE
APPROVED — DEC. 19, 2002 — DATE
DEPUTY DIRECTOR

GROUND MOUNTED TIMBER SIGN POST (P)

STANDARD DRAWING TITLE

STD DWG
SN 8

TUBULAR STEEL POST (P2)
(SOCKET SYSTEM)
(SINGLE OR DOUBLE POST)

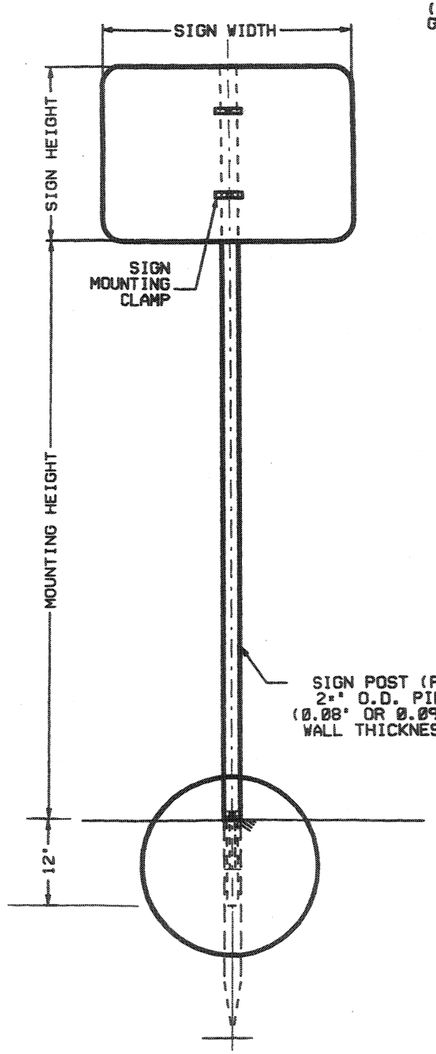

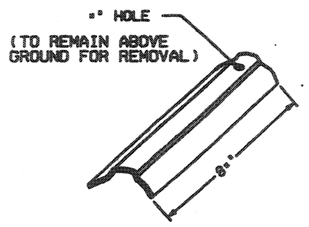

WEDGE

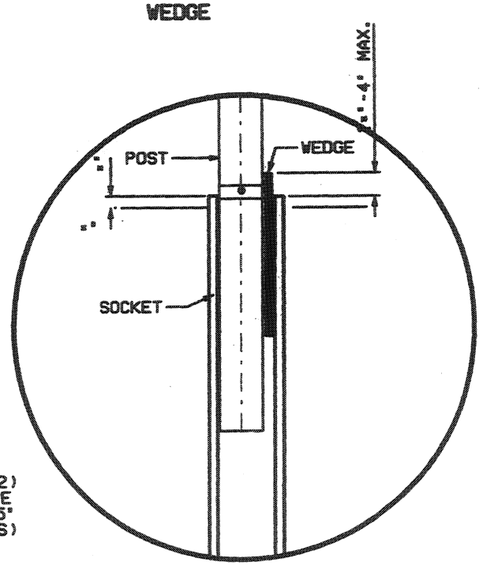

POST NOTES:
POSTS PRE-PUNCHED WITH •" HOLES.
MOUNT SIGN DIRECTLY TO POST OR USE AN APPROVED MOUNTING CLAMP. SPACING OF HOLES FROM TOP IN INCHES ARE AS FOLLOWS:

1",3",10",16",21",23",24",27",33",37",39" AND 45"

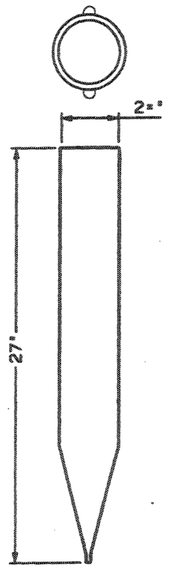

TUBULAR SOCKET

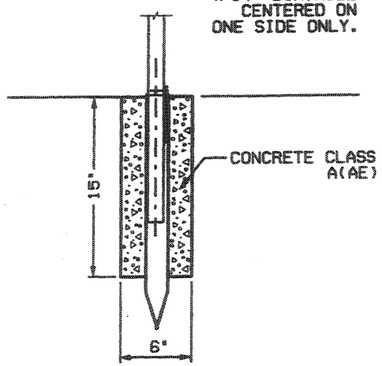

CONCRETE FOUNDATION
SEE NOTE 1

WEDGE

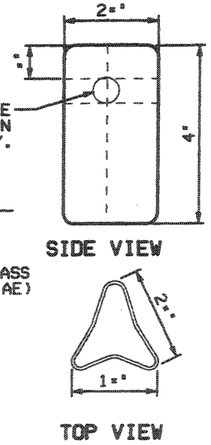

SIDE VIEW

TOP VIEW

TUBULAR STEEL SIGN POSTS
HORIZONTAL SIGN DIMENSION (INCH)

VERTICAL SIGN DIMENSION (INCH)	12	24	36	48	60	72	84	96	108	120	132	144
12	1 P2	1 P2	1 P2	2 P2	2 P2	2 P2	2 P2	2 P2	2 P2	2 P2	2 P2	2 P2
18	1 P2	1 P2	1 P2	2 P2	2 P2	2 P2	2 P2	2 P2	2 P2	2 P2	2 P2	2 P2
24	1 P2	1 P2	1 P2	2 P2	2 P2	2 P2	2 P2	2 P2	2 P2	2 P2	1 P4	1 P4
30	1 P2	1 P2	1 P2	2 P2	2 P2	2 P2	2 P2	2 P2	1 P4	1 P4	1 P4	1 P4
36	1 P2	1 P2	1 P2	2 P2	2 P2	2 P2	1 P4	1 P4	1 P4	1 P4	1 P4	1 P4
42	1 P2	1 P2	1 P2	2 P2	2 P2	1 P4	1 P4	1 P4	2 P4	2 P4	2 P4	2 P4
48	1 P2	1 P2	2 P2	2 P2	2 P2	1 P4	1 P4	2 P4	2 P4	2 P4	2 P4	2 P4
54	1 P2	1 P2	2 P2	2 P2	1 P4	1 P4	2 P4	2 P4	2 P4	2 P4	2 P4	2 P4
60	1 P2	1 P2	2 P2	2 P2	1 P4	1 P4	2 P4	2 P4	2 P4	2 P4	2 P4	2 P4
66	1 P4	1 P4	1 P4	1 P4	1 P4	2 P4	2 P4	2 P4	2 P4	2 P4		
72	1 P4	1 P4	1 P4	1 P4	1 P4	2 P4	2 P4	2 P4	2 P4	2 P4		

LEGEND: 1 / P4 — NUMBER OF POSTS / TYPE OF POST
P2 - 2•"X 0.08 (SOCKET SYM.)
P4 - 2•"X SCH. 80 (SLIPBASE)
REFER TO STD DWG SN 11

NOTES:
1. FOR SOFT SOIL CONDITIONS USE TRIANGULAR STEEL SIGN POST ANCHOR OR PLACE TUBULAR SOCKET IN A 6 INCH DIAMETER BY 15 INCH DEEP CONCRETE FOUNDATION.
2. YELLOW POSTS MAYBE USED FOR LEFT SIDE (MEDIAN) SIGN INSTALLATIONS AND FOR SIGN LOCATIONS HAVING A HIGH PROBABLY OF IMPACTS AS DETERMINED BY THE REGION TRAFFIC ENGINEER.
3. P4 SIGN POST MAY BE USED FOR MOST SMALL AREA SIGN. CALCULATE POST NEEDS AT 30 SQUARE FEET OF SIGN PER POST. SEE STANDARD FOR POST SPACING.

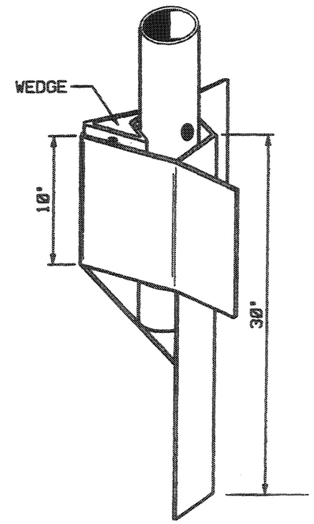

TRANGULAR STEEL SIGN POST ANCHOR
SEE NOTE 1

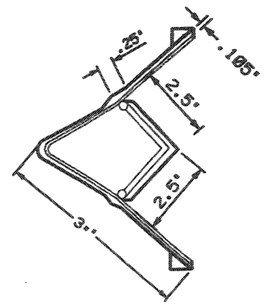

TOP VIEW

REVISIONS

NO.	DATE	APPR	REMARKS

UTAH DEPARTMENT OF TRANSPORTATION
STANDARD DRAWINGS FOR ROAD AND BRIDGE CONSTRUCTION
SALT LAKE CITY, UTAH

RECOMMENDED FOR APPROVAL — JULY 03,2002 DATE

CHAIRMAN STANDARDS COMMITTEE APPROVED — JULY 03,2002 DATE

DEPUTY DIRECTOR

GROUND MOUNTED TUBULAR STEEL SIGN POST (P2)

STANDARD DRAWING TITLE

STD DWG
SN 9

SIGN INSTALLATION

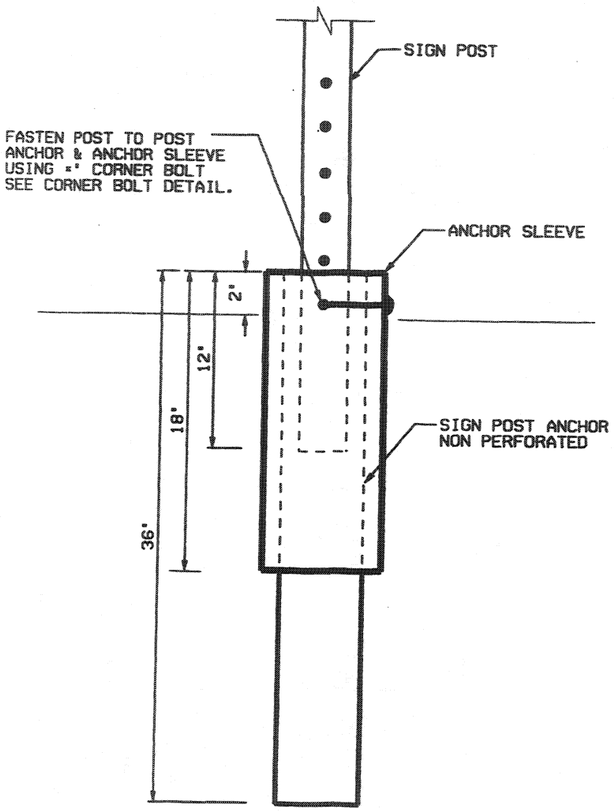

TYPICAL INSTALLATION ,
HIGH IMPACT AREAS
(TWO PIECE BREAKAWAY ANCHOR)

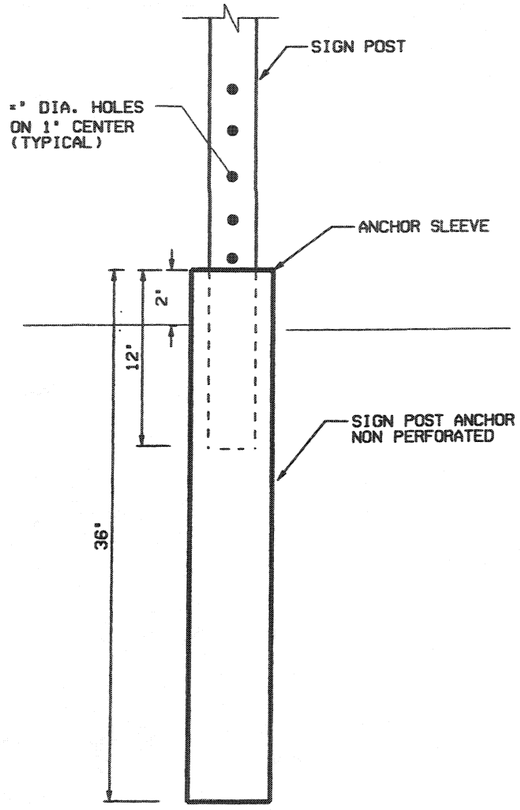

TYPICAL INSTALLATION
(W/ONE PIECE BREAKAWAY ANCHOR)

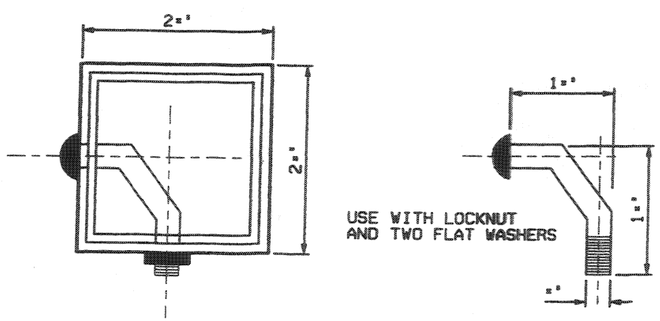

CORNER BOLT DETAIL

SQUARE STEEL SIGN POSTS

VERTICAL SIGN DIMENSION (INCHES) \ HORIZONTAL SIGN DIMENSION (INCHES)	12	24	36	48	60	72	84	96	108	120	132	144
12	1 T1	1 T1	1 T1	1 T1	2 T1	2 T1	2 T1	2 T1	2 T1	2 T1	2 T1	2 T1
18	1 T1	1 T1	1 T1	1 T1	2 T1	2 T1	2 T1	2 T1	2 T1	2 T1	2 T1	2 T2
24	1 T1	1 T1	1 T1	1 T1	2 T1	2 T1	2 T1	2 T1	2 T2	2 T2	2 T2	2 T2
30	1 T1	1 T1	1 T2	2 T1	2 T1	2 T1	2 T2	2 T2	2 T2	2 T2	2 T2	
36	1 T1	1 T1	1 T2	2 T1	2 T1	2 T2	2 T2	2 T2	2 T2			
42	1 T1	1 T2	1 T2	2 T1	2 T2	2 T2	2 T2					
48	1 T1	1 T2	2 T1	2 T2	2 T2	2 T2						
54	1 T1	1 T2	2 T2	2 T2	2 T2							
60	1 T1	1 T2	2 T2	2 T2								
66	1 T1	1 T2	2 T2									
72	1 T1	1 T2	2 T2									

T1 - 2" 12 GAUGE W/2½" ANCHOR, 2½" SLEEVE
T2 - 2½" 12 GAUGE W/3/4" ANCHOR, 3" SLEEVE

1. FOR SOFT SOIL USE TRIANGULAR STEEL SIGN POST ANCHOR: REFER TO STD DWG SN 12

NO	DATE	APPR.	REVISIONS	REMARKS

UTAH DEPARTMENT OF TRANSPORTATION
STANDARD DRAWINGS FOR ROAD AND BRIDGE CONSTRUCTION
SALT LAKE CITY, UTAH

RECOMMENDED FOR APPROVAL — JULY 03,2002 DATE

CHAIRMAN STANDARDS COMMITTEE APPROVED — JULY 03,2002 DATE

DEPUTY DIRECTOR

GROUND MOUNTED
SQUARE STEEL
SIGN POST (P3)

STANDARD DRAWING TITLE

STD DWG
SN 10

TUBULAR STEEL POSTS (P4)
(WITH SLIPBASE)
(SINGLE OR DOUBLE POST)

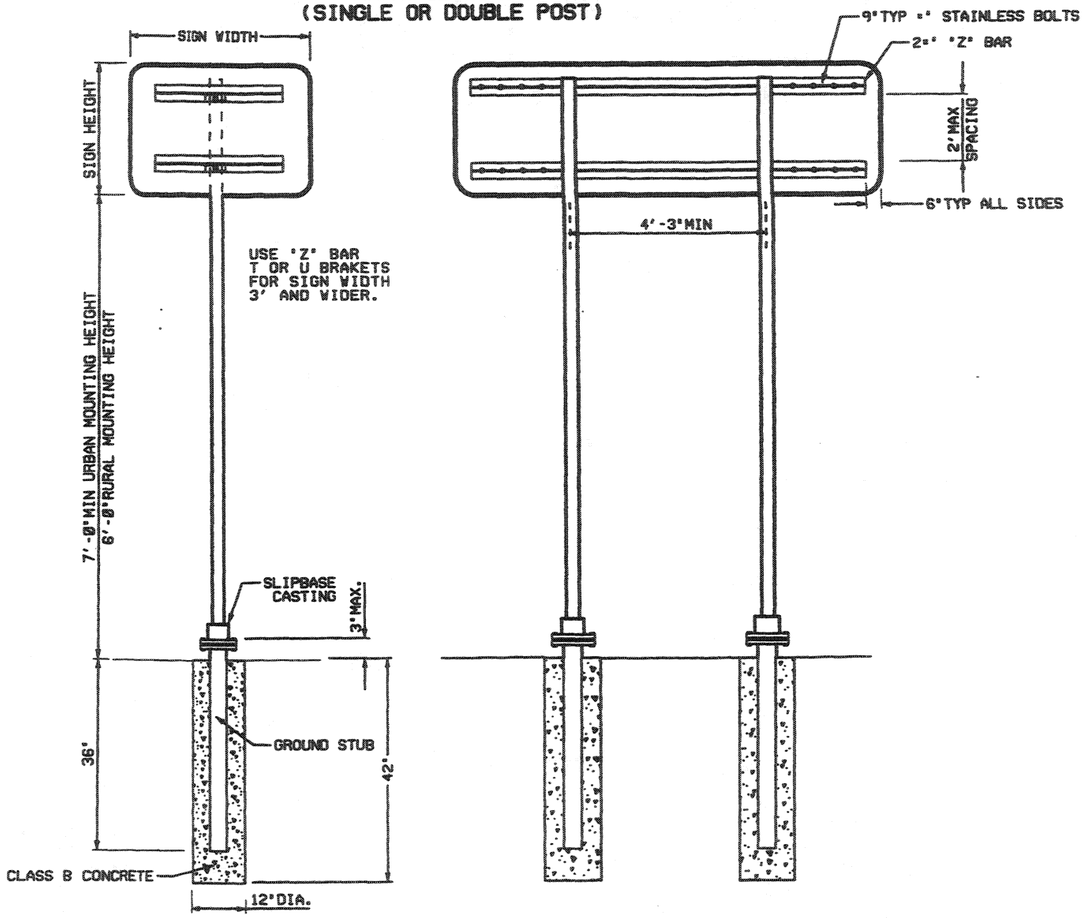

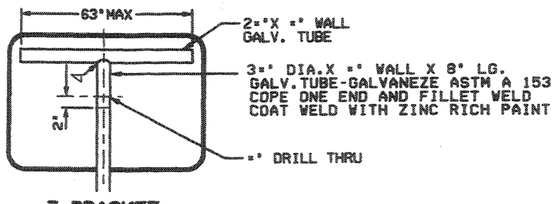

T BRACKET

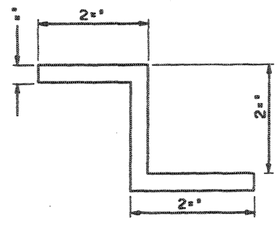

'Z' BAR - ASTM B 221-6061T6

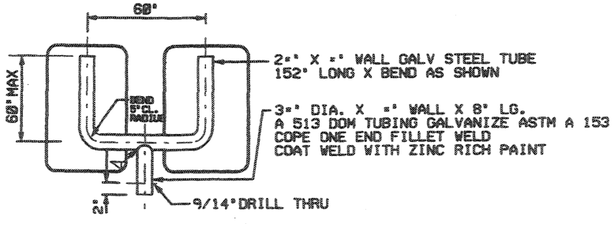

U BRACKET

EXTEND T AND U BRACKETS TO 2" SHORT OF THE EDGE OF THE PANEL.

STANDARD PIPE SIZE	A	B	C	D	E	F	G	K	L	R1	R2
2	3±	2±	1±	1±	±	±	1	2±	1±	1±	1±
2±	4±	3±	2	1±	±	±	1	3±	1±	1±	1±

DIMENSIONS FOR MOUNTING CLAMP

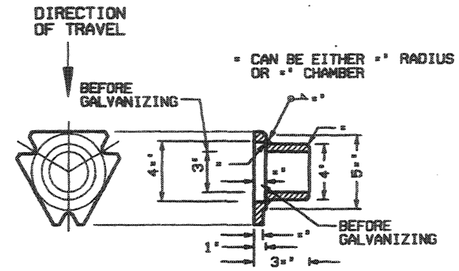

U-BOLT

U-BOLT TO BE MADE IN ACCORDANCE WITH STANDARD MANUFACTURING PROCEDURE. ±" OR ±" DIAMETER STOCK IS PERMISSIBLE. AMERICAN STANDARD REGULAR SEMI-FINISHED HEX NUTS AND LOCKWASHERS.

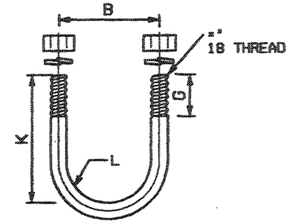

SLIPBASE CASTING

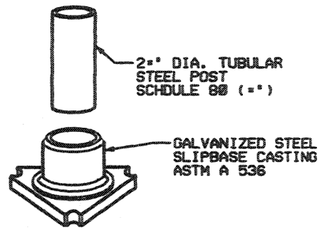

PIPE CLAMP CASTING

PIPE CLAMP CASTING: ASTM B26 OR B108 ALUMINUM ALLOY A444.0-T4 OR 356.0-F. SIGN MOUNTING CLAMP PARTS NOT MADE FROM ALUMINUM: GALVANIZED IN CONFORMANCE WITH ASTM A 153 OR STAINLESS STEEL.

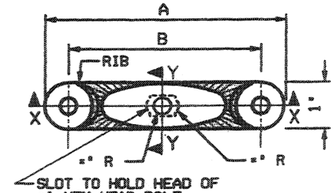

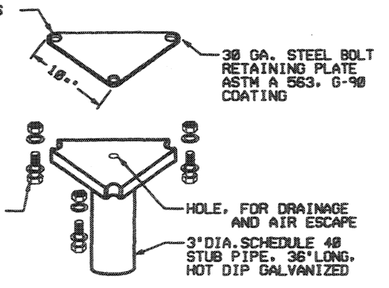

TYPICAL ASSEMBLY

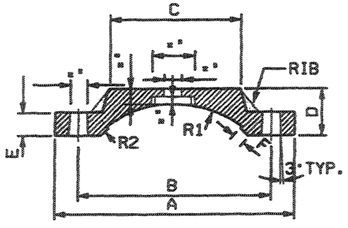

SECTION X-X

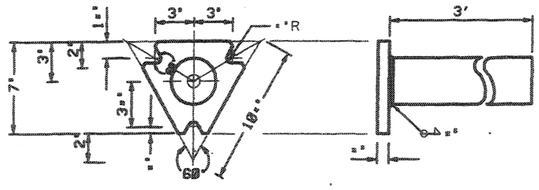

SLIPBASE STUB POST

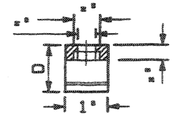

SECTION Y-Y

MOUNTING CLAMP FOR SOCKET OR SLIPBASE

NO.	DATE	APPR.	REMARKS

REVISIONS

UTAH DEPARTMENT OF TRANSPORTATION
STANDARD DRAWINGS FOR ROAD AND BRIDGE CONSTRUCTION
SALT LAKE CITY, UTAH

RECOMMENDED FOR APPROVAL — JULY 03,2002 DATE

CHAIRMAN STANDARDS COMMITTEE APPROVED — JULY 03,2002 DATE

DEPUTY DIRECTOR

STANDARD DRAWING TITLE

SLIPBASE
GROUND MOUNTED
TUBULAR STEEL
SIGN POST (P4)

STD DWG
SN 11

HORIZONTAL SIGN DIMENSION (W)

VERTICAL SIGN DIMENSION (V)	ONE POST PER SIGN					TWO POSTS PER SIGN										THREE POSTS PER SIGN								
	1'-0"	2'-0"	3'-0"	4'-0"	5'-0"	6'-0"	7'-0"	8'-0"	9'-0"	10'-0"	11'-0"	12'-0"	13'-0"	14'-0"	15'-0"	16'-0"	17'-0"	18'-0"	19'-0"	20'-0"	21'-0"	22'-0"	23'-0"	24'-0"
1'-0"	3"Ø 3'-8"	3"Ø 3'-8"	3"Ø 3'-8"	3"Ø 3'-8"	3"Ø 3'-8"	S3X5.7 3'-8"	S3X5.7 3'-8"	S3X5.7 3'-8"	S3X5.7 3'-8"	S3X5.7 3'-8"	S3X5.7 3'-8"	S3X5.7 3'-8"	S3X5.7 3'-8"	S3X5.7 3'-8"	S3X5.7 3'-8"	S3X5.7 3'-8"	S3X5.7 3'-8"	S3X5.7 3'-8"	S3X5.7 3'-8"	S3X5.7 3'-8"	S3X5.7 3'-8"	S3X5.7 3'-8"	S3X5.7 3'-8"	S3X5.7 3'-8"
1'-6"	3"Ø 3'-8"	3"Ø 3'-8"	3"Ø 3'-8"	3"Ø 3'-8"	3"Ø 3'-8"	S3X5.7 3'-8"	S3X5.7 3'-8"	S3X5.7 3'-8"	S3X5.7 3'-8"	S3X5.7 3'-8"	S3X5.7 3'-8"	S3X5.7 3'-8"	S3X5.7 3'-8"	S3X5.7 3'-8"	S4X9.5 3'-8"	S4X9.5 3'-8"	S3X5.7 3'-8"	S3X5.7 3'-8"	S3X5.7 3'-8"	S4X9.5 3'-8"	S4X9.5 3'-8"	S4X9.5 3'-8"	S4X9.5 3'-8"	S4X9.5 3'-8"
2'-0"	3"Ø 3'-8"	3"Ø 3'-8"	3"Ø 3'-8"	3"Ø 3'-8"	3"Ø 3'-8"	S3X5.7 3'-8"	S3X5.7 3'-8"	S3X5.7 3'-8"	S3X5.7 3'-8"	S3X5.7 3'-8"	S4X9.5 3'-8"	S4X9.5 3'-8"	S4X9.5 3'-8"	S4X9.5 3'-8"	S4X9.5 3'-8"	S4X9.5 3'-8"	S4X9.5 3'-8"	S4X9.5 3'-8"	S4X9.5 3'-8"	S4X9.5 3'-8"	S4X9.5 3'-8"	S4X9.5 3'-8"	S4X9.5 3'-8"	S4X9.5 3'-8"
2'-6"	3"Ø 3'-8"	3"Ø 3'-8"	3"Ø 3'-8"	3"Ø 3'-8"	3"Ø 3'-8"	S3X5.7 3'-8"	S3X5.7 3'-8"	S3X5.7 3'-8"	S4X9.5 3'-8"	S4X9.5 3'-8"	S4X9.5 3'-8"	S4X9.5 3'-8"	S4X9.5 3'-8"	S4X9.5 3'-8"	S4X9.5 3'-8"	S4X9.5 3'-8"	S4X9.5 3'-8"	S4X9.5 3'-8"	S4X9.5 3'-8"	S4X9.5 3'-8"	S4X9.5 3'-8"	S6X12.5 3'-8"	S6X12.5 3'-8"	S6X12.5 3'-8"
3'-0"	3"Ø 3'-8"	3"Ø 3'-8"	3"Ø 3'-8"	3"Ø 3'-8"	4"Ø 3'-8"	S3X5.7 3'-8"	S3X5.7 3'-8"	S4X9.5 3'-8"	S4X9.5 3'-8"	S4X9.5 3'-8"	S4X9.5 3'-8"	S4X9.5 3'-8"	S4X9.5 3'-8"	S6X12.5 3'-8"	S6X12.5 3'-8"	S6X12.5 3'-8"	S4X9.5 3'-8"	S4X9.5 3'-8"	S4X9.5 3'-8"	S6X12.5 3'-8"	S6X12.5 3'-8"	S6X12.5 3'-8"	S6X12.5 3'-8"	S6X12.5 3'-8"
4'-0"	3"Ø 3'-8"	3"Ø 3'-8"	3"Ø 3'-6"	4"Ø 3'-6"	4"Ø 3'-6"	S4X9.5 3'-6"	S4X9.5 3'-6"	S4X9.5 3'-6"	S4X9.5 4'-8"	S4X9.5 3'-6"	S6X12.5 3'-6"	S6X12.5 3'-6"	S6X12.5 3'-6"	S6X12.5 3'-6"	S6X12.5 3'-6"	S6X12.5 3'-6"	S6X12.5 3'-6"	S6X12.5 3'-6"	S6X12.5 3'-8"	S6X12.5 3'-6"	S6X12.5 3'-6"	S6X12.5 3'-6"	S6X12.5 3'-6"	S6X12.5 3'-6"
5'-0"	3"Ø 3'-8"	3"Ø 3'-8"	4"Ø 3'-6"	4"Ø 3'-6"	5"Ø 3'-6"	S4X9.5 3'-6"	S4X9.5 4'-8"	S4X9.5 4'-8"	S6X12.5 4'-6"	S6X12.5 4'-8"	S6X12.5 3'-6"	S6X12.5 3'-6"	S6X12.5 3'-6"	S6X12.5 3'-6"	S6X12.5 4'-8"	S6X12.5 4'-8"	S6X12.5 3'-6"	S6X12.5 3'-6"	S6X12.5 3'-6"	S6X12.5 4'-8"	S6X12.5 4'-8"	S6X12.5 4'-8"	S6X12.5 4'-8"	S6X17.5 4'-8"
6'-0"	3"Ø 3'-8"	4"Ø 3'-8"	4"Ø 3'-8"	5"Ø 3'-8"	5"Ø 3'-8"	S4X9.5 4'-8"	S6X12.5 4'-8"	S6X12.5 4'-6"	S6X12.5 3'-8"	S6X12.5 3'-6"	S6X12.5 3'-6"	S6X12.5 4'-8"	S6X12.5 3'-8"	S6X12.5 3'-6"	S6X17.5 4'-8"	S6X17.5 4'-8"	S6X12.5 3'-6"	S6X12.5 4'-8"	S6X12.5 4'-8"	S6X17.5 4'-8"	S6X17.5 4'-8"	S6X17.5 4'-6"	S6X18.4 4'-6"	S6X18.4 4'-6"
7'-0"	3"Ø 3'-8"	4"Ø 3'-8"	4"Ø 3'-8"	5"Ø 3'-8"	5"Ø 3'-6"	S6X12.5 4'-8"	S6X12.5 3'-8"	S6X12.5 3'-6"	S6X12.5 3'-6"	S6X12.5 3'-6"	S6X12.5 4'-8"	S6X17.5 4'-8"	S6X17.5 4'-8"	S8X18.4 4'-6"	S8X18.4 4'-6"	S8X18.4 4'-6"	S6X17.5 4'-8"	S6X17.5 4'-8"	S8X18.4 4'-6"	S8X18.4 4'-6"	S8X18.4 5'-8"	S8X18.4 4'-6"	S8X18.4 5'-8"	S8X18.4 5'-8"
8'-0"	3"Ø 3'-8"	4"Ø 3'-8"	5"Ø 3'-8"	5"Ø 3'-6"	6"Ø 4'-8"	S6X12.5 3'-8"	S6X12.5 3'-6"	S6X12.5 3'-6"	S6X12.5 4'-8"	S6X12.5 4'-8"	S6X17.5 4'-6"	S8X18.4 4'-6"	S8X18.4 4'-6"	S8X18.4 5'-8"	S8X18.4 5'-8"	S8X18.4 5'-6"	S8X18.4 4'-6"	S8X18.4 5'-6"	S8X18.4 4'-6"	S8X18.4 5'-8"	S8X18.4 5'-8"	S8X18.4 5'-6"	S8X18.4 5'-6"	S8X18.4 5'-6"
9'-0"	3"Ø 3'-8"	4"Ø 3'-8"	5"Ø 3'-6"	6"Ø 4'-8"	6"Ø 4'-8"	S6X12.5 3'-6"	S6X12.5 3'-6"	S6X12.5 4'-8"	S6X17.5 4'-8"	S6X17.5 4'-6"	S8X18.4 4'-6"	S8X18.4 5'-8"	S8X18.4 5'-8"	S8X18.4 5'-6"	S8X18.4 5'-6"	S8X18.4 5'-6"	S8X18.4 5'-6"	S8X18.4 5'-8"	S8X18.4 5'-8"	S8X18.4 5'-8"	S8X18.4 5'-8"	S8X18.4 5'-6"	W10X19.8 5'-6"	W10X19.8 6'-8"
10'-0"	3"Ø 3'-8"	5"Ø 3'-8"	5"Ø 3'-6"	6"Ø 4'-8"	6"Ø 4'-6"	S6X12.5 3'-6"	S6X12.5 4'-8"	S6X17.5 4'-8"	S6X17.5 4'-6"	S8X18.4 5'-8"	S8X18.4 5'-6"	S8X18.4 5'-6"	S8X18.4 5'-6"	W8X18.4 6'-8"	W10X19.8 6'-8"	W10X19.8 6'-6"	S8X18.4 5'-6"	S8X18.4 5'-6"	S8X18.4 6'-8"	S8X18.4 6'-8"	W10X19.8 6'-6"	W10X19.8 6'-6"	W10X19.8 6'-6"	W10X19.8 6'-6"
11'-0"	4"Ø 3'-8"	5"Ø 3'-8"	6"Ø 3'-6"	6"Ø 4'-6"	8"Ø 5'-8"	S6X12.5 4'-8"	S6X17.5 4'-6"	S6X17.5 4'-6"	S8X18.4 5'-8"	S8X18.4 5'-8"	S8X18.4 5'-6"	S8X18.4 5'-6"	W10X19.8 6'-8"	W10X19.8 6'-8"	W10X19.8 6'-8"	W10X19.8 6'-6"	S8X18.4 5'-8"	S8X18.4 5'-8"	W10X19.8 6'-8"	W10X19.8 6'-6"	W10X19.8 6'-6"	W10X19.8 6'-6"	W10X19.8 7'-8"	W10X22.8 7'-8"
12'-0"	4"Ø 3'-8"	5"Ø 3'-8"	6"Ø 4'-8"	6"Ø 4'-6"	8"Ø 5'-8"	S6X12.5 4'-8"	S6X17.5 4'-6"	S6X18.4 4'-6"	S8X18.4 5'-8"	S8X18.4 5'-8"	S8X18.4 5'-6"	W10X19.8 6'-8"	W10X19.8 6'-8"	W10X19.8 6'-8"	W10X22.8 6'-8"	W10X22.8 7'-8"	W10X19.8 5'-8"	W10X19.8 6'-8"	W10X19.8 6'-8"	W10X19.8 6'-6"	W10X19.8 6'-6"	W10X22.8 7'-8"	W10X22.8 7'-8"	W10X22.8 7'-8"
13'-0"	4"Ø 3'-8"	5"Ø 3'-6"	6"Ø 4'-8"	8"Ø 5'-8"	8"Ø 5'-6"	S6X17.5 4'-8"	S8X18.4 4'-6"	S8X18.4 5'-8"	S8X18.4 5'-8"	S8X18.4 5'-6"	W10X19.8 6'-8"	W10X19.8 6'-8"	W10X19.8 6'-8"	W10X22.8 6'-8"	W10X22.8 7'-8"	W10X22.8 7'-8"	W10X19.8 6'-8"	W10X19.8 6'-8"	W10X19.8 6'-6"	W10X22.8 6'-6"	W10X22.8 7'-8"	W10X22.8 7'-8"	W10X22.8 7'-8"	W10X22.8 7'-6"
14'-0"	4"Ø 3'-8"	5"Ø 3'-6"	6"Ø 4'-6"	8"Ø 5'-8"	8"Ø 5'-6"	S6X17.5 4'-6"	S8X18.4 5'-8"	S8X18.4 5'-8"	S8X18.4 5'-6"	W10X19.8 6'-8"	W10X19.8 6'-8"	W10X19.8 6'-8"	W10X22.8 6'-8"	W10X22.8 7'-8"	W10X26.8 7'-6"	W10X26.8 7'-6"	W10X19.8 6'-8"	W10X22.8 6'-6"	W10X22.8 7'-8"	W10X22.8 7'-8"	W10X26.8 7'-6"	W10X26.8 7'-6"	W10X26.8 7'-6"	W10X30.8 8'-8"
15'-0"	4"Ø 3'-8"	6"Ø 3'-6"	6"Ø 4'-6"	8"Ø 5'-8"	8"Ø 6'-8"	S8X18.4 4'-6"	S8X18.4 5'-8"	S8X18.4 5'-6"	S8X18.4 5'-6"	W10X19.8 6'-8"	W10X19.8 6'-6"	W10X22.8 6'-6"	W10X22.8 7'-8"	W10X26.8 7'-6"	W10X30.8 7'-6"	W10X30.8 8'-8"	W10X22.8 6'-6"	W10X22.8 7'-8"	W10X26.8 7'-6"	W10X26.8 7'-6"	W10X30.8 8'-8"	W10X30.8 8'-8"	W10X30.8 8'-8"	W10X30.8 8'-8"
16'-0"	4"Ø 3'-8"	6"Ø 4'-8"	8"Ø 4'-6"	8"Ø 5'-8"	8"Ø 6'-8"	S8X18.4 5'-8"	S8X18.4 5'-8"	S8X18.4 5'-6"	W10X19.8 6'-8"	W10X19.8 6'-6"	W10X22.8 6'-6"	W10X22.8 7'-8"	W10X26.8 7'-8"	W10X30.8 7'-6"	W10X30.8 8'-8"	W10X36.8 8'-6"	W10X22.8 7'-8"	W10X22.8 7'-8"	W10X26.8 7'-8"	W10X26.8 7'-6"	W10X30.8 8'-8"	W10X30.8 8'-8"	W10X30.8 8'-8"	W10X36.8 8'-6"

USE 10' WIDTH IF SIZE FALLS IN THIS AREA

WIDTH W	SPACING FOR POSTS
1'- 5'	ONE POST
6'	1'- 4'- 1'
7'	1'- 5'- 1'
8'	1'- 6'- 1'
9'	1'- 7'- 1'
10'	1'- 8'- 1'
11'	1.5'- 8'- 1.5'
12'	2'- 8'- 2'
13'	2.5'- 8'- 2.5'
14'	3'- 8'- 3'
15'	3.5'- 8'- 3.5'
16'	4'- 8'- 4'
17'	1'- 7.5'- 7.5'- 1'
18'	1'- 8'- 8'- 1'
19'	1.5'- 8'- 8'- 1.5'
20'	2'- 8'- 8'- 2'
21'	2.5'- 8'- 8'- 2.5'
22'	3'- 8'- 8'- 3'
23'	3.5'- 8'- 8'- 3.5'
24'	4'- 8'- 8'- 4'

( ) REPRESENTS ONE POST

REVISIONS

NO.	DATE	APPR.	REMARKS

UTAH DEPARTMENT OF TRANSPORTATION
STANDARD DRAWINGS FOR ROAD AND BRIDGE CONSTRUCTION
SALT LAKE CITY, UTAH

RECOMMENDED FOR APPROVAL — JULY 03,2002 DATE

CHAIRMAN STANDARDS COMMITTEE
APPROVED — JULY 03,2002 DATE

DEPUTY DIRECTOR

GROUND MOUNTED SIGNS INSTALLATION DETAILS

STANDARD DRAWING TITLE

STD DWG
SN 12A

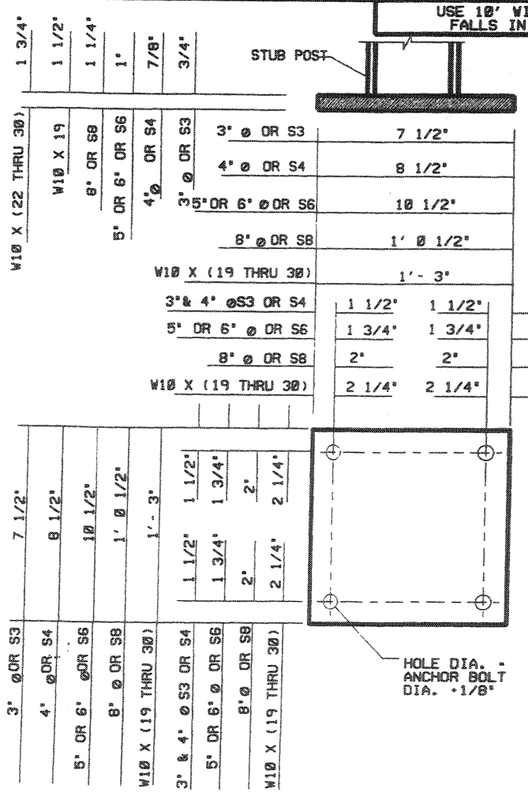

FOOTING DETAILS

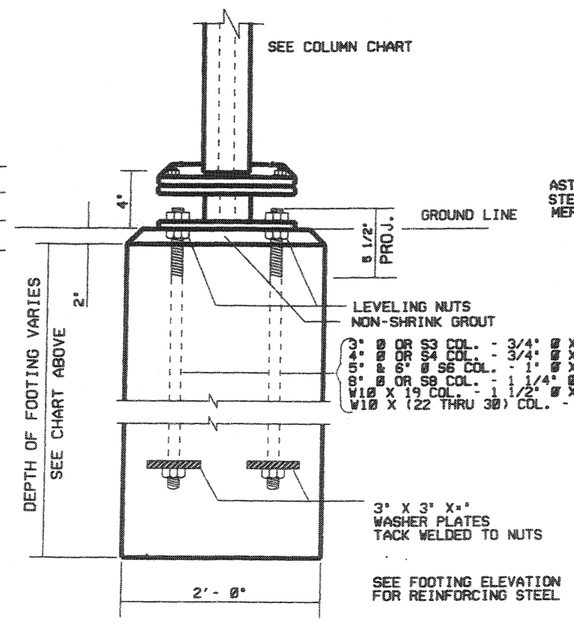

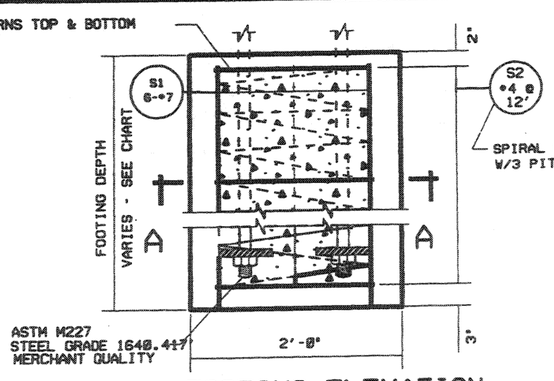

FOOTING ELEVATION

BAR	LENGTH
S1	FOOTING HEIGHT- 2"
S2	7'- 0"

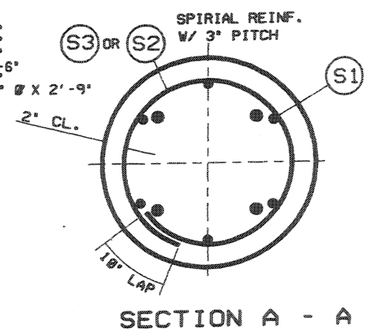

SECTION A - A

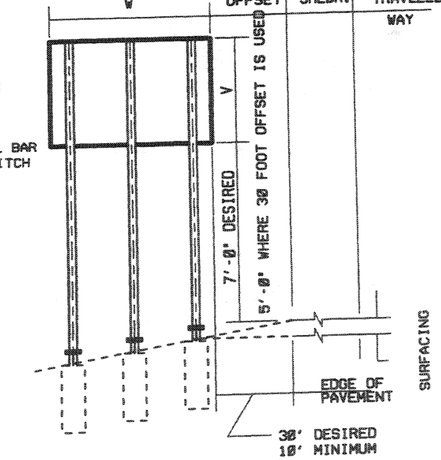

REAR ELEVATION

NOTES:

1. ENTER CHART WITH KNOWN HORIZONTAL AND VERTICAL DIMENSIONS OF SIGN. PROCEED HORIZONTALLY AND VERTICALLY FROM GIVEN DIMENSIONS TO INTERSECTING SQUARE WHICH GIVES IN ORDER, TOP: NUMBER, SIZE AND WEIGHT OF SUPPORT SECTION OR OF STANDARD STRENGTH PIPE COLUMNS, BOTTOM: MINIMUM REQUIRED DEPTH OF FOOTING.
2. SEE STD DWG SN 6 FOR MATERIAL SPECIFICATIONS NOT GIVEN AND GENERAL NOTES.
3. DO NOT ATTACH SIGNS BELOW HINGE POINT.

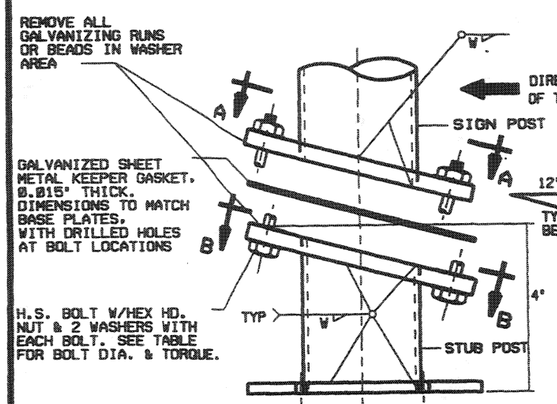

SIGN POST & STUB POST ELEVATION
(FOR PIPE COLUMNS)

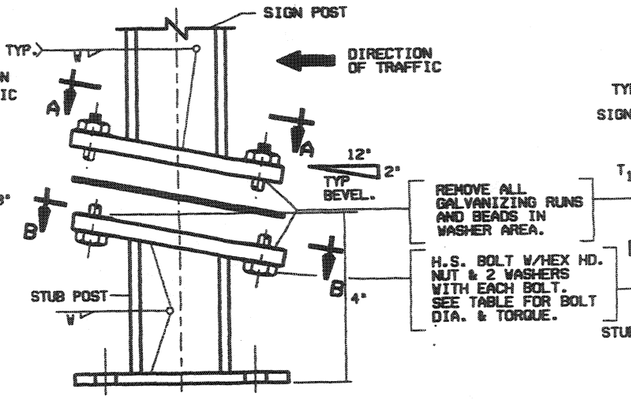

SIGN POST & STUB POST ELEVATION
(FOR S3 & S4 SECTIONS)

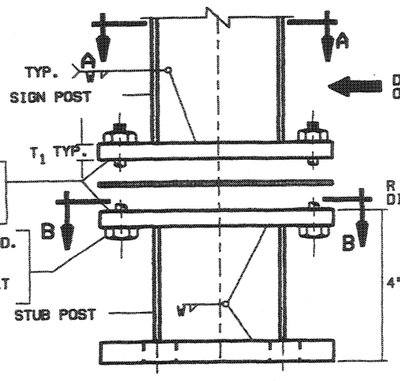

SIGN POST & STUB POST ELEVATION
(FOR S6, S8 & W10 SECTIONS)

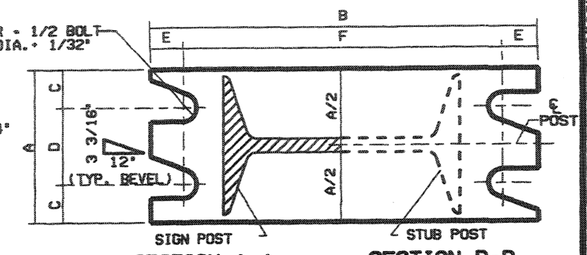

SECTION A-A SECTION B-B
(SEE TABLE FOR DIMENSIONS)

SECTIONS SHOWN ARE FOR INSTALLATIONS ON RIGHT SHOULDER AND IN GORE. PLATE SLOT BEVELS ARE OPPOSITE HAND FROM THAT SHOWN FOR INSTALLATION ON LEFT SHOULDER 'S' POST IS SHOWN, PIPE POST SELECTIONS ARE SIMILAR.

BASE CONNECTION DATA TABLE

POST SIZE	BOLT SIZE & TORQUE	A	B	C	D	E	F	T_1	W
S3 X 5.7	1/2" DIA.X 2 1/2" 18 FT.-LB. TORQUE	3"	7 1/2"	3/4"	1 1/2"	3/4"	6"	5/8"	3/16"
S4 X 9.5		3 1/2"	7 1/2"	3/4"	2"	3/4"	6"	5/8"	1/4"
S6 X 12.5	5/8" DIA. X 3" 24 FT.-LB. TORQUE	4 1/2"	10"	1 1/8"	2 1/4"	3/4"	8 1/2"	3/4"	5/16"
S6 X 17.5		4 1/2"	10"	1 1/8"	2 1/4"	3/4"	8 1/2"	3/4"	5/16"
S8 X 18.4		5"	12"	1 1/8"	2 3/4"	3/4"	10 1/2"	3/4"	5/16"
W10 X 19.0	3/4" DIA.X 3 1/2" 38 FT.-LB. TORQUE	6"	1'-2 1/2"	1 1/4"	3 1/2"	7/8"	1'-0 3/4"	1"	5/16"
W10 X 22.0		7"	1'-3"	1 1/2"	4"	7/8"	1'-1 1/4"	1"	5/16"
W10 X 26.0		7"	1'-3"	1 1/2"	4"	7/8"	1'-1 1/4"	1"	5/16"
W10 X 30.0	1" DIA.X 3 1/2" 51 FT.-LB. TORQUE	7"	1'-3"	1 1/2"	4"	7/8"	1' 1 1/4"	1 1/8"	5/16"
3" DIA. STD. PIPE	1/2" DIA.X 2 1/2" 18 FT.-LB. TORQUE	4 1/2"	7 1/2"	1"	2 1/2"	3/4"	6"	3/4"	1/4"
4" DIA. STD. PIPE		5 1/2"	8 1/2"	1"	3 1/2"	3/4"	7"	3/4"	1/4"
5" DIA. STD. PIPE	5/8" DIA.X 3 1/2" 24 FT.-LB. TORQUE	6 1/2"	10 1/4"	1 1/4"	4"	7/8"	8 1/2"	1"	1/4"
6" DIA. STD. PIPE		7 1/2"	11 1/2"	1 1/4"	5"	7/8"	9 3/4"	1"	5/16"
8" DIA. STD. PIPE		9 1/2"	1'-2"	1 1/4"	7"	7/8"	1'-8 1/4"	1"	5/16"

FUSE PLATE DATA TABLE

F	G	H	J	K	L	N	T_2	D_1	BOLT DIA.
3 7/16"	2 1/4"	1 1/8"	2 3/8"	1 1/2"	7/16"	1/2"	1/4"	9/16"	1/2"
3 7/16"	2 1/4"	1 1/8"	2 3/4"	1 1/2"	5/8"	1/2"	5/16"	9/16"	1/2"
4 3/8"	2 1/2"	1 1/4"	3 3/8"	2"	11/16"	5/8"	3/8"	9/16"	1/2"
4 3/8"	2 1/2"	1 1/4"	3 5/8"	2"	13/16"	5/8"	3/8"	11/16"	5/8"
4 3/8"	2 1/2"	1 1/4"	4"	2 1/4"	7/8"	5/8"	7/16"	13/16"	3/4"
6"	3"	1 1/2"	4"	2 1/4"	7/8"	3/4"	3/8"	15/16"	3/4"
6"	3"	1 1/2"	5 3/4"	3 3/4"	1"	7/8"	3/8"	15/16"	7/8"
6"	3"	1 1/2"	5 3/4"	3 3/4"	1"	7/8"	7/16"	15/16"	7/8"
6"	3"	1 1/2"	5 3/4"	3 3/4"	1"	7/8"	1/2"	15/16"	7/8"
NO FUSE PLATE REQUIRED ON PIPE COLUMN									

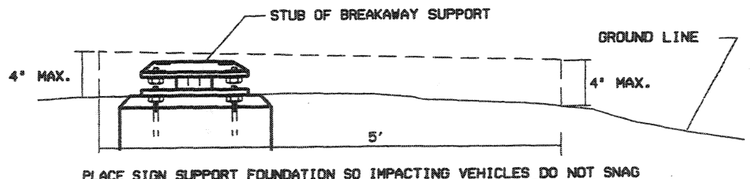

PLACE SIGN SUPPORT FOUNDATION SO IMPACTING VEHICLES DO NOT SNAG ON EITHER FOUNDATION OR ANY SUBSTANTIAL REMAINS OF SIGN SUPPORT. GRADE SURROUNDING TERRAIN TO PERMIT IMPACTING VEHICLES TO PASS OVER FOUNDATION AND PORTIONS OF SIGN SUPPORTS WHICH REMAIN IN THE GROUND OR ARE RIGIDLY ATTACHED TO THE FOUNDATION.

BREAKAWAY SUPPORT STUB HEIGHT MEASUREMENT

NOTES:

1. CONFORM TO THE LATEST EDITION OF AASHTO STANDARD SPECIFICATION FOR STRUCTURAL SUPPORTS FOR HIGHWAY SIGNS, LUMINAIRES AND TRAFFIC SIGNALS.
2. FABRICATE BASE, SLIP AND FUSE PLATES FROM STEEL MEETING THE REQUIREMENTS SPECIFIED FOR THE SIGN POST TO WHICH THEY ARE ATTACHED EXCEPT WHERE PIPE POST ARE USED. IN WHICH CASE CONFORM TO THE REQUIREMENTS OF ASTM A 36.
3. USE STRUCTURAL STEEL THAT IS STRUCTURAL CARBON STEEL CONFORMING TO THE FOLLOWING ASTM DESIGNATIONS: STANDARD PIPE 3"-8" DIA. ASTM A 53 GRADE B. W AND S SHAPES ASTM A 36.
4. USE BOLTS, NUTS AND WASHERS CONFORMING TO ASTM A 325 AND CADMIUM ELECTRO PLATING CONFORMING TO ASTM A 165 NS.
5. WELD TO THE REQUIREMENTS OF THE AASHTO STANDARD SPECIFICATION FOR WELDING OF STRUCTURAL STEEL HIGHWAY BRIDGES.
6. SAW CUTTING ALL PLATE CUTS IS PREFERRED. FLAME CUTTING WILL BE PERMITTED PROVIDED ALL EDGES ARE GROUND. METAL PROJECTING BEYOND THE PLATE FACE WILL NOT BE TOLERATED.
7. GALVANIZE ALL STRUCTURAL STEEL AFTER FABRICATION IN CONFORMANCE TO AASHTO M 111 (ASTM A 123).
8. TIGHTEN HIGH STRENGTH BOLTS IN THE BASE CONNECTION ONLY TO THE TORQUE LIMITS SHOWN IN THE TABLE. DO NOT OVER TIGHTEN.
9. TIGHTEN ALL HIGH STRENGTH FRICTION FUSE BOLTS IN THE SHOP. USE DIRECT- TENSION INDICATOR WASHERS TO TIGHTEN THE BOLTS. SEE STANDARD SPECIFICATION SECTION 05120 ARTICLE 3.2 PARAGRAPH C.
10. MOUNT ALL SIGNS DESIGNATED FOR MOUNTING WITH BREAKAWAY BASES ON UNDIVIDED HIGHWAYS OR ON DIVIDED HIGHWAYS OF LESS THAN FOUR LANES WITH BREAKAWAYS PLATES PARALLEL TO THE BASE PLATES.

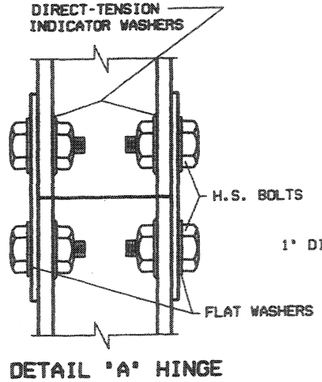

DETAIL 'A' HINGE

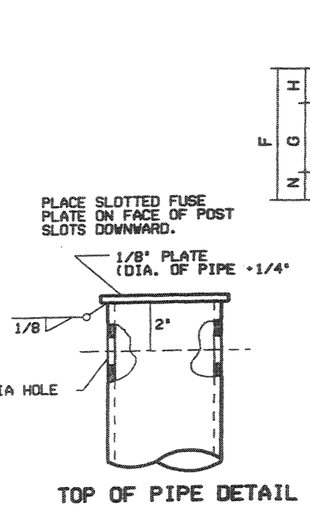

TOP OF PIPE DETAIL

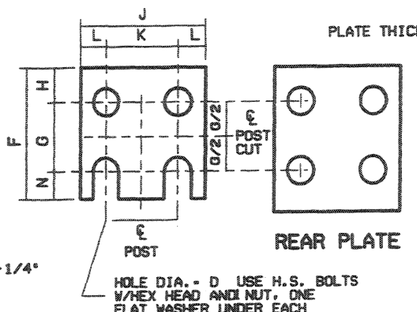

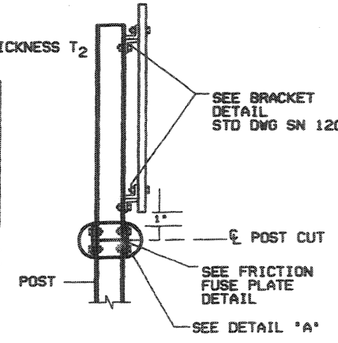

FUSE PLATE DETAIL
(SEE TABLE FOR DIMENSIONS)

REVISIONS				
NO.	DATE	APPR.	REMARKS	
1	04/24/03	F.M.	FUSE PLATE DETAIL, SIDE VIEW CORRECTED	
			STANDARD DRAWING CALLOUT	

UTAH DEPARTMENT OF TRANSPORTATION
STANDARD DRAWINGS FOR ROAD AND BRIDGE CONSTRUCTION
SALT LAKE CITY, UTAH

RECOMMENDED FOR APPROVAL — APRIL 21, 2003 DATE
CHAIRMAN STANDARDS COMMITTEE APPROVED — APRIL 24, 2003 DATE
DEPUTY DIRECTOR

GROUND MOUNTED SIGN INSTALLATION DETAILS
STANDARD DRAWING TITLE

STD DWG
SN 12B

DGN FILE: S:\ENG\STANDARD_DRAWINGS\IMPERIAL\APPROVED\SIGNS (SN)\SN12B.DGN
27-2003

NOTES:

1. SEE STD DWG SN 6 FOR GENERAL NOTES.
2. USE 18-8 STAINLESS STEEL FOR THE ⅜" R.H. MACHINE SCREWS AND WASHERS AND THE ⅜" BOLTS AND WASHERS USED ON THE SIGN FACE. USE CADMIUM ELECTROPLATING CONFORMING TO ASTM B 766 FOR ALL OTHER BOLTS, NUTS AND WASHERS.
3. SHOP GALVANIZE THE ENTIRE SIGN BRACING ASSEMBLY, STEEL SIGN POST AND U-BOLTS TO MEET AASHTO M 111 (ASTM A 123).
4. USE ASTM A 107, GRADE 1020 MERCHANT QUALITY FOR U-BOLT.
5. USE BOTH ⅜" FLAT WASHERS AND ⅜" LOCK WASHERS ON ALL ⅜" R.H. SCREWS. USE LOCK WASHERS ON ALL BOLTS.

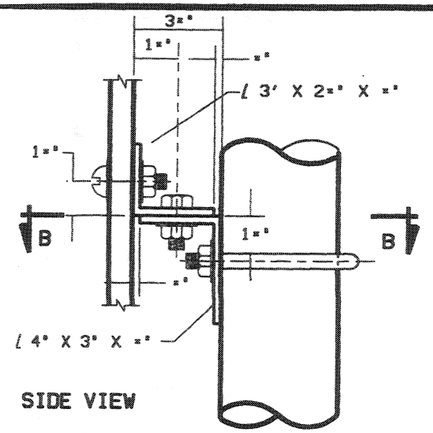

SIDE VIEW

BRACKET DETAIL
(FOR PIPE COLUMNS)

PLACE CORNER SCREWS AS NEAR THE END OF THE ANGLE AS POSSIBLE MAINTAINING A ⅜" CLEARANCE FROM THE ANGLE EDGE AND AVOIDING CONFLICT WITH THE BORDER MAETRIAL.

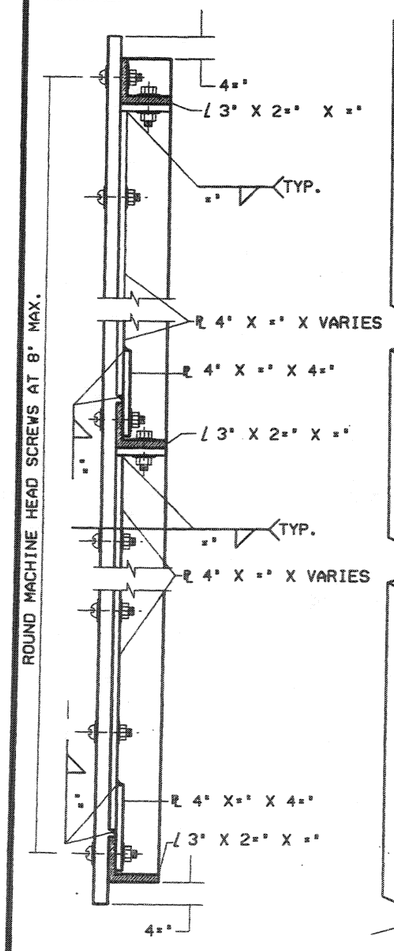

SECTION A-A

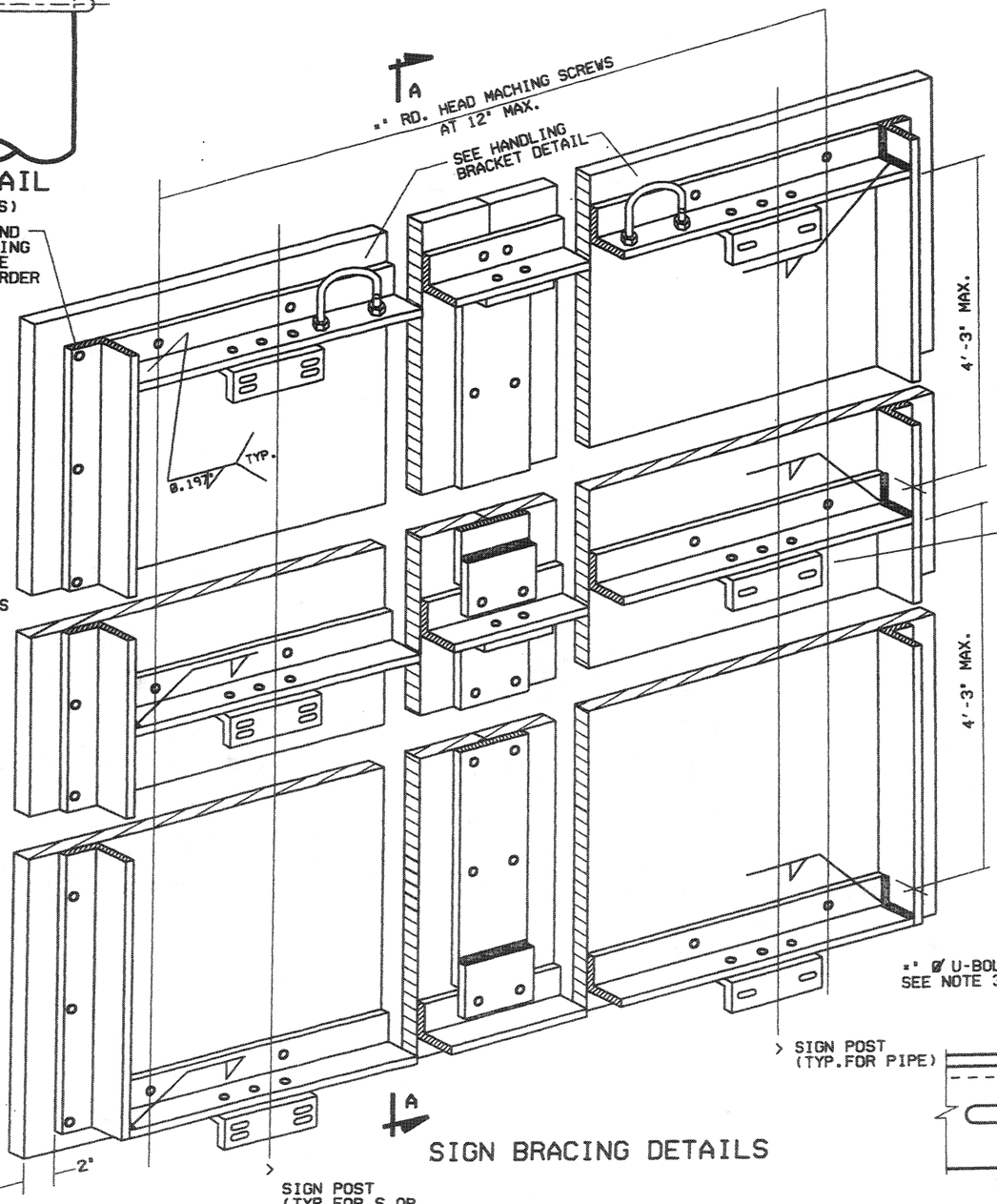

SIGN BRACING DETAILS

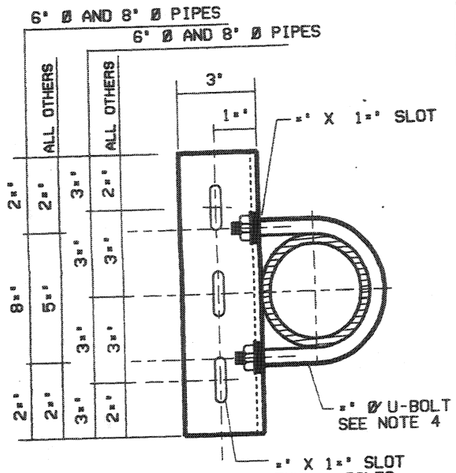

SECTION B-B

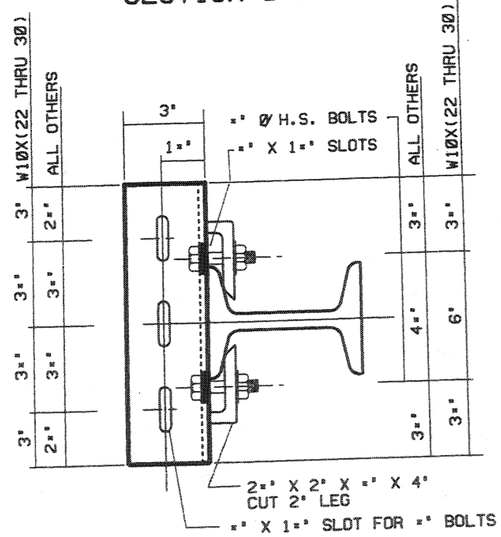

SECTION C-C

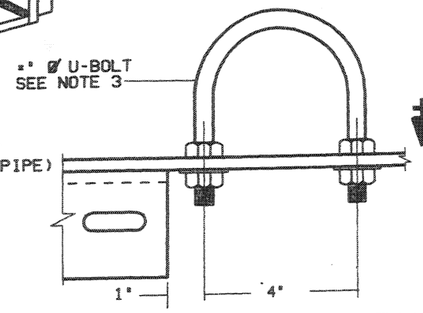

HANDLING BRACKET DETAIL

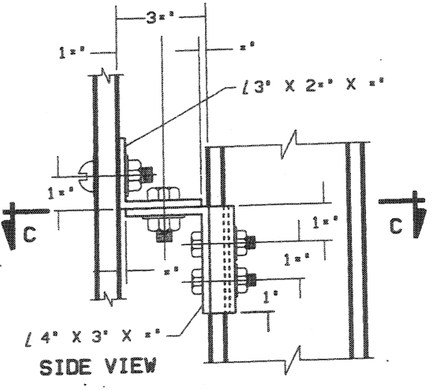

SIDE VIEW

BRACKET DETAIL
(FOR S OR W COLUMNS)

REVISIONS

NO.	DATE	APPR.	REMARKS

UTAH DEPARTMENT OF TRANSPORTATION
STANDARD DRAWINGS FOR ROAD AND BRIDGE CONSTRUCTION
SALT LAKE CITY, UTAH

RECOMMENDED FOR APPROVAL — JULY 03,2002 DATE

CHAIRMAN STANDARDS COMMITTEE APPROVED — JULY 03,2002 DATE

DEPUTY DIRECTOR

GROUND MOUNTED SIGN INSTALLATION DETAILS

STANDARD DRAWING TITLE

STD DWG
SN 12C

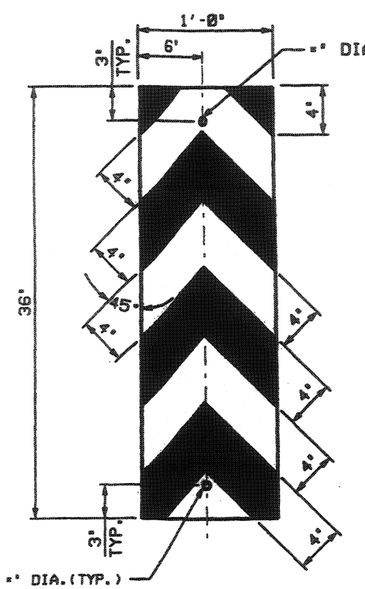

TRAFFIC PASS EITHER SIDE
OM-3C

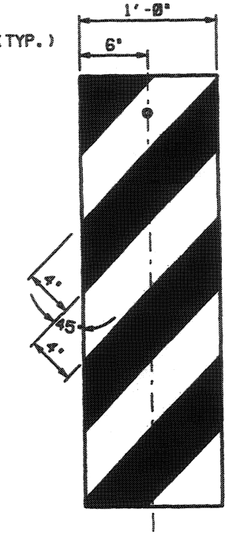

TRAFFIC PASS LEFT
OM-3R

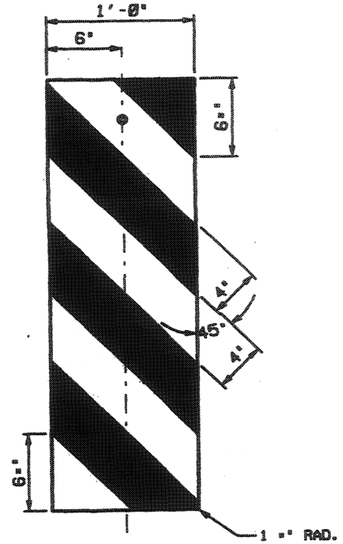

TRAFFIC PASS RIGHT
OM-3L

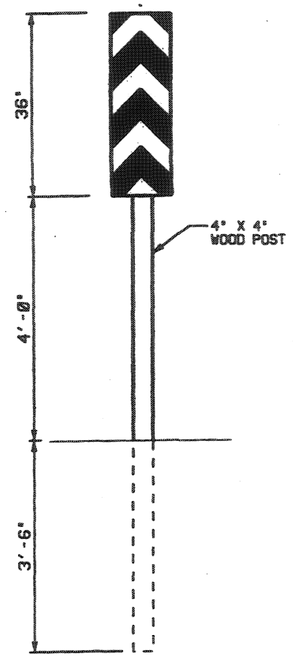

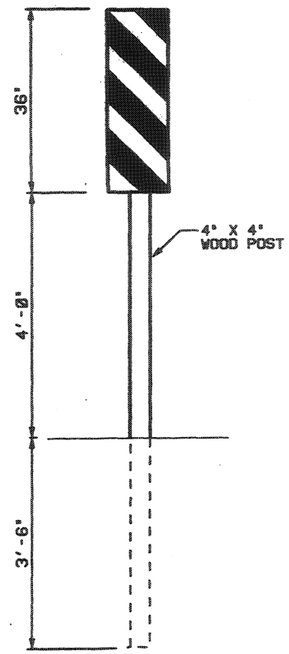

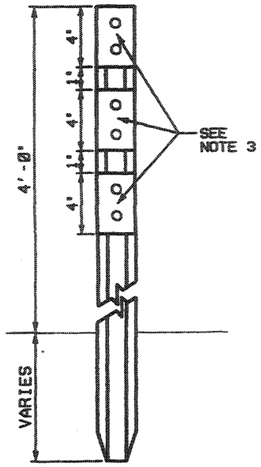

BARRIER MARKER
SEE NOTE 2

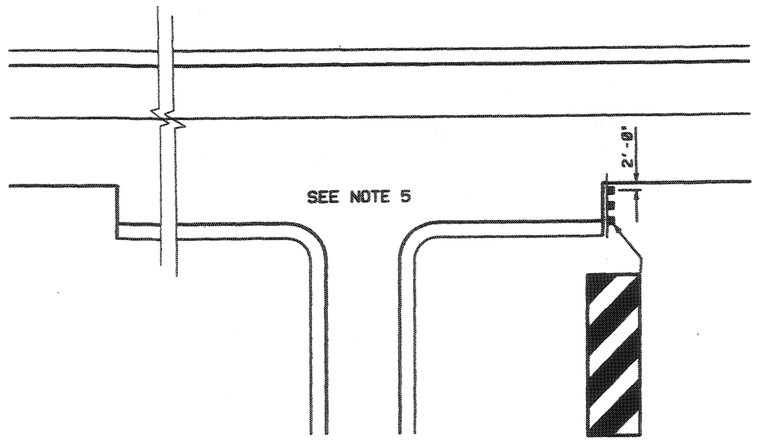

PAVEMENT TRANSITION

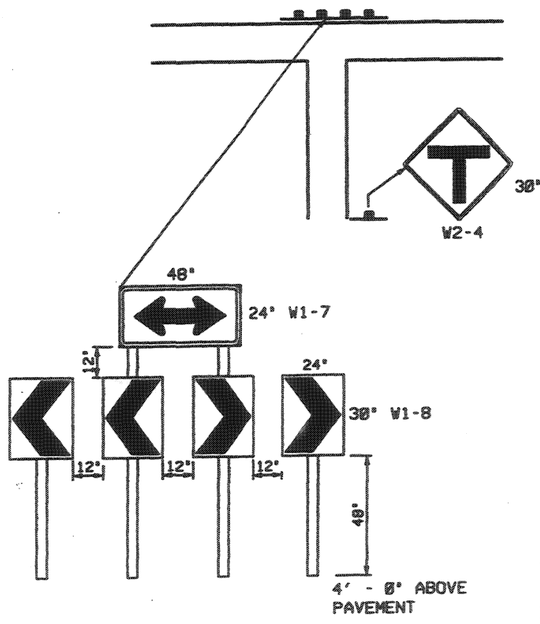

'T' INTERSECTION GUIDANCE

NOTES:

1. USE OM-3C, OM-3R, OR OM-3L TO MARK THE ENDS OF OBSTRUCTIONS SUCH AS NARROW BRIDGES,CULVERTS,ETC. FOR NARROW BRIDGES INSTALL THE MARKER ON EACH SIDE OF BOTH ENDS OF BRIDGE ON TWO-WAY ROADWAYS, AND ON EACH SIDE OF THE APPROACH END OF BRIDGE ON ONE-WAY ROADWAYS.
2. USE BARRIER MARKER TO MARK THE APPROACH TO THE ENDS OF BARRIERS THAT DO NOT HAVE AN ATTENUATOR OR END SECTION INSTALLED.
3. USE REFLECTIVE SHEETING CONFORMING TO SECTION 02891 OF THE STATE OF UTACH STANDARD SPECIFICATIONS FOR ROAD AND BRIDGE CONSTRUCTION. USE REFLECTIVE YELLOW SHEETING OVER NON-REFLECTIVE BLACK SHEETING.
4. INSTALL THREE YELLOW DELINEATOR PLATES IN ACCORDANCE WITH STD DWG GW 9.
5. ATTACH CHEVRON ALIGNMENT PANELS & OBJECT MARKERS TO POST WITH VANDAL RESISTANT FASTENERS.
6. THE TRAFFIC ENGINEER DETERMINES PAVEMENT MARKINGS AND STRIPING FOR PAVEMENT TRANSITION.

REVISIONS

NO.	DATE	APPR.	REMARKS
1	00/00/02	G.S.	CORRECTED NOTE IN "PAVEMENT TRANSITION" 8" TO 6"

UTAH DEPARTMENT OF TRANSPORTATION
STANDARD DRAWINGS FOR ROAD AND BRIDGE CONSTRUCTION
SALT LAKE CITY, UTAH

RECOMMENDED FOR APPROVAL — DEC.19,2002 DATE

CHAIRMAN STANDARDS COMMITTEE APPROVED — DEC.19,2002 DATE

DEPUTY DIRECTOR

OBJECT MARKERS
'T' INTERSECTION & PAVEMENT TRANSITION GUIDANCE
STANDARD DRAWING TITLE

STD DWG
ST 1

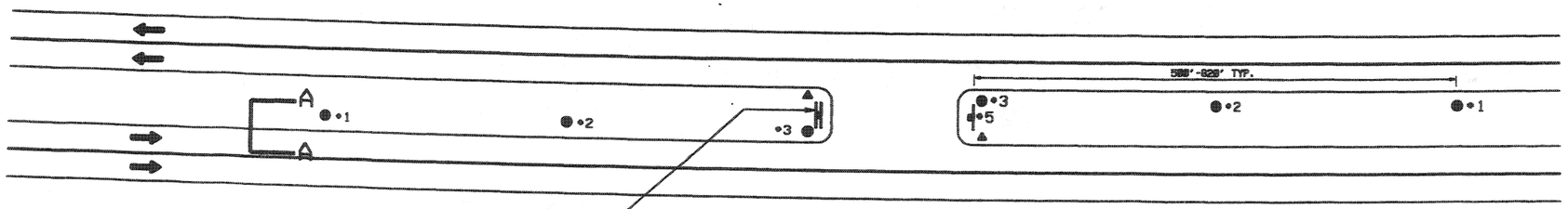

FREEWAY CROSSOVER

LEGEND

● - WHITE FLEXIBLE GUIDE POST

▲ - TYPE II DELINEATOR

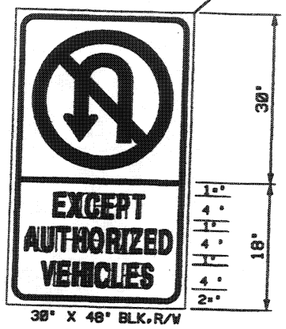

30" X 48" BLK.R/W

SIGN
R3-4

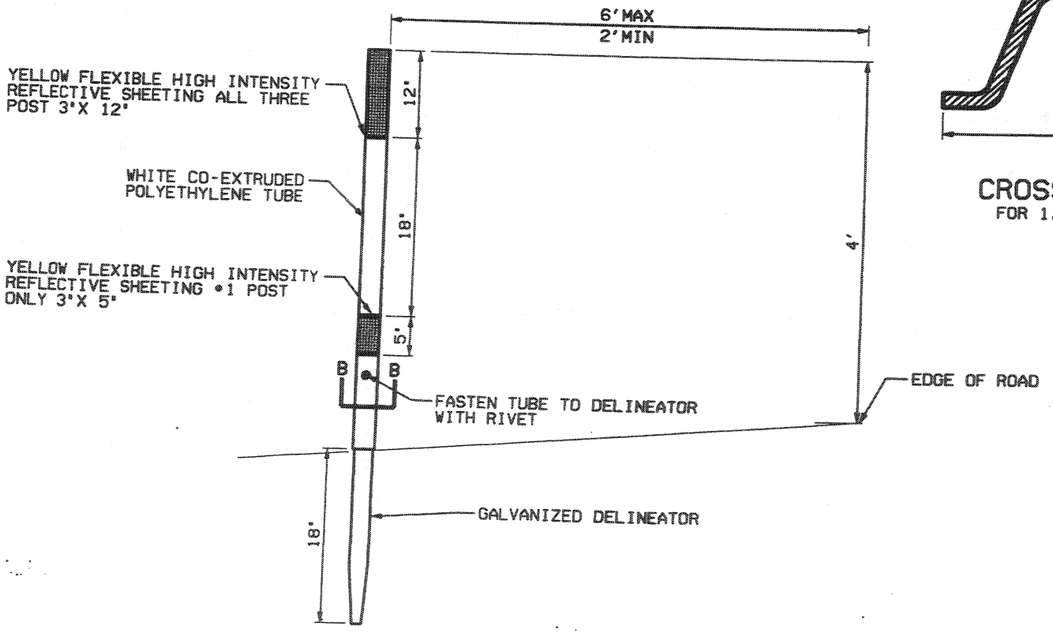

SECTION A-A

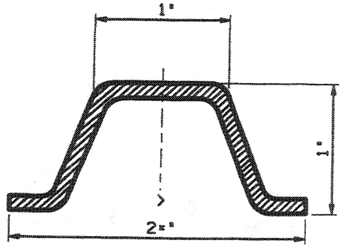

CROSS SECTION
FOR 1.2 LB/FT POST

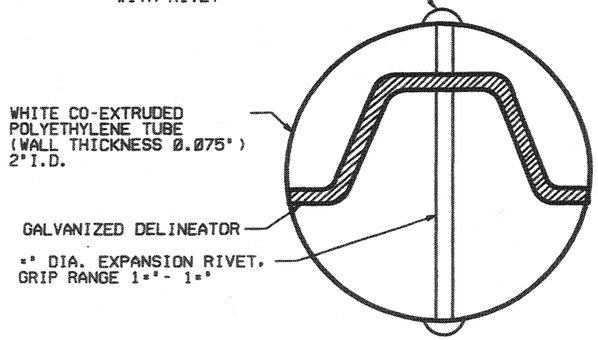

SECTION B-B
SEE NOTES 2,3

NOTES:

1. USE EXISTING DELINEATOR SPACING WHEN POSSIBLE.
   POST •2 SPACED EVENLY BETWEEN POST •1 & •3
   POST •3 PLACE 10 FEET IN ADVANCE OF POINT OF TANGENCY.
2. USE GALVANIZED STEEL POST WITH •" HOLES ON 1" SPACING, FULL LENGTH OF POST. ATTACH WHITE POLYETHYLENE TUBE WITH REFLECTIVE SHEETING AS SHOWN.
3. USE OTHER APPROPRIATE WHITE FLEXIBLE GUIDE POST UPON APPROVAL FROM ENGINEER FOR MAINTENANCE.
4. INSTALL TYPE II DELINEATOR AS SHOWN.
5. USE A SIGN AT EACH END OF CROSSING ADJACENT TO APPROACHING TRAFFIC WHERE THE MEDIAN IS SEPARATED BY MORE THAN 150 FEET.

REVISIONS

NO.	DATE	APPR.	REMARKS
1	08/14/03	J.	CORRECTED TOP DETAIL NAME TO FREEWAY CROSSOVER

UTAH DEPARTMENT OF TRANSPORTATION
STANDARD DRAWINGS FOR ROAD AND BRIDGE CONSTRUCTION
SALT LAKE CITY, UTAH

RECOMMENDED FOR APPROVAL — AUG.28,2003 DATE

CHAIRMAN STANDARDS COMMITTEE
APPROVED — AUG.28,2003 DATE

DEPUTY DIRECTOR

FREEWAY CROSSOVER MARKINGS

STANDARD DRAWING TITLE

STD DWG
ST 2

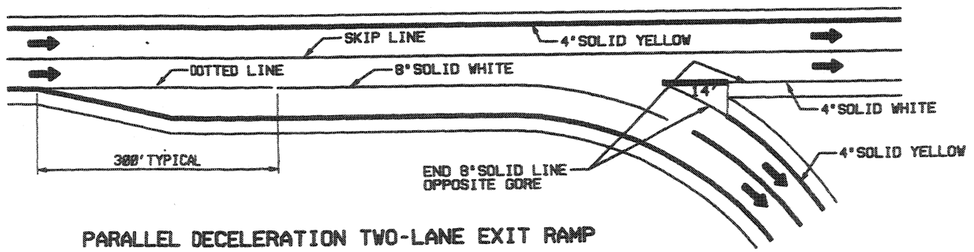

PARALLEL DECELERATION TWO-LANE EXIT RAMP

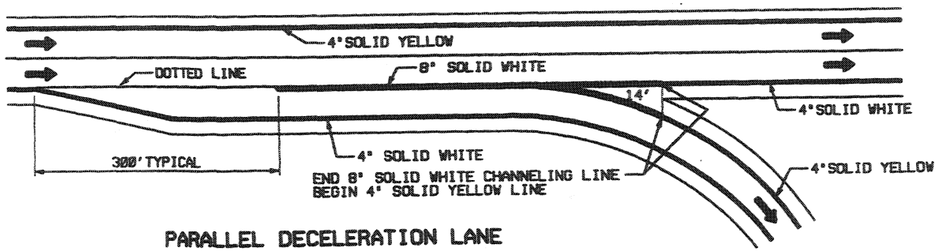

PARALLEL DECELERATION LANE

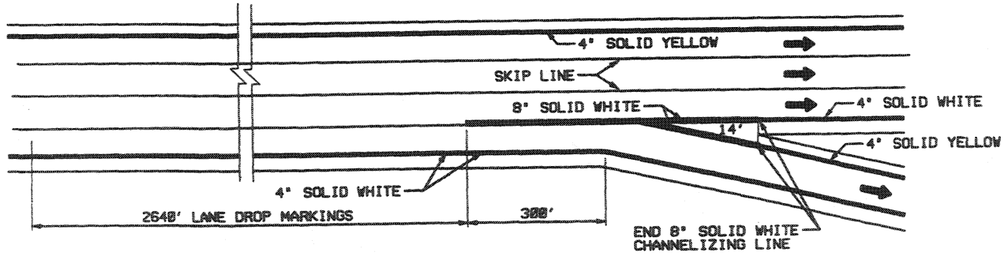

LANE DROP EXIT RAMP

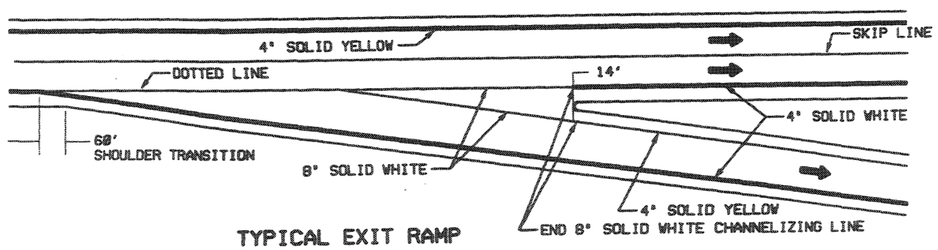

TYPICAL EXIT RAMP

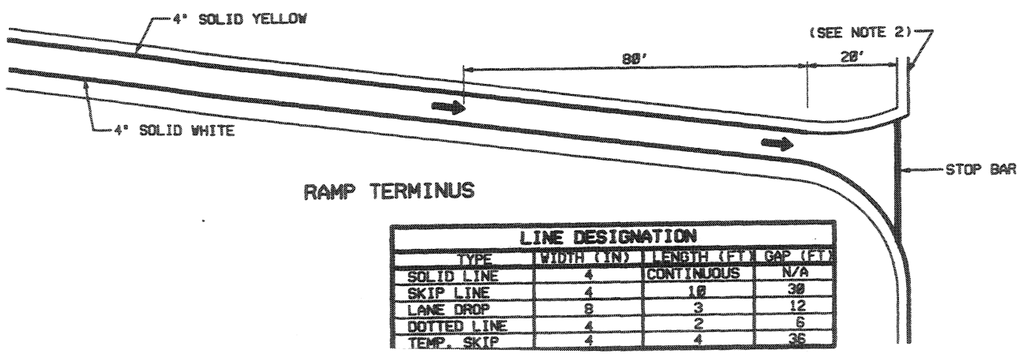

RAMP TERMINUS

LINE DESIGNATION			
TYPE	WIDTH (IN)	LENGTH (FT)	GAP (FT)
SOLID LINE	4	CONTINUOUS	N/A
SKIP LINE	4	10	30
LANE DROP	8	3	12
DOTTED LINE	4	2	6
TEMP. SKIP	4	4	36

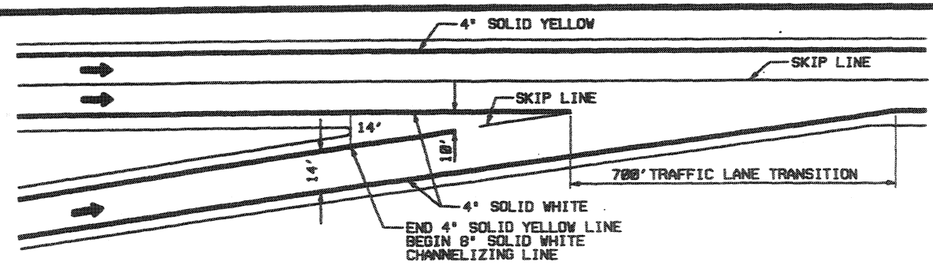

ENTRANCE RAMP

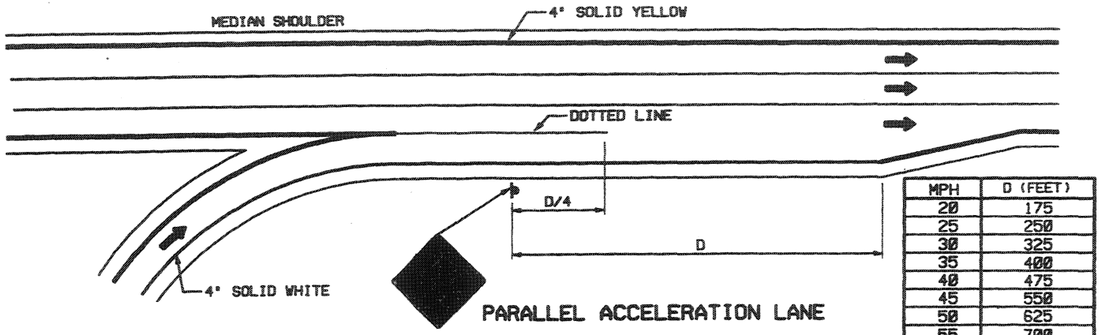

PARALLEL ACCELERATION LANE

MPH	D (FEET)
20	175
25	250
30	325
35	400
40	475
45	550
50	625
55	700
60	775
65	850
70	925
75	1000

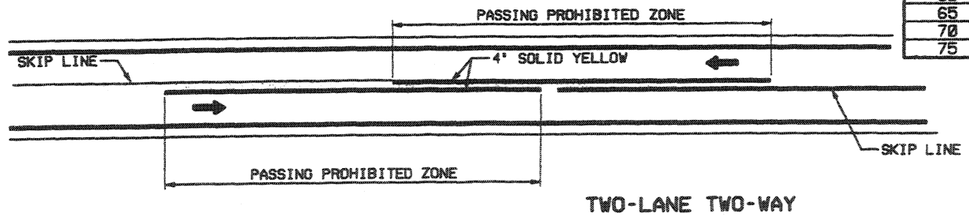

TWO-LANE TWO-WAY

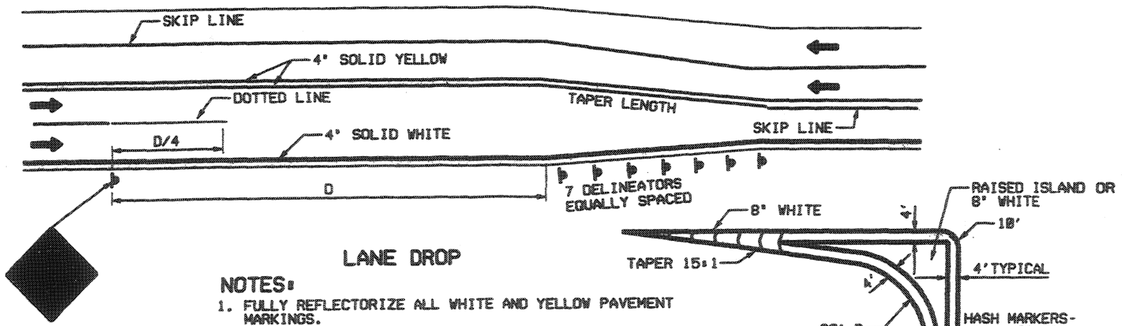

LANE DROP

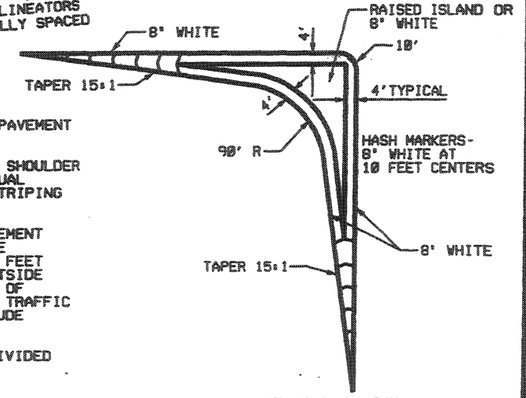

CHANNELIZING ISLAND

NOTES:

1. FULLY REFLECTORIZE ALL WHITE AND YELLOW PAVEMENT MARKINGS.
2. TIE RAMP SHOULDER STRIPING INTO EXISTING SHOULDER STRIPING ON THE CROSS STREET WITH A GRADUAL TRANSITION. DISCONTINUE RAMP SHOULDER STRIPING AT THE CROSS STREET EDGE OF PAVEMENT.
3. PAINT A SHOULDER LINE IN AREAS WHERE PAVEMENT EXTENDS TO CURB AND GUTTER, TO DEFINE THE TRAVEL PATH OF A TYPICAL LANE (11 OR 12 FEET WIDE) WHEN THE LATERAL DISTANCE FROM OUTSIDE SKIP LINE OR PERMISSIVE TURN LANE TO LIP OF GUTTER IS 16 FEET OR GREATER. THE REGION TRAFFIC ENGINEER CAN AUTHORIZE EXCEPTIONS TO EXLUDE SHOULDER LINES IN THESE AREAS.
4. PAINT THE LEFT EDGE OF EACH ROADWAY OF DIVIDED ROADS WITH A YELLOW SHOULDER LINE.
5. GET APPROVAL FOR CHANGES TO EXISTING OR INSTALLATION OF NEW PASS ZONES BY TRAFFIC AND SAFETY DIVISION.
6. CONTACT THE REGION TRAFFIC ENGINEER FOR STRIPING AND PAVEMENT MARKINGS ON MULTI-LANE RAMP TERMINI.

REVISIONS				
NO.	DATE	APPR.	REMARKS	

UTAH DEPARTMENT OF TRANSPORTATION
STANDARD DRAWINGS FOR ROAD AND BRIDGE CONSTRUCTION
SALT LAKE CITY, UTAH

RECOMMENDED FOR APPROVAL — JULY 03,2002 DATE

CHAIRMAN STANDARDS COMMITTEE
APPROVED — JULY 03,2002 DATE

DEPUTY DIRECTOR

STANDARD DRAWING TITLE

TYPICAL PAVEMENT MARKINGS

STD DWG
ST 3

NOTES:

1. THE REGION TRAFFIC ENGINEER DETERMINES THE NUMBER AND LOCATIONS OF CROSSWALKS AT AN INTERSECTION.
2. THE REGION TRAFFIC ENGINEER DETERMINES WHEN TO USE THE "SPECIAL EMPHASIS" CROSSWALK.
3. PLACE THE STOP LINE AT DESIRED STOPPING POINT.
4. USE A WIDER STOP LINE ONLY WHEN APPROVED BY THE REGION TRAFFIC ENGINEER.
5. ESTABLISH A "NO PARKING" ZONE 30 FEET PRIOR TO FLASHING SIGNAL, STOP SIGN, YELD SIGN, OR TRAFFIC CONTROL SIGNAL PLACED ON THE SIDE OF ROADWAY.
6. RED CURB MARKING IS OPTIONAL FOR "NO PARKING" ZONE.

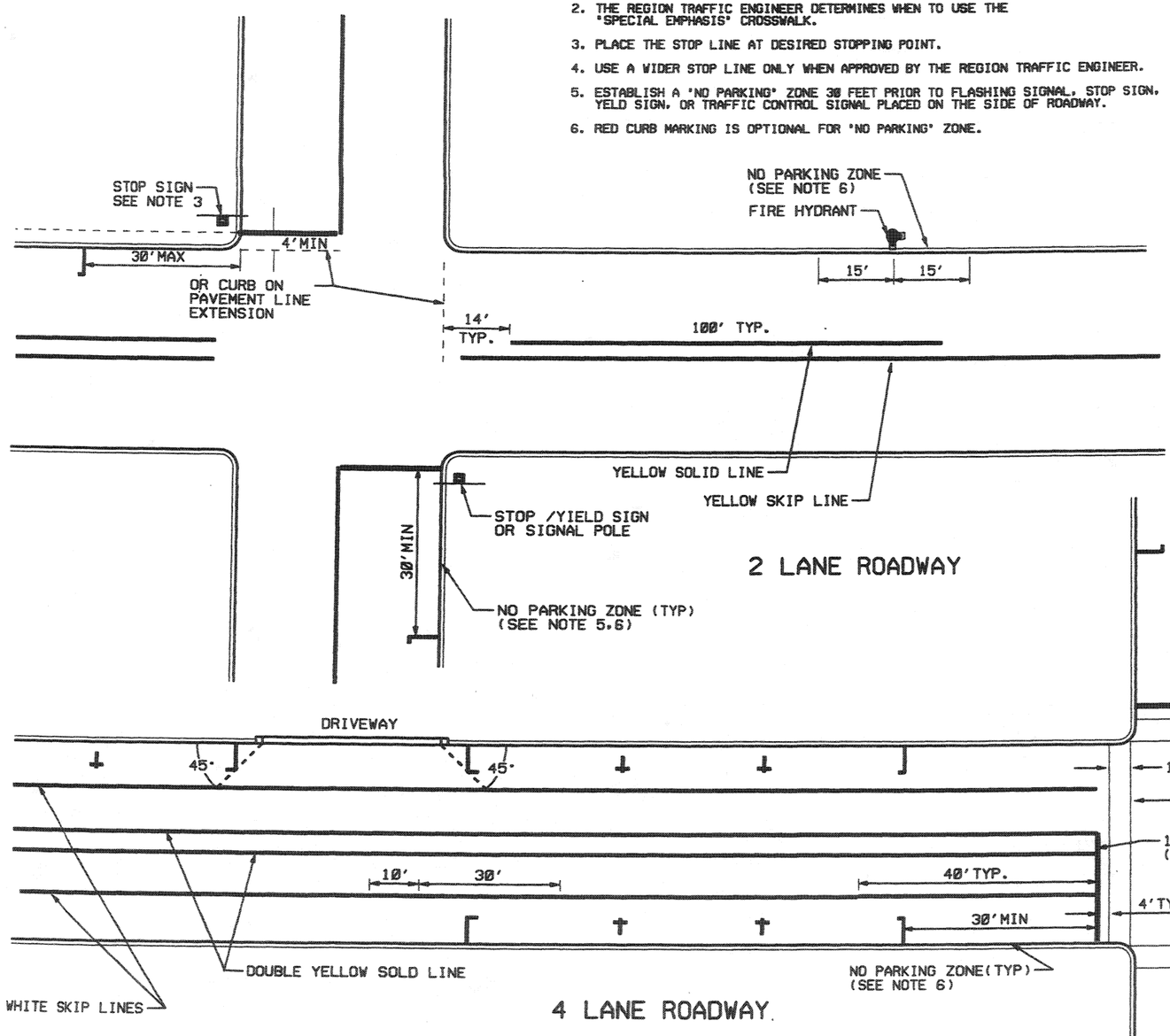

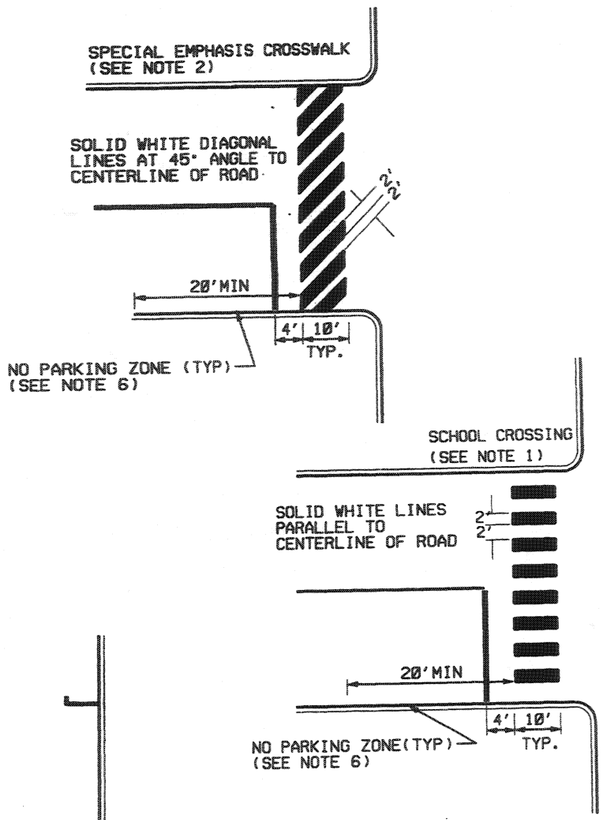

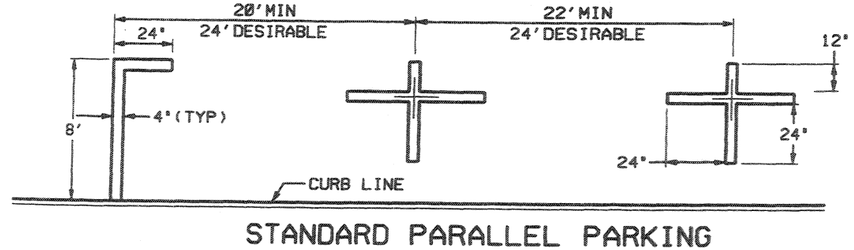

STANDARD PARALLEL PARKING

REVISIONS

NO.	DATE	APPR.	REMARKS

UTAH DEPARTMENT OF TRANSPORTATION
STANDARD DRAWINGS FOR ROAD AND BRIDGE CONSTRUCTION
SALT LAKE CITY, UTAH

RECOMMENDED FOR APPROVAL — JULY 03, 2002 DATE

CHAIRMAN STANDARDS COMMITTEE APPROVED — JULY 03, 2002 DATE

DEPUTY DIRECTOR

CROSSWALKS, PARKING AND INTERSECTION APPROACHES

STANDARD DRAWING TITLE

STD DWG
ST 4

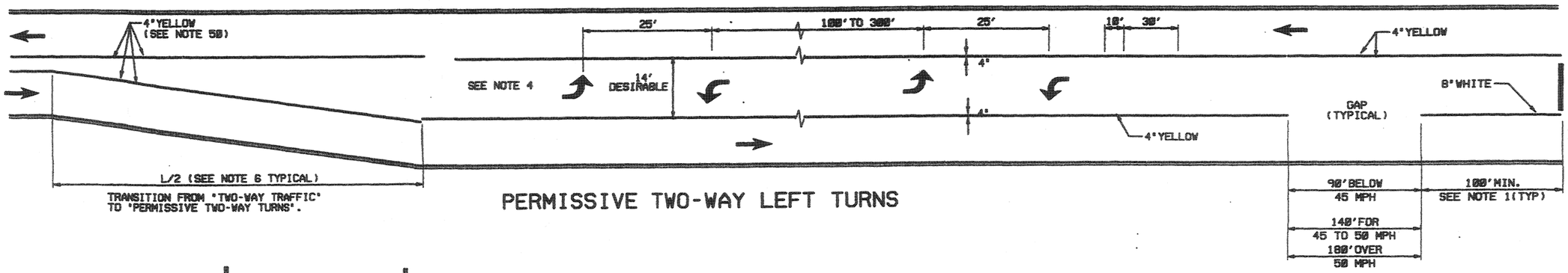

TRANSITION FROM 'TWO-WAY TRAFFIC' TO 'PERMISSIVE TWO-WAY TURNS'.

PERMISSIVE TWO-WAY LEFT TURNS

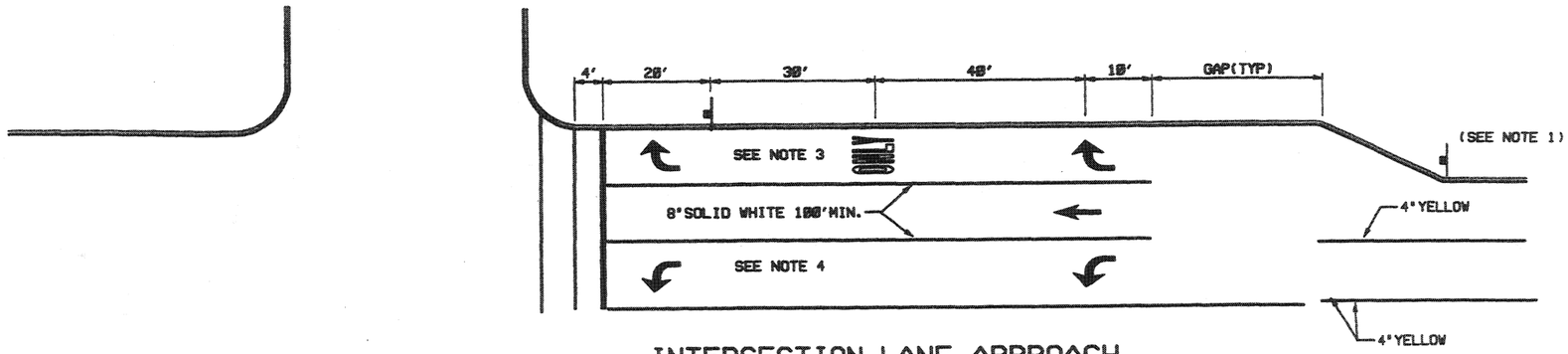

INTERSECTION LANE APPROACH

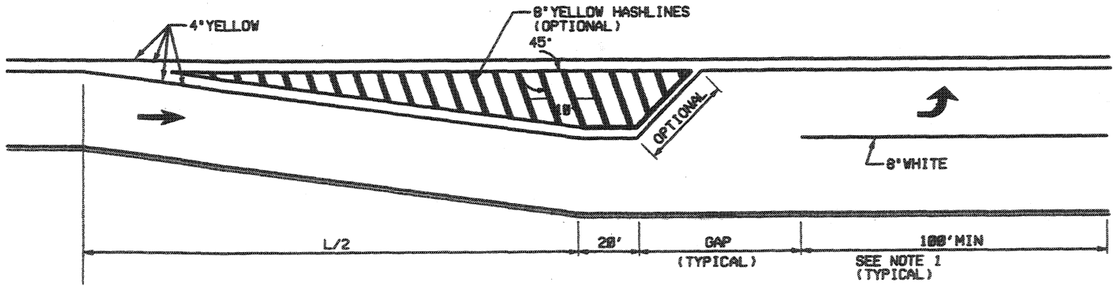

PAINTED LEFT TURN LANE

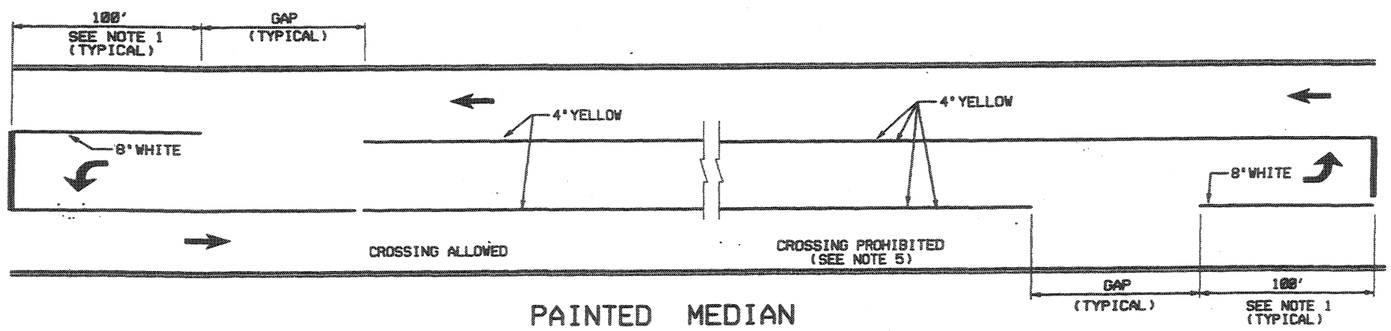

PAINTED MEDIAN

NOTES:

1. USE A CAPACITY ANALYSIS TO DETERMINE THE LENGTH OF STORAGE REQUIRED FOR TURN LANE. A MINIMUM LENGTH OF 100 FEET IS REQUIRED.
2. USE THE STANDARD ALPHABET FOR HIGHWAY SIGNS AND PAVEMENT MARKINGS FOR PAVEMENT MESSAGES.
3. USE PAVEMENT MARKINGS CONSISTING OF ARROWS, THE WORD "ONLY" IN LANE, AND THE STANDARD SIGN R3-7R WHEN THE LANE IS A MANDATORY MOVEMENT.
4. PAVEMENT MARKINGS ARE OPTIONAL FOR MANDATORY LEFT TURN LANES AND TWO-WAY LEFT TURN LANES.
5. CREATE A CROSSING PROHIBITED ISLAND OR MEDIAN BY PLACING TWO DOUBLE YELLOW LINES FOR EACH DIRECTION (4 SOLID YELLOW LINES TOTAL)
6. TAPER FORMULA: L = SW FOR SPEEDS OF 45 MPH OR GRATER
   L = $WS^2/60$ FOR SPEEDS OF 40 MPH OR LESS.
7. FOR RAISED MEDIAN AND PLOWABLE END SECTION DETAILS SEE STD DWG GW 1

REVISIONS

NO.	DATE	APPR.	REMARKS

UTAH DEPARTMENT OF TRANSPORTATION
STANDARD DRAWINGS FOR ROAD AND BRIDGE CONSTRUCTION
SALT LAKE CITY, UTAH

RECOMMENDED FOR APPROVAL — JULY 03, 2002 DATE

CHAIRMAN STANDARDS COMMITTEE APPROVED — JULY 03, 2002 DATE

DEPUTY DIRECTOR

PAINTED MEDIAN & AUXILIARY LANE DETAILS
STANDARD DRAWING TITLE

STD DWG
ST 5

TYPE I

TYPE II

BARRICADES
NOTES 1, 2

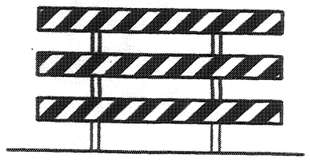

TYPE III
NOTE 2

ADVANCE WARNING ARROW PANELS
SEE NOTE 3

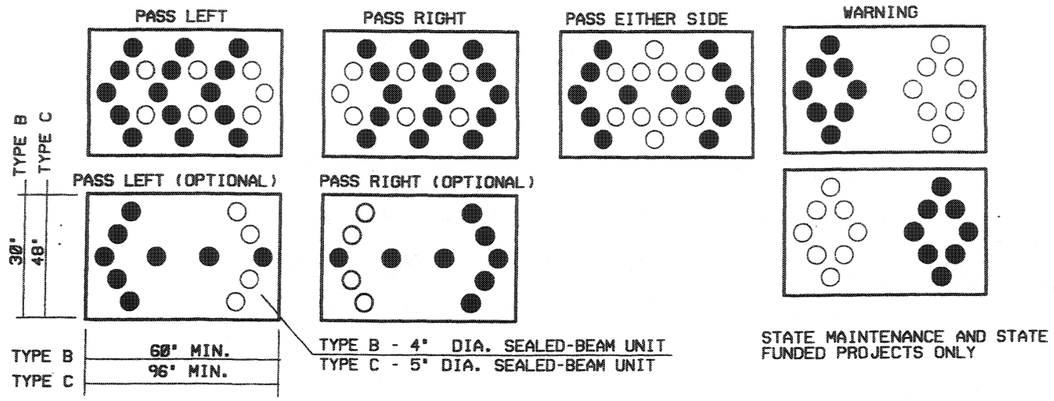

STATE MAINTENANCE AND STATE FUNDED PROJECTS ONLY

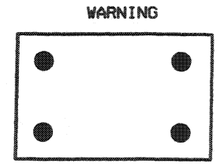

FEDERAL FUNDED PROJECTS ONLY.

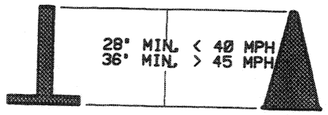

TUBULAR MARKERS
DAYLIGHT HOURS ONLY

CONES
DAYLIGHT HOURS ONLY

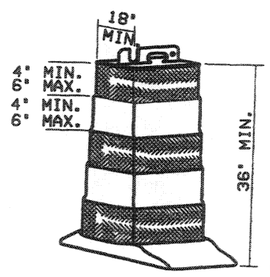

ONE-PIECE RECTANGULAR W/REFLECTIVE BANDS

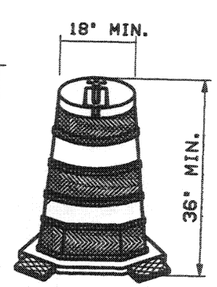

TWO-PIECE ROUND W/REFLECTIVE BANDS

PLASTIC DRUMS
SEE NOTE 4

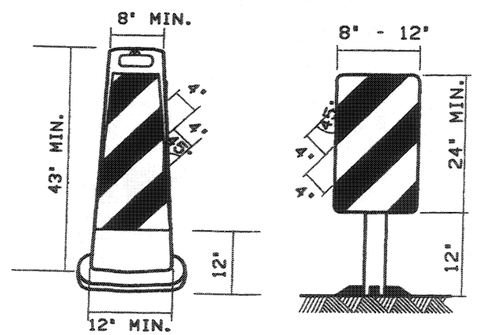

VERTICAL PANELS
SEE NOTE 1

NOTES:

1. A MINIMUM OF 270 SQUARE INCHES OF RETROREFLECTIVE MATERIAL PLACED A MINIMUM OF 12 INCHES ABOVE THE ROADWAY SURFACE IS REQUIRED ON BARRICADES AND VERTICAL PANELS WHEN USED ON THE INTERSTATE OR ROADWAYS WITH A POSTED SPEED OF GREATER THAN 45 MPH. PLACE BARRICADES AND VERTICAL PANELS IN SUCH A MANNER THAT THEY ARE VISIBLE TO APPROACHING TRAFFIC.
2. USE SANDBAGS WITH SAND OR OTHER COMPARABLE SOFT MATERIAL AS BALLAST. DO NOT PLACE BALLAST HIGHER THAN 12 INCHES ABOVE THE ROADWAY AND DO NOT COVER ANY REFLECTIVE AREA OF RAILS OR SIGNS.
3. PLACE THE BOTTOM EDGE OF THE ADVANCE WARNING ARROW PANELS A MINIMUM OF 7 FEET ABOVE THE ROADWAY SURFACE.
4. USE PLASTIC DRUMS AS LANE CLOSURE TAPER DEVICES FOR SPEEDS 50 MPH AND GREATER.

REVISIONS

NO.	DATE	APPR.	REMARKS

UTAH DEPARTMENT OF TRANSPORTATION
STANDARD DRAWINGS FOR ROAD AND BRIDGE CONSTRUCTION
SALT LAKE CITY, UTAH

RECOMMENDED FOR APPROVAL — JULY 03,2002 DATE

CHAIRMAN STANDARDS COMMITTEE
APPROVED — JULY 03,2002 DATE

DEPUTY DIRECTOR

CONSTRUCTION ZONE CHANNELIZATION DEVICES
STANDARD DRAWING TITLE

STD DWG
TC 1A

NOTES 1, 5

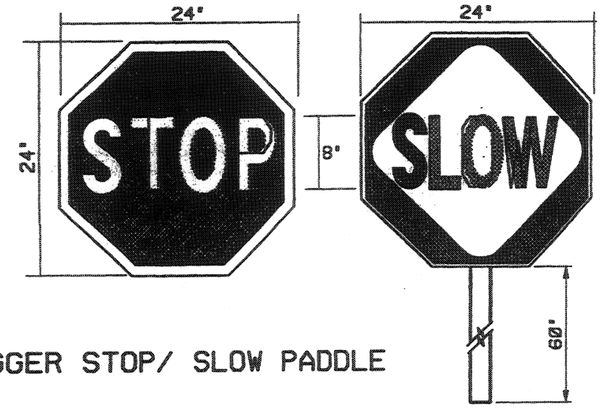

FLAGGER STOP/ SLOW PADDLE

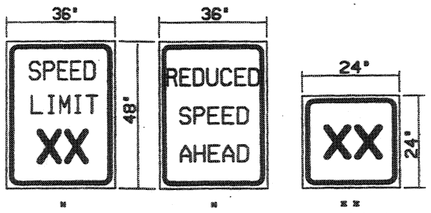

REDUCED SPEED SIGNING

* REGULATORY - BLACK/WHITE

** ADVISORY - BLACK/ORANGE

XX SPEED

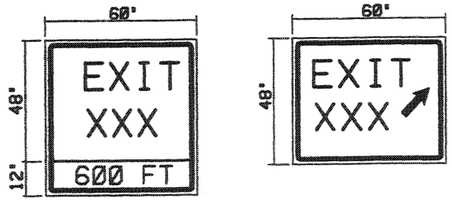

EXIT RAMP SIGNING

BLACK/ORANGE

XXX EXIT NUMBER

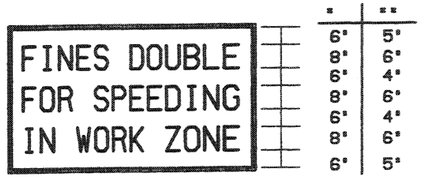

*	**
6"	5"
8"	6"
6"	4"
8"	6"
6"	4"
8"	6"
6"	5"

FINES DOUBLE SIGN
- LONG TERM APPLICATION

* 84" X 48" FREEWAY

** 60" X 36" CONVENTIONAL HIGHWAYS

USE SERIES 'C' STANDARD HIGHWAYS ALPHABET

BLACK/ORANGE

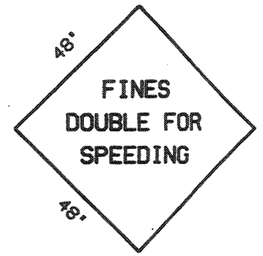

FINES DOUBLE SIGN
- SHORT TERM APPLICATION

USE 7" SERIES 'C' STANDARD HIGHWAY ALPHABET

USE ON RAMPS AND SIDE STREET APPROACHES

BLACK/ORANGE

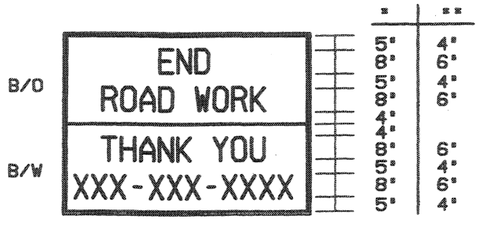

*	**
5"	4"
8"	6"
5"	4"
8"	6"
4"	
4"	
8"	6"
5"	4"
8"	6"
5"	4"

CONSTRUCTION ZONE
INFORMATION SIGN

* 84" X 60" FREEWAY

** 60" X 48" CONVENTIONAL HIGHWAYS

USE SERIES 'C' STANDARD HIGHWAYS ALPHABET

XXX CONTRACTOR'S PHONE NUMBER

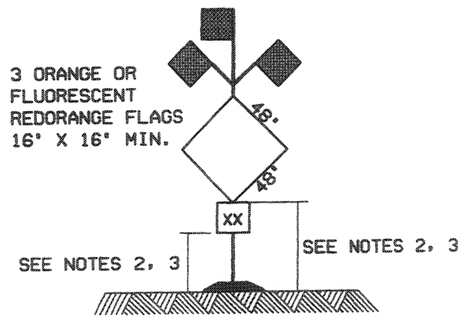

TYP. SIGN INSTALLATION
WITH FLAGS

SEE NOTES 4, 5

NOTES

1. CLOSE ROADWAYS WITH TYPE III BARRICADES. EXTEND THE BARRICADES ACROSS INTENDED ROAD CLOSURE A MINIMUM OF * OF THE ROADWAY STARTING FROM THE CENTER OF THE ROADWAY AND EXTENDING IN BOTH DIRECTIONS TOWARD THE SHOULDERS. PLACE A 'ROAD CLOSED' SIGN (R11-2) OVER THE CENTER LINE AND THE APPROPRIATE 'DETOUR' ARROW SIGNS (M4-10 L OR R) ON EACH SIDE OF THE 'ROAD CLOSED' SIGN. DETOUR ARROWS ARE NOT REQUIRED IF DETOUR IS NOT AT ROAD CLOSURE.
2. SIGNS ON PORTABLE STANDS REQUIRE A 12 INCH MINIMUM MOUNTING HEIGHT.
3. SIGNS ON PORTABLE STANDS PLACED AMONG CHANNELIZING DEVICES REQUIRE A 36 INCH MINIMUM MOUNTING HEIGHT.
4. SIGNS USING POST TYPES P1,P2 OR P3 REQUIRE A MINIMUM 84 INCHES MOUNTING HEIGHT FROM ROADWAY SURFACE. REFER TO SN SERIES STANDARD DRAWINGS.
5. PLACE TWO ORANGE STRIPS OF REFLECTIVE SHEETING, 4 INCHES X 24 INCHES, VERTICALLY, 12 INCHES FROM THE RIGHT AND LEFT CORNERS ON THE BACK OF SIGNS USED WITH PORTABLE STANDS. USE THE SAME GRADE OF REFLECTIVE SHEETING AS USED ON THE FRONT OF THE SIGN.
6. USE SANDBAGS WITH SAND OR OTHER COMPARABLE SOFT MATERIAL AS BALLAST. DO NOT PLACE BALLAST HIGHER THAN 12 INCHES ABOVE THE ROADWAY AND DO NOT COVER ANY REFLECTIVE AREA OF RAILS OR SIGNS.
7. PLACE ADVISORY SPEED LIMIT SIGNS ONLY IN COMBINATION WITH AND BELOW A WARNING SIGN.

REVISIONS

NO.	DATE	APPR.	REMARKS

UTAH DEPARTMENT OF TRANSPORTATION

STANDARD DRAWINGS FOR ROAD AND BRIDGE CONSTRUCTION
SALT LAKE CITY, UTAH

RECOMMENDED FOR APPROVAL — JULY 03,2002 DATE

CHAIRMAN STANDARDS COMMITTEE APPROVED — JULY 03,2002 DATE

DEPUTY DIRECTOR

CONSTRUCTION ZONE SIGNING

STANDARD DRAWING TITLE

STD DWG
TC 1B

HAZARD MITIGATION

1. USE CONSTRUCTION CLEAR ZONE DISTANCE IDENTIFIED IN TABLE 1 TO MITIGATE THE FOLLOWING HAZARDS.
   HAZARDS
   A. NON-WORKING EQUIPMENT OR VEHICLES
   B. STOCKPILED MATERIAL
   C. WORKING VEHICLES AND WORKERS (NON-FLAGGERS)
   D. OTHER OBJECTS AND FEATURES (IE: BRIDGE PARAPETS, BARRIER BLUNT ENDS, POLES)
   E. VERTICAL DROP-OFF LESS THAN 48 INCHES OR SLOPES STEEPER THAN 4:1
2. MITIGATE ALL OTHER HAZARDS OR DROP-OFFS GREATER THAN 48 INCHES WITHIN AASHTO CLEAR ZONE AS APPROVED BY THE REGION TRAFFIC ENGINEER.

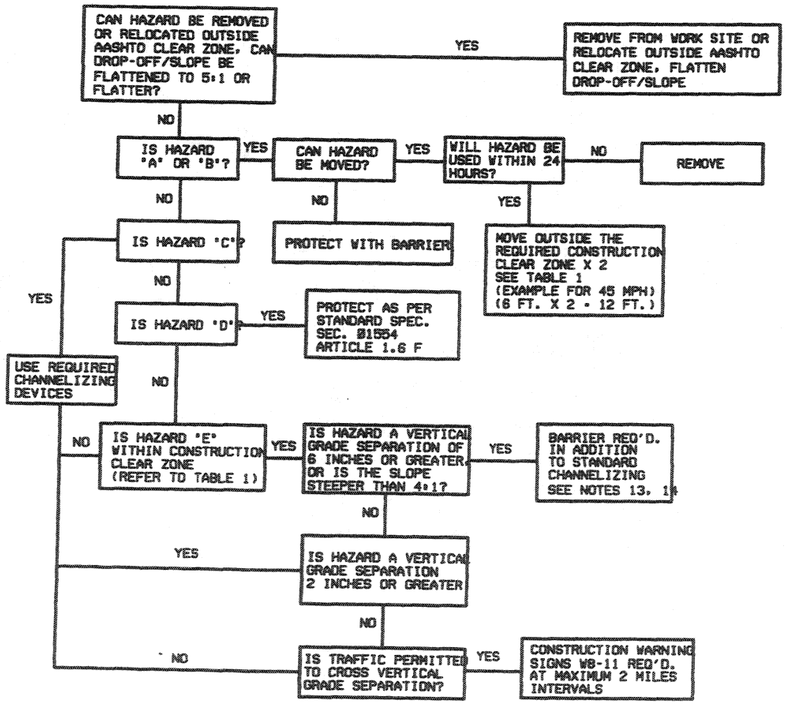

DETAIL AA

NOTES:

1. USE CURRENT EDITION OF UDOT STANDARDS AND MUTCD FOR TRAFFIC CONTROL.
2. SEE STD DWG TC 1A AND TC 1B FOR CONSTRUCTION ZONE SIGNING AND DEVICE REQUIREMENT.
3. COVER OR REMOVE NON-APPLICABLE SIGNING, BOTH EXISTING AND CONSTRUCTION SIGNS. REMOVE NON-APPLICABLE PAVEMENT MARKINGS.
4. REMOVE NON-APPLICABLE PORTABLE SIGNS OR MOVE BEYOND A DISTANCE TWICE THAT OF THE CONSTRUCTION CLEAR ZONE. (SEE TABLE 1 AND DETAIL AA).
5. REFER TO STANDARD SPECIFICATION 01554, ARTICLE 3.5A, FOR FLAGGING REQUIREMENT FOR OPERATING TRAFFIC SIGNALS.
6. USE A FULL LANE CLOSURE WHEN WORK ENCROACHES INTO A TRAFFIC LANE, UNLESS THE TRAFFIC LANE CAN BE RECREATED.
7. CLEAN AND RESTORE PAVEMENT MARKINGS AT THE END OF EACH DAY'S OPERATION, BOTH ON AND OFF THE PROJECT, THAT ARE OBSCURED BY WORK OPERATIONS.
8. LIMIT ADVISORY AND REGULATORY SPEED REDUCTION OF 10 MPH, WITH THE APPROVAL FROM THE ENGINEER. FOR REDUCTIONS EXCEEDING 10 MPH, OBTAIN APPROVAL FROM THE REGION TRAFFIC ENGINEER. USE SPEED REDUCTIONS ONLY DURING IMPACTED TIMES AND AREAS. RESTORE REGULATORY SPEED LIMIT AT LOCATIONS WHERE TRAFFIC IS NOT BEING IMPACTED BY CONSTRUCTION ACTIVITIES.
9. USE THE POSTED SPEED LIMIT PRIOR TO CONSTRUCTION TO COMPUTE THE SIGN SPACING, TAPER LENGTH, BUFFER ZONE, AND CONSTRUCTION CLEAR ZONE DISTANCE. USE THE POSTED SPEED LIMIT DURING CONSTRUCTION TO DETERMINE THE TANGENT SPACING FOR CHANNELIZING DEVICES.
10. USE PLASTIC DRUMS FOR LANE CLOSURE TAPER DEVICES FOR SPEEDS 50 MPH AND GREATER.
11. USE DOWNSTREAM TAPER FOR OPERATIONS LONGER THAN 3 DAYS.
12. PLACE ADVANCE WARNING ARROW PANEL IN THE FIRST 1/3 OF THE TAPER.
13. USE AN APPROVED CONSTRUCTION ZONE ATTENUATOR WITH TEMPORARY PRECAST CONCRETE BARRIER WHEN APPROACH ENDS ARE WITHIN AASHTO CLEAR ZONE. DO NOT USE A TRUCK MOUNTED ATTENUATOR FOR ANY PERIOD LONGER THAN 24 HOURS.
14. USE PROPER LENGTH OF NEED FOR TEMPORARY BARRIER AS PER THE REQUIREMENTS OF THE CURRENT EDITION OF THE ROADSIDE DESIGN GUIDE. USE POSTED SPEED LIMIT PRIOR TO THE CONSTRUCTION ZONE FOR THE DESIGN OF THE REQUIRED LENGTH OF NEED. USE TABLE 2 FOR THE CONSTRUCTION ZONE FLARE RATE REQUIREMENT FOR TEMPORARY BARRIER. APPROVAL FROM THE REGION TRAFFIC ENGINEER IS REQUIRED FOR MODIFICATION TO THE REQUIRED FLARE RATE.

TABLE 1
CONSTRUCTION CLEAR ZONE

MPH	FEET
40 & LESS	3
45	6
50	6.5
55	7.5
60	8
65	8.5
70	9
75	10.5

TABLE 2
CONSTRUCTION ZONE FLARE RATES TEMPORARY BARRIER

MPH	FLARE
≥70	20:1
65	18:1
60	17:1
55	16:1
50	14:1
45	10:1
≤40	6:1

REVISIONS

NO.	DATE	APPR.	REMARKS

UTAH DEPARTMENT OF TRANSPORTATION
STANDARD DRAWINGS FOR ROAD AND BRIDGE CONSTRUCTION
SALT LAKE CITY, UTAH

RECOMMENDED FOR APPROVAL — JULY 03, 2002 DATE

CHAIRMAN STANDARDS COMMITTEE APPROVED — JULY 03, 2002 DATE

DEPUTY DIRECTOR

TRAFFIC CONTROL GENERAL

STANDARD DRAWING TITLE

STD DWG
TC 2A

TAPER, BUFFER ZONE & SIGN SPACING CHART

	POSTED SPEED MPH(S)	MINIMUM TAPER LENGTH(L) 12' LANE CLOSURE	LENGTH OF BUFFER(BZ) DESIRABLE	MINIMUM SIGN SPACING(SS) A	B	C	ONE LANE TWO-WAY FLAGGING TAPER LENGTH
		FEET	FEET	FEET	FEET	FEET	FEET
NON INTER STATE	30 AND LOWER	180	180	100	100	100	50
	35	245	120	350	350	350	
	40	320	165				
	45	540	220	500	500	500	100
	50	600	280				
	55	660	335				
	60	720	415				
	65	780	485				
INTER STATE	65	780	485	1000	1500	2640	
	70	840	600				
	75	900	700				

1- TAPER FORMULAS

A) LANE TAPER LENGTH IN FEET

L= SW $\geq$ 45 MPH L= $\frac{WS^2}{60}$ $\leq$ 40 MPH

1/3 L = FOR SHOULDER CLOSURE TAPER

= L = FOR LANE SHIFT TAPER

WHERE L = TAPER LENGTH
W = WIDTH OF CLOSURE OR SHIFT
S = POSTED SPEED

2- CHANNELIZING DEVICES

A) USE A MINIMUM OF 1 DEVICE PER FOOT OF LANE CLOSURE, PLUS 1 ADDITIONAL DEVICE TO START.

B) ON TANGENT: S X 2 = SPACING UP TO 100 FEET MAXIMUM.

C) LENGTH OF BUFFER ZONE (BZ) IS THE DISTANCE FROM END OF LANE CLOSURE TAPER TO WORK AREA, OR ANY OBSTRUCTION PRIOR TO WORK AREA.

TRAFFIC CONTROL DEVICE LEGEND

- SIGN (PORTABLE OR FIXED)
- CHANNELIZING DEVICE (SEE STD DWG TC 1)
- PLASTIC DRUMS
- FLAGGING STATION
- ADVANCE WARNING ARROW PANEL
- BARRIER
- DIRECTION OF TRAFFIC
- TYPE III BARRICADE
- DIRECTION OF WORK VEHICLE

REDUCED SPEED WORK ZONE SIGNING

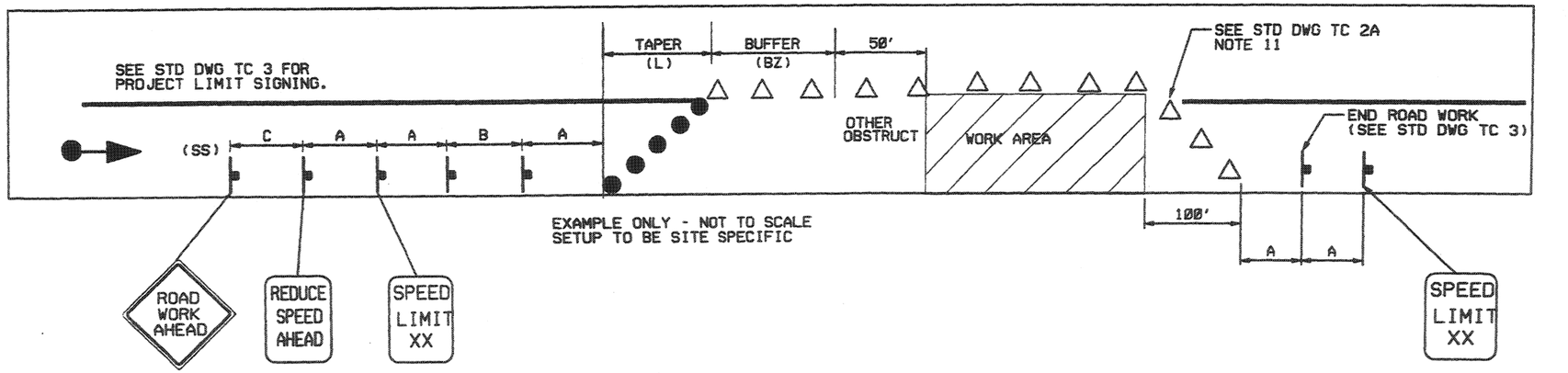

STANDARD WORK ZONE SIGNING

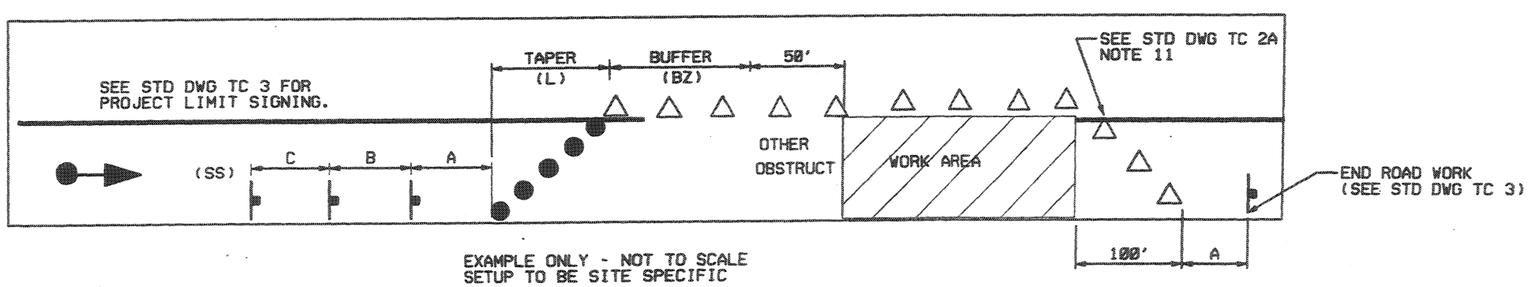

REVISIONS

NO.	DATE	APPR.	REMARKS

UTAH DEPARTMENT OF TRANSPORTATION
STANDARD DRAWINGS FOR ROAD AND BRIDGE CONSTRUCTION
SALT LAKE CITY, UTAH

RECOMMENDED FOR APPROVAL — JULY 03,2002 DATE

CHAIRMAN STANDARDS COMMITTEE APPROVED — JULY 03,2002 DATE

DEPUTY DIRECTOR

STANDARD DRAWING TITLE: TRAFFIC CONTROL GENERAL

STD DWG TC 2B

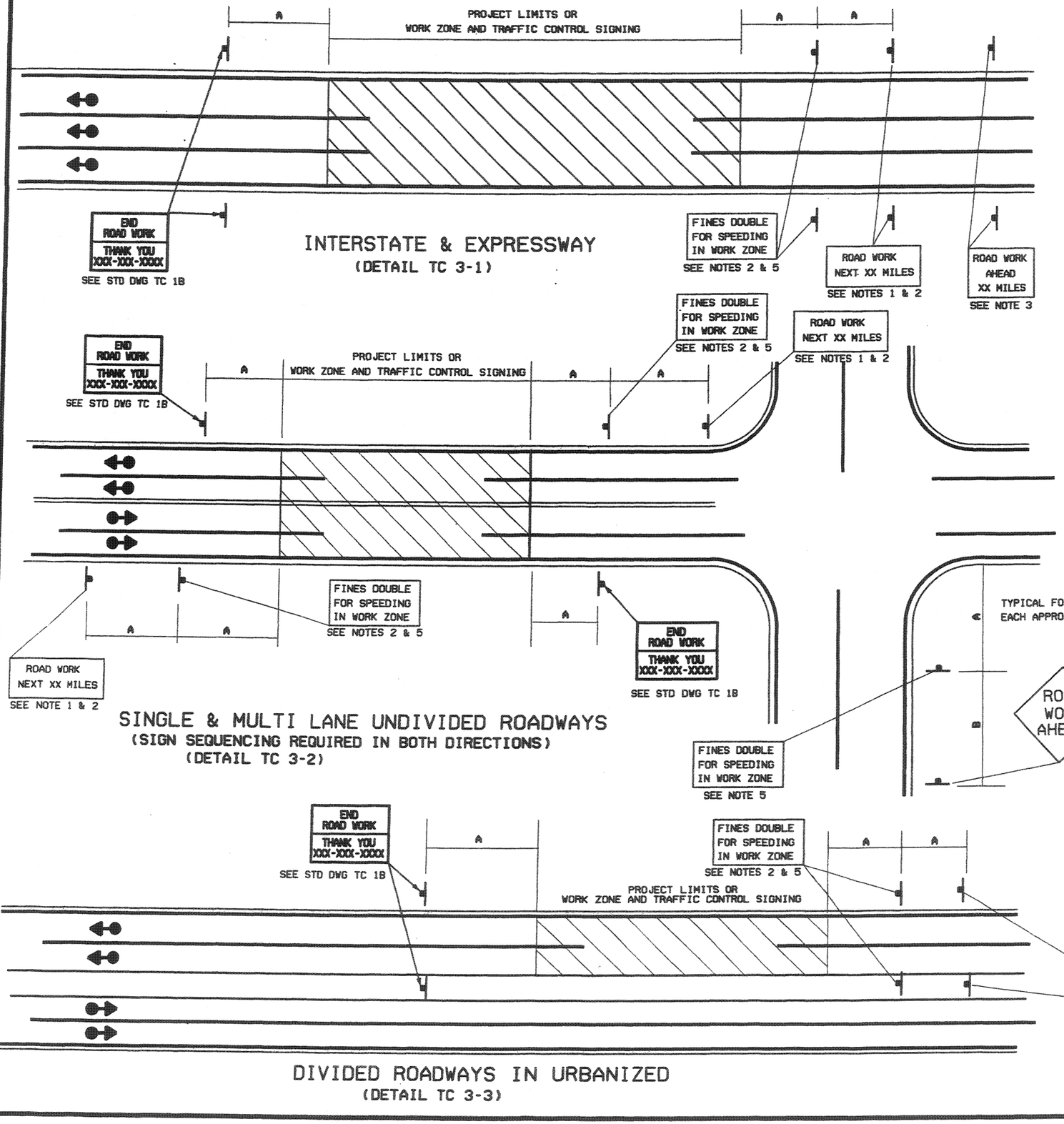

NOTES:

1. USE 'ROAD WORK NEXT __ MILES' SIGN G20-1, WHEN TRAFFIC CONTROL IS GREATER THAN 2 MILES IN LENGTH.
2. PLACE ' ROAD WORK AHEAD' SIGN AHEAD OF THE 'FINES DOUBLE FOR SPEEDING IN WORK ZONE' SIGN WHEN THE 'ROAD WORK NEXT __ MILES' IS NOT USED.
3. PLACE 'ROAD WORK AHEAD __ MILES' SIGN AT ROUTE SEPARATION POINT IF AN ALTERNATE ROUTE IS AVAILABLE AND SIGNIFICANT DELAYS ARE EXPECTED.
4. USE PROJECT LIMIT SIGNING IN BOTH DIRECTIONS IF TRAFFIC CONTROL AFFECTS TRAFFIC IN BOTH DIRECTIONS.
5. 'FINES DOUBLE FOR SPEEDING IN WORK ZONE' SIGN IS OPTIONAL. SEE STD DWG TC 1B.
6. WHEN REDUCED SPEEDS AND/OR 'FINES DOUBLE' OPTION IS USED, 'FINES DOUBLE' SIGNING AND SPEED LIMIT SIGNING ARE REQUIRED AT ALL INTERCHANGES WITHIN THE PROJECT.
7. PLACE SIGNING ON RIGHT SHOULDER AND MEDIAN WHEN CONDITIONS PERMIT.
8. SEE STD DWG TC 2B FOR TAPER, BUFFER ZONE, AND SIGN SPACING CHART.

REVISIONS

NO.	DATE	APPR.	REMARKS

UTAH DEPARTMENT OF TRANSPORTATION
STANDARD DRAWINGS FOR ROAD AND BRIDGE CONSTRUCTION
SALT LAKE CITY, UTAH

RECOMMENDED FOR APPROVAL — JULY 03,2002 DATE

CHAIRMAN, STANDARDS COMMITTEE APPROVED — JULY 03,2002 DATE

DEPUTY DIRECTOR

TRAFFIC CONTROL PROJECT LIMIT SIGNING

STANDARD DRAWING TITLE

STD DWG
TC 3

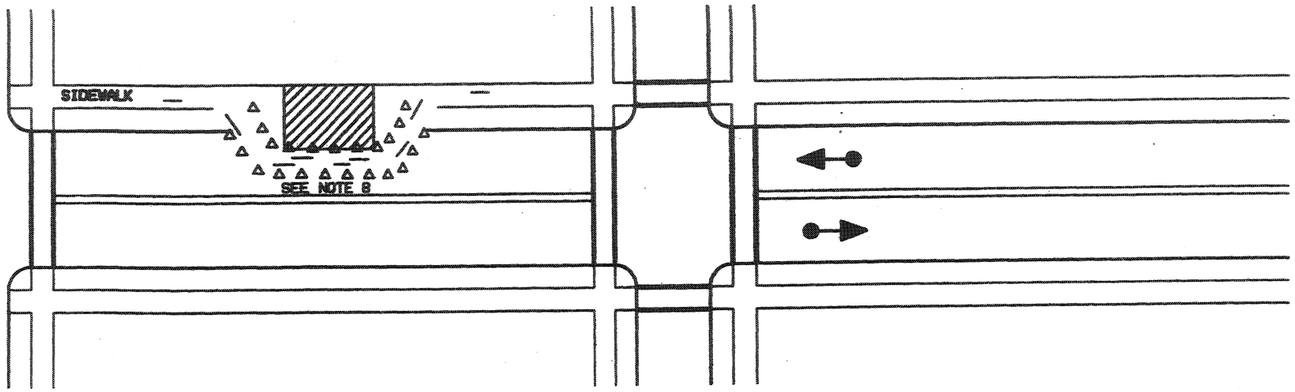

TEMPORARY WALKWAY
(DETAIL TC 6-1)
SEE NOTE 1

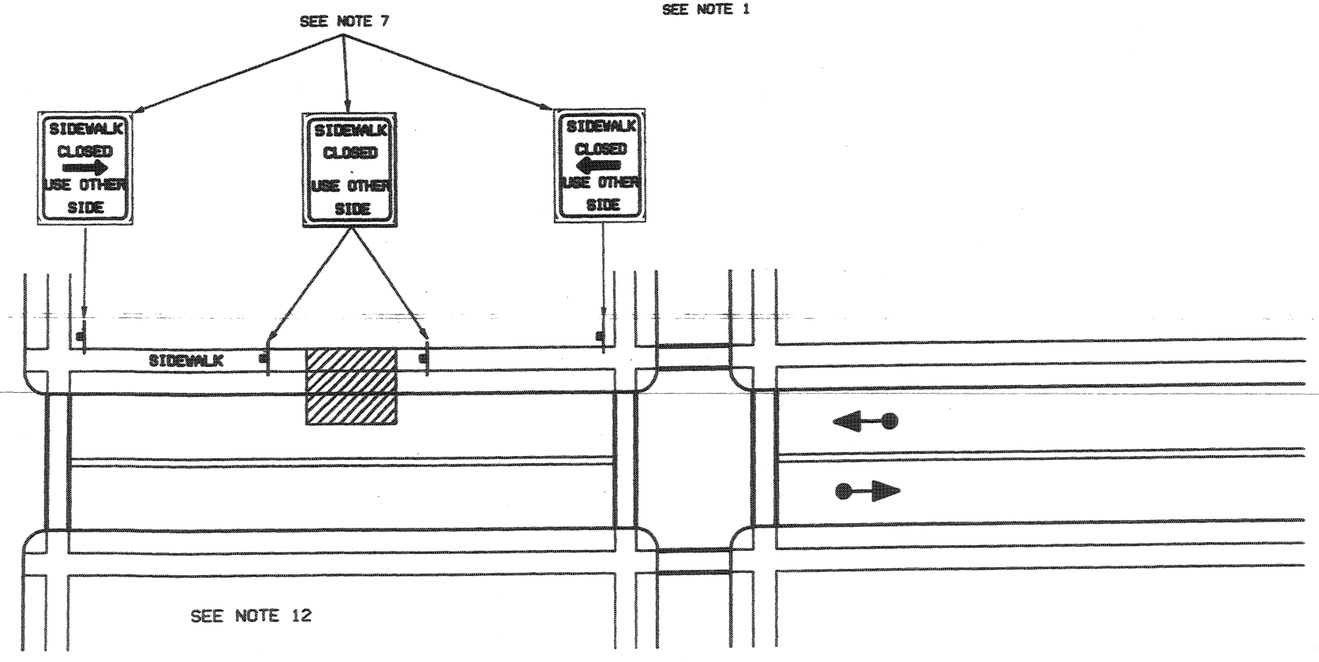

ALTERNATE ROUTE
(DETAIL TC 6-2)
SEE NOTE 1

NOTES:

1. ONLY THE TRAFFIC CONTROL DEVICES CONTROLLING PEDESTRIAN FLOWS ARE SHOWN. OTHER DEVICES ARE NEEDED TO CONTROL TRAFFIC ON THE STREET. USE LANE CLOSURE SIGNING OR ROAD NARROWS SIGNS, AS NEEDED.
2. PROVIDE A TEMPORARY WALKWAY AROUND CONSTRUCTION AREA IF WALKWAY IS CLOSED TO PEDESTRIANS. IF WALKWAY CANNOT BE PROVIDED DIRECT PEDESTRIANS TO ALTERNATE ROUTES. (SEE DETAIL TC 6-1)
3. CONSTRUCT WALKWAY A MINIMUM OF 48" WIDE AND COVER WHEN POTENTIAL OF FALLING MATERIAL EXIST.
4. CONSTRUCT WALKWAY WITH A WOOD FLOOR OR PAVED SURFACE SO THAT IT IS TRAVERSABLE BY A WHEELCHAIR.
5. WHEN SIDEWALKS EXIST ON BOTH SIDES OF STREET COMPLETE WORK ON ONE SIDE AND REOPEN PRIOR TO STARTING WORK ON THE OTHER SIDE.
6. MOUNT SIGNS 6' MINIMUM HEIGHT.
7. USE A SIGN 24" X 36" MINIMUM. SIGN LEGEND TO BE 4" MINIMUM. SERIES "C" WITH AN ARROW 4" X 12".
8. USE CHANNELIZING DEVICES SPACED 10' ON CENTER AND CONNECTED TO EACH OTHER WITH AN ORANGE, RED, OR YELLOW POLYVINYL RIBBON OR STREAMER 4" OR GREATER IN WIDTH.
9. USE A 20' CORNER RADIUS TO DEVELOP A TEMPORARY WALKWAY AROUND A CORNER.
10. DIRECT PEDESTRIANS TO AN INTERSECTION OR MARKED CROSSWALK AS AN ALTERNATE ROUTE WHEN POSSIBLE.
11. CONSULT REGION TRAFFIC ENGINEER WHEN SCHOOL ROUTING PLANS ARE AFFECTED.
12. DO NOT DIRECT PEDESTRIANS TO OPPOSITE SIDE IF SIDEWALK DOES NOT EXIST.

REVISIONS

NO.	DATE	APPR.	REMARKS

UTAH DEPARTMENT OF TRANSPORTATION
STANDARD DRAWINGS FOR ROAD AND BRIDGE CONSTRUCTION
SALT LAKE CITY, UTAH

RECOMMENDED FOR APPROVAL — JULY 03,2002 DATE

CHAIRMAN STANDARDS COMMITTEE
APPROVED — JULY 03,2002 DATE

DEPUTY DIRECTOR

TRAFFIC CONTROL
PEDESTRIAN ROUTING

STANDARD DRAWING TITLE

STD DWG
TC 6

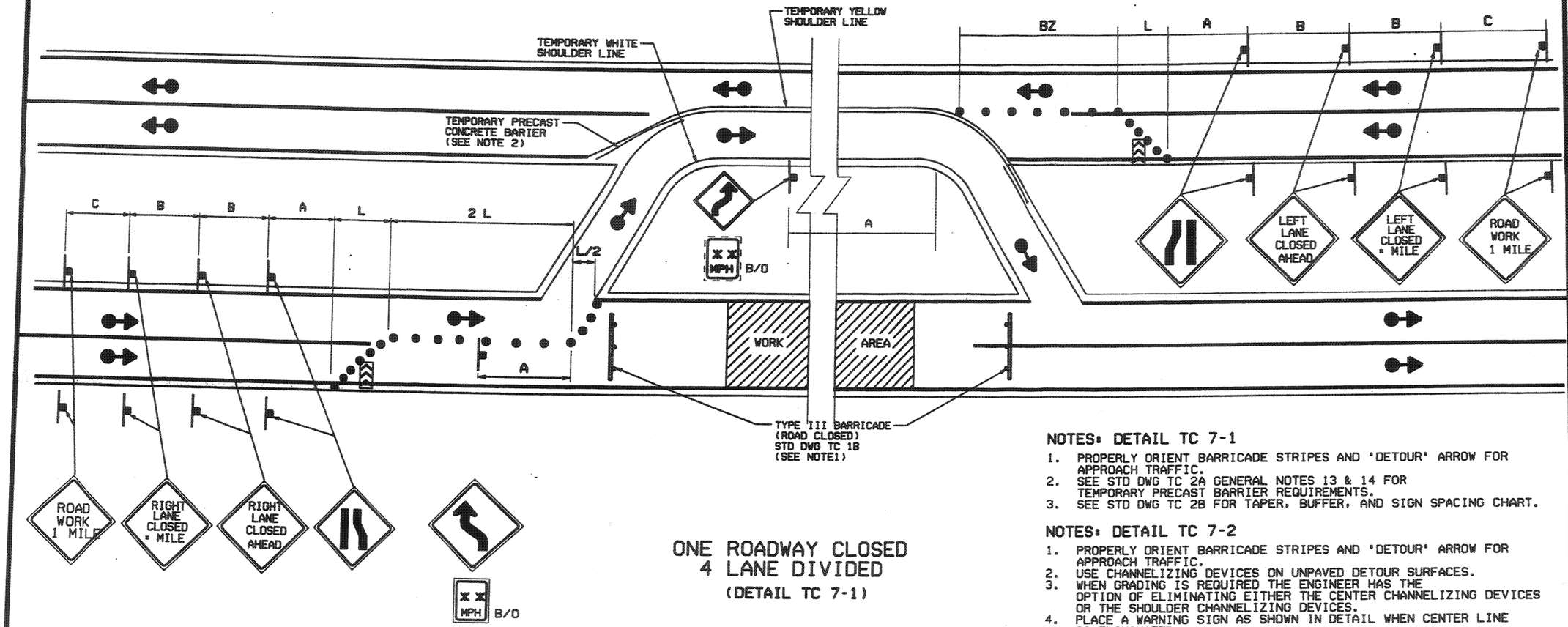

ONE ROADWAY CLOSED 4 LANE DIVIDED
(DETAIL TC 7-1)

ROADWAY CLOSED (DETOUR) 2 LANE, 2 WAY TRAFFIC
(DETAIL TC 7-2)

NOTES: DETAIL TC 7-1

1. PROPERLY ORIENT BARRICADE STRIPES AND 'DETOUR' ARROW FOR APPROACH TRAFFIC.
2. SEE STD DWG TC 2A GENERAL NOTES 13 & 14 FOR TEMPORARY PRECAST BARRIER REQUIREMENTS.
3. SEE STD DWG TC 2B FOR TAPER, BUFFER, AND SIGN SPACING CHART.

NOTES: DETAIL TC 7-2

1. PROPERLY ORIENT BARRICADE STRIPES AND 'DETOUR' ARROW FOR APPROACH TRAFFIC.
2. USE CHANNELIZING DEVICES ON UNPAVED DETOUR SURFACES.
3. WHEN GRADING IS REQUIRED THE ENGINEER HAS THE OPTION OF ELIMINATING EITHER THE CENTER CHANNELIZING DEVICES OR THE SHOULDER CHANNELIZING DEVICES.
4. PLACE A WARNING SIGN AS SHOWN IN DETAIL WHEN CENTER LINE IS ELIMINATED.
5. SEE STD DWG TC 2B FOR TAPER, BUFFER, AND SIGN SPACING CHART.

REVISIONS

NO.	DATE	APPR.	REMARKS

UTAH DEPARTMENT OF TRANSPORTATION
STANDARD DRAWINGS FOR ROAD AND BRIDGE CONSTRUCTION
SALT LAKE CITY, UTAH

RECOMMENDED FOR APPROVAL — JULY 03.2002 DATE

CHAIRMAN STANDARDS COMMITTEE APPROVED — JULY 03.2002 DATE

DEPUTY DIRECTOR

TRAFFIC CONTROL ROAD CLOSED, DETOUR

STANDARD DRAWING TITLE

STD DWG
TC 7

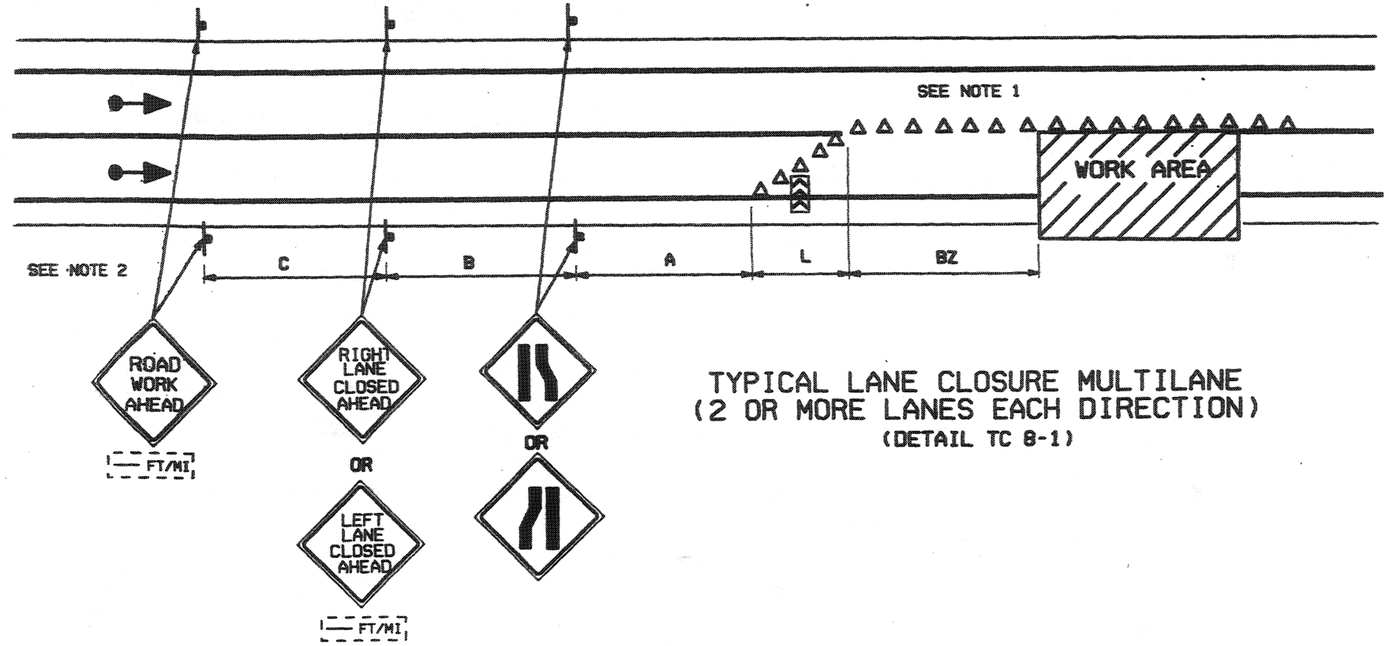

TYPICAL LANE CLOSURE MULTILANE
(2 OR MORE LANES EACH DIRECTION)
(DETAIL TC 8-1)

NOTES: DETAIL TC 8-1

1. USE PLASTIC DRUMS FOR ALL CHANNELIZING DEVICES FOR SPEEDS 50 MPH AND GREATER.
2. PLACE SIGNS IN MEDIAN/LEFT SHOULDER WHEN CONDITIONS PERMIT.
3. SEE STD DWG TC 2B FOR TAPER, BUFFER ZONE, AND SIGN SPACING CHART.

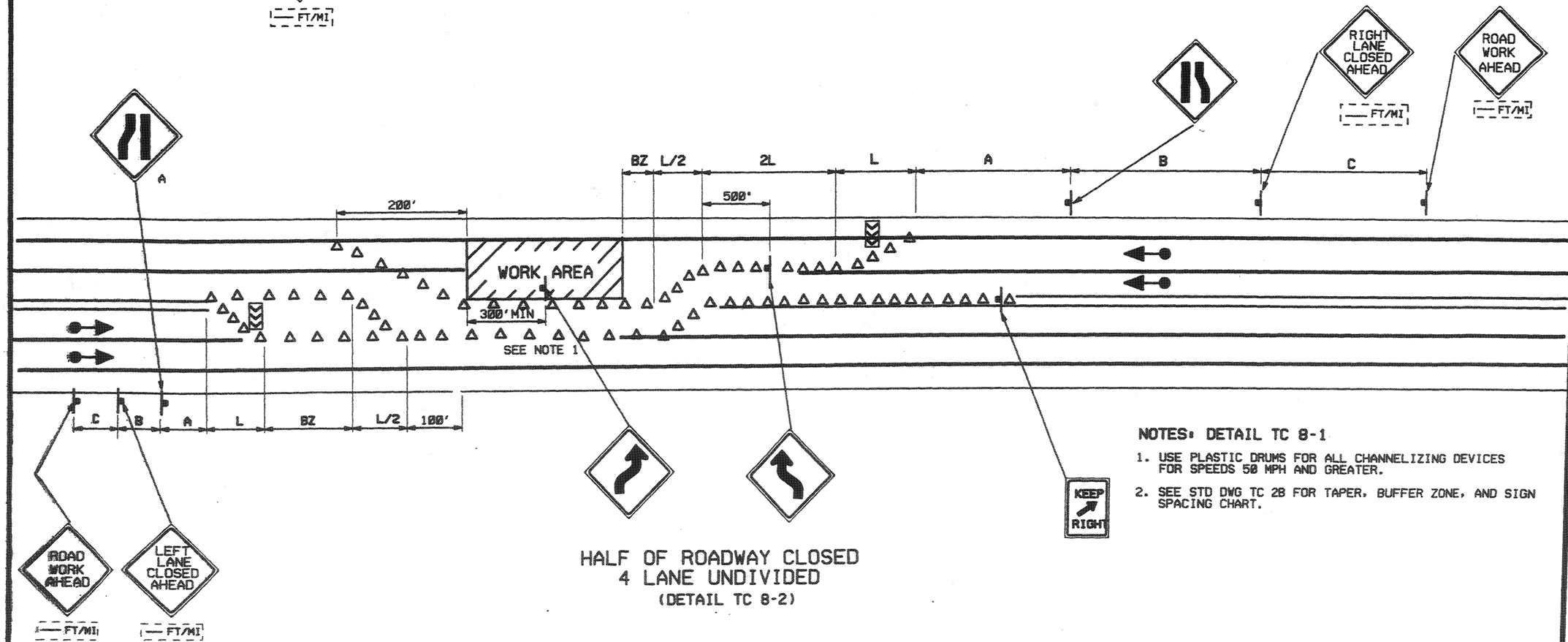

HALF OF ROADWAY CLOSED
4 LANE UNDIVIDED
(DETAIL TC 8-2)

NOTES: DETAIL TC 8-1

1. USE PLASTIC DRUMS FOR ALL CHANNELIZING DEVICES FOR SPEEDS 50 MPH AND GREATER.
2. SEE STD DWG TC 2B FOR TAPER, BUFFER ZONE, AND SIGN SPACING CHART.

REVISIONS

NO.	DATE	APPR.	REMARKS

UTAH DEPARTMENT OF TRANSPORTATION
STANDARD DRAWINGS FOR ROAD AND BRIDGE CONSTRUCTION
SALT LAKE CITY, UTAH

RECOMMENDED FOR APPROVAL — JULY 03,2002 DATE

CHAIRMAN STANDARDS COMMITTEE APPROVED — JULY 03,2002 DATE

DEPUTY DIRECTOR

STANDARD DRAWING TITLE
TRAFFIC CONTROL
LANE CLOSURE

STD DWG
TC 8

NOTE:
1. SEE STD DWG TC 2B FOR TAPER, BUFFER, AND SIGN SPACING CHART.

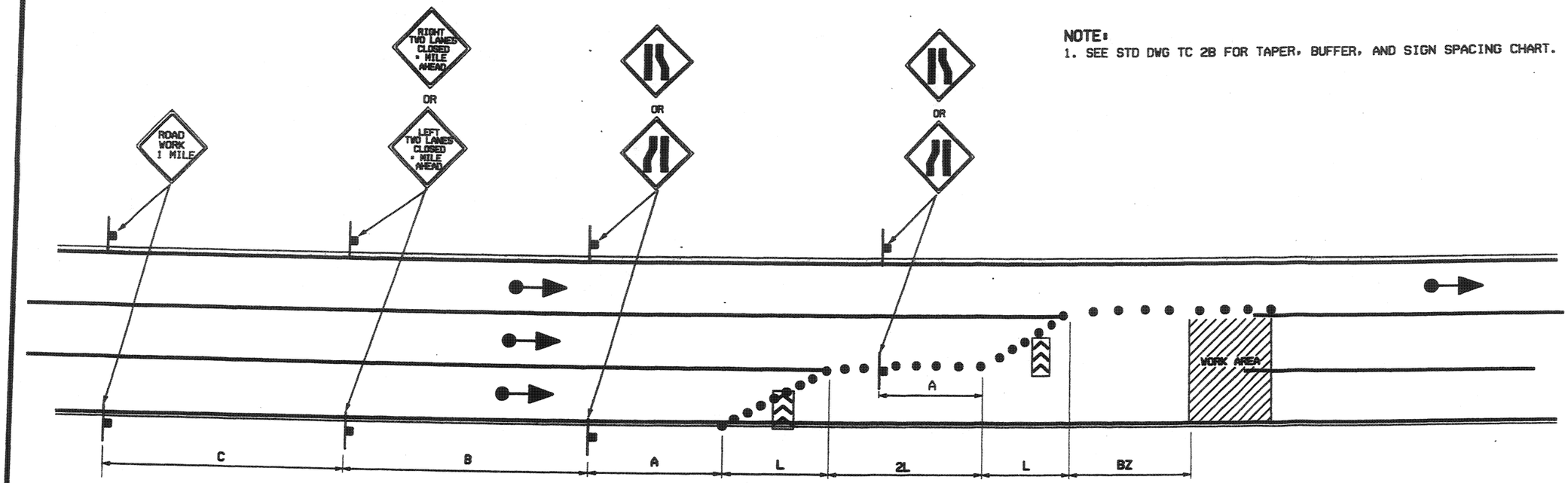

TWO LANES CLOSURE
(DETAIL TC 9-1)

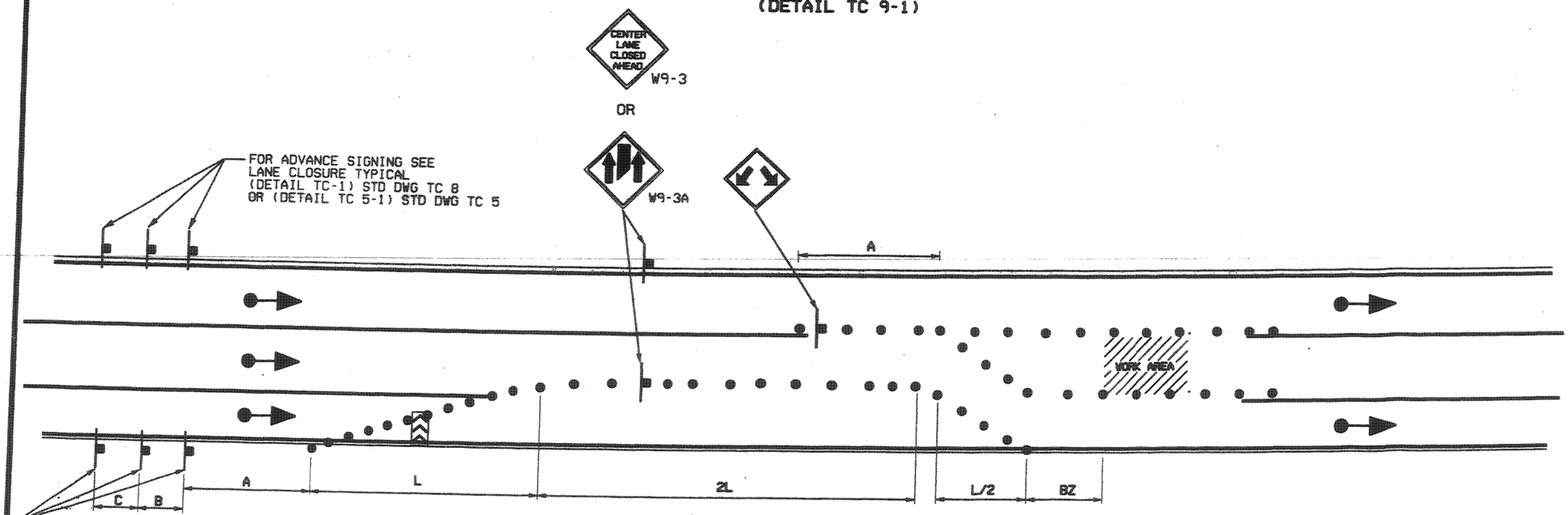

CENTER LANE CLOSURE
(DETAIL TC 9-2)

REVISIONS

NO.	DATE	APP'R	REMARKS

UTAH DEPARTMENT OF TRANSPORTATION
STANDARD DRAWINGS FOR ROAD AND BRIDGE CONSTRUCTION
SALT LAKE CITY, UTAH

RECOMMENDED FOR APPROVAL — JULY 03, 2002 DATE

CHAIRMAN, STANDARDS COMMITTEE APPROVED — JULY 03, 2002 DATE

DEPUTY DIRECTOR

TRAFFIC CONTROL MULTILANE CLOSURE

STANDARD DRAWING TITLE

STD DWG
TC 9

NOTES:

1. THREE MILES OR GREATER IS REQUIRED BETWEEN TEMPORARY MEDIAN CROSSOVERS OR TURNAROUNDS.
2. DO NOT USE A CROSSOVER OR TURNAROUND WHEN AN INTERCHANGE IS WITHIN 4 MILES OF THE PROJECT.
3. REGION TRAFFIC ENGINEER APPROVES ANY EXCEPTION TO NOTE 2.
4. CONSTRUCTION TRAFFIC CROSSING THE ACTIVE LANES HAS THE RESPONSIBILITY TO STOP OR YIELD TO THROUGH TRAFFIC. USE OF A FLAGGER IS PERMITTED IF SIGHT DISTANCE IS INADEQUATE FOR CROSSING TRAFFIC TO PROCEED SAFELY.
5. SEE STD DWG TC 2B FOR TAPER, BUFFER ZONE, AND SIGN SPACING CHART.

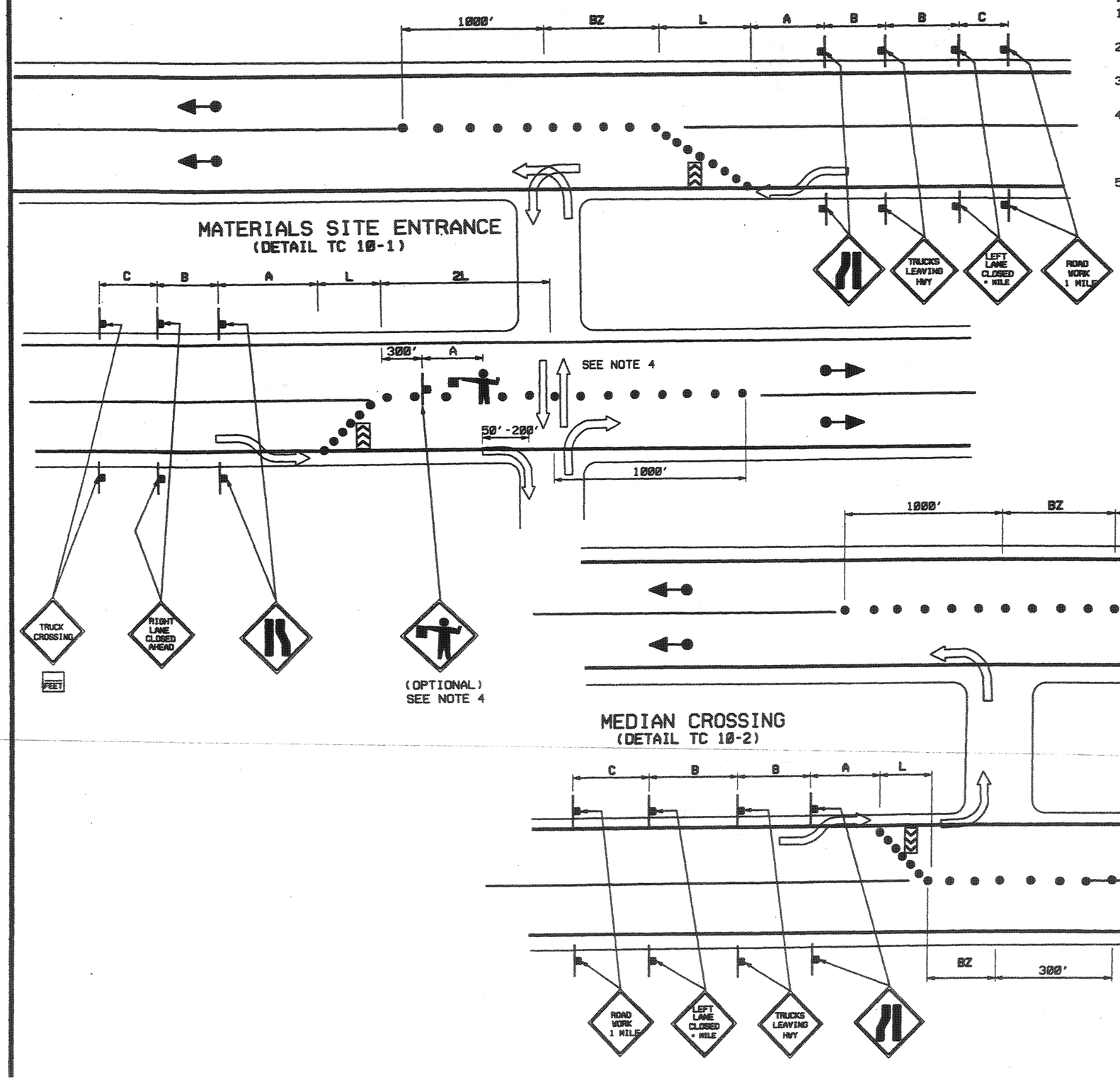

MATERIALS SITE ENTRANCE
(DETAIL TC 10-1)

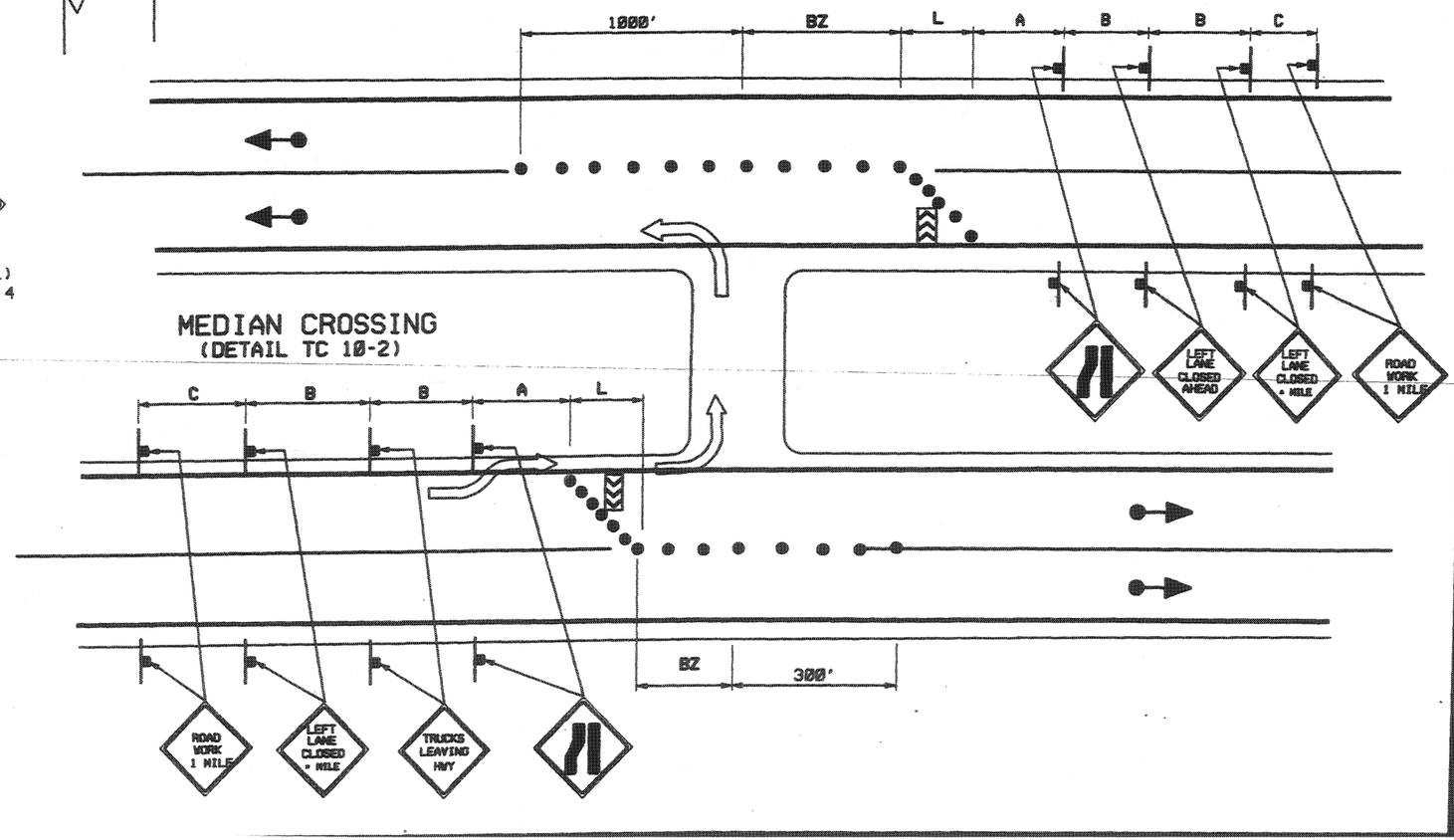

MEDIAN CROSSING
(DETAIL TC 10-2)

REVISIONS			
NO.	DATE	APPR.	REMARKS

UTAH DEPARTMENT OF TRANSPORTATION
STANDARD DRAWINGS FOR ROAD AND BRIDGE CONSTRUCTION
SALT LAKE CITY, UTAH

RECOMMENDED FOR APPROVAL — JULY 03,2002 DATE

CHAIRMAN STANDARDS COMMITTEE APPROVED — JULY 03,2002 DATE

DEPUTY DIRECTOR

TRAFFIC CONTROL EXPRESSWAY AND FREEWAY CROSSOVER/ TURN AROUND

STANDARD DRAWING TITLE

STD DWG
TC 10

TRAFFIC CONTROL FOR EXIT RAMP GORE

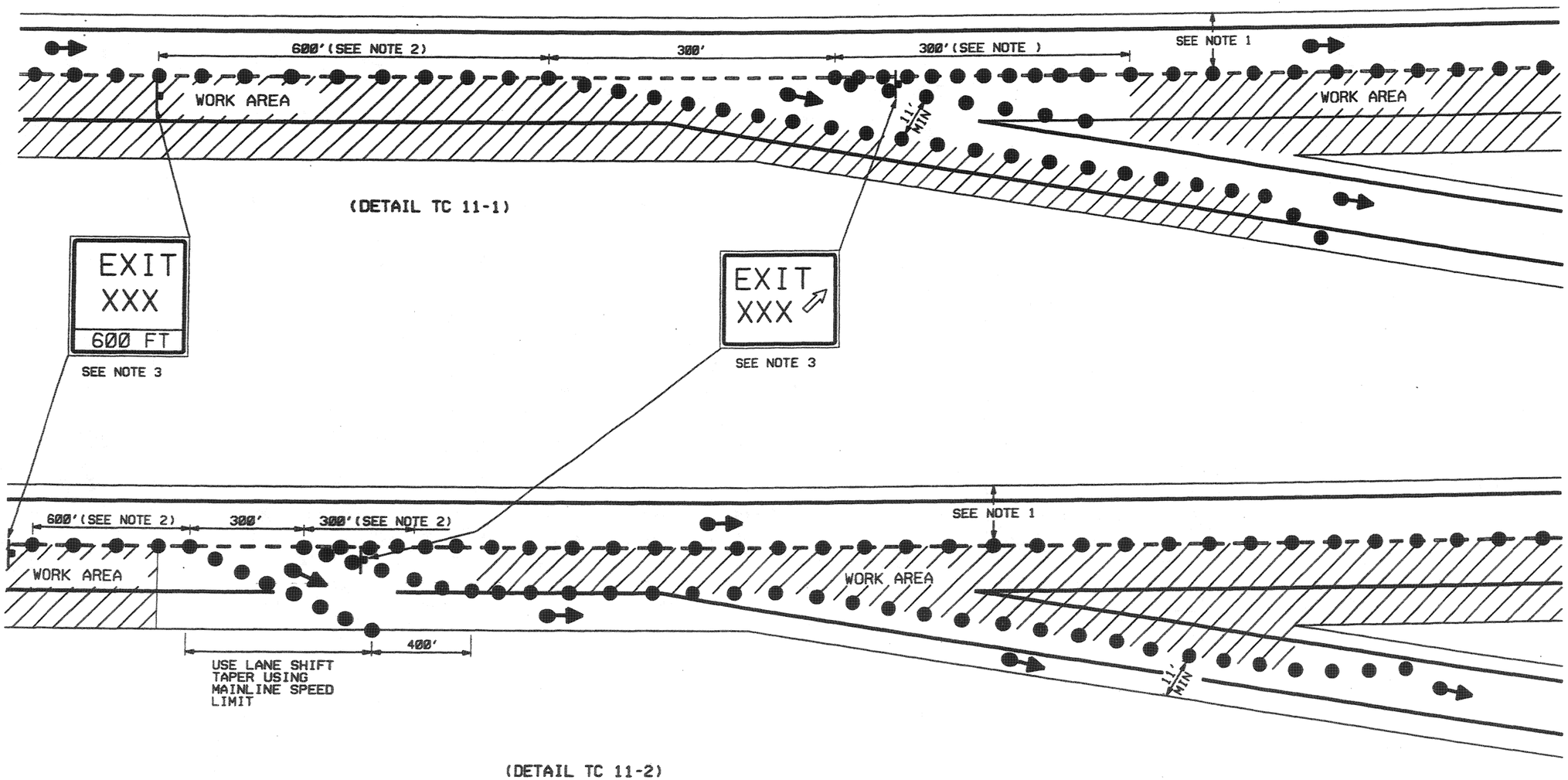

(DETAIL TC 11-1)

(DETAIL TC 11-2)

NOTES:

1. MAINTAIN 12' TRAVEL LANE AND 2' SHOULDER WIDTHS.
2. USE CHANNELIZING DEVICES SPADED AT 50'.
3. SEE STD DWG TC 1B.

REVISIONS

NO.	DATE	APPR.	REMARKS

UTAH DEPARTMENT OF TRANSPORTATION
STANDARD DRAWINGS FOR ROAD AND BRIDGE CONSTRUCTION
SALT LAKE CITY, UTAH

RECOMMENDED FOR APPROVAL — JULY 03, 2002 DATE

CHAIRMAN STANDARDS COMMITTEE

APPROVED — JULY 03, 2002 DATE

DEPUTY DIRECTOR

TRAFFIC CONTROL
EXIT RAMP GORE

STANDARD DRAWING TITLE

STD DWG
TC 11

TRAFFIC CONTROL FOR ENTRANCE RAMP GORE

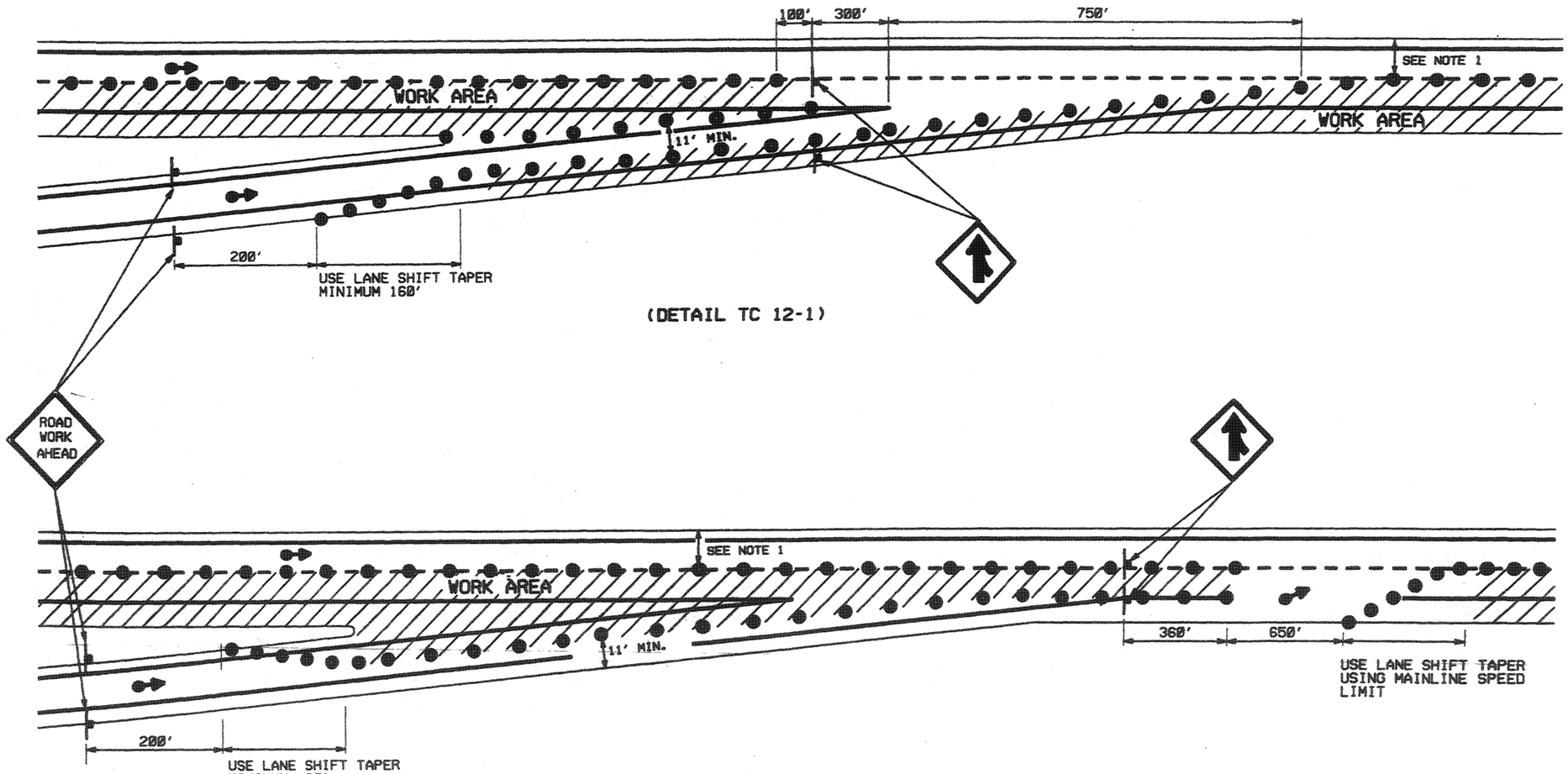

(DETAIL TC 12-1)

(DETAIL TC 12-2)

NOTE :

1. MAINTAIN 12' TRAVEL LANE AND 2'SHOULDER WIDTHS.

REVISIONS

NO.	DATE	APPR.	REMARKS

UTAH DEPARTMENT OF TRANSPORTATION
STANDARD DRAWINGS FOR ROAD AND BRIDGE CONSTRUCTION
SALT LAKE CITY, UTAH

RECOMMENDED FOR APPROVAL — JULY 03,2002 DATE

CHAIRMAN STANDARDS COMMITTEE APPROVED — JULY 03,2002 DATE

DEPUTY DIRECTOR

STANDARD DRAWING TITLE

TRAFFIC CONTROL
ENTRANCE RAMP GORE

STD DWG
TC 12

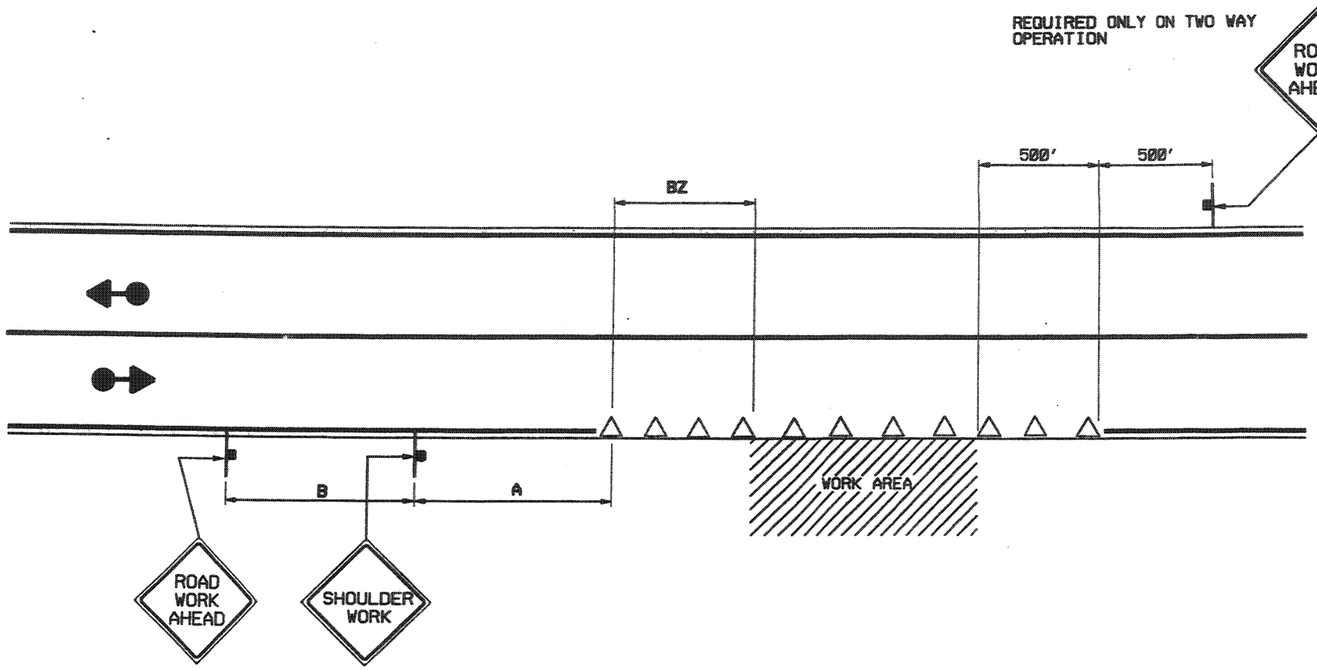

NOTES: DETAIL TC 13-1

1. USE CHANNELIZING DEVICES TO SEPARATE WORK ZONE FROM TRAVEL LANE WHEN WORK DURATION EXCEEDS 1 HOUR.
2. DO NOT ENCROACH INTO LANES.
3. SEE STD DWG TC 2B FOR TAPER, BUFFER, AND SIGN SPACING CHART.

SHOULDER OPERATION
(DETAIL TC 13-1)

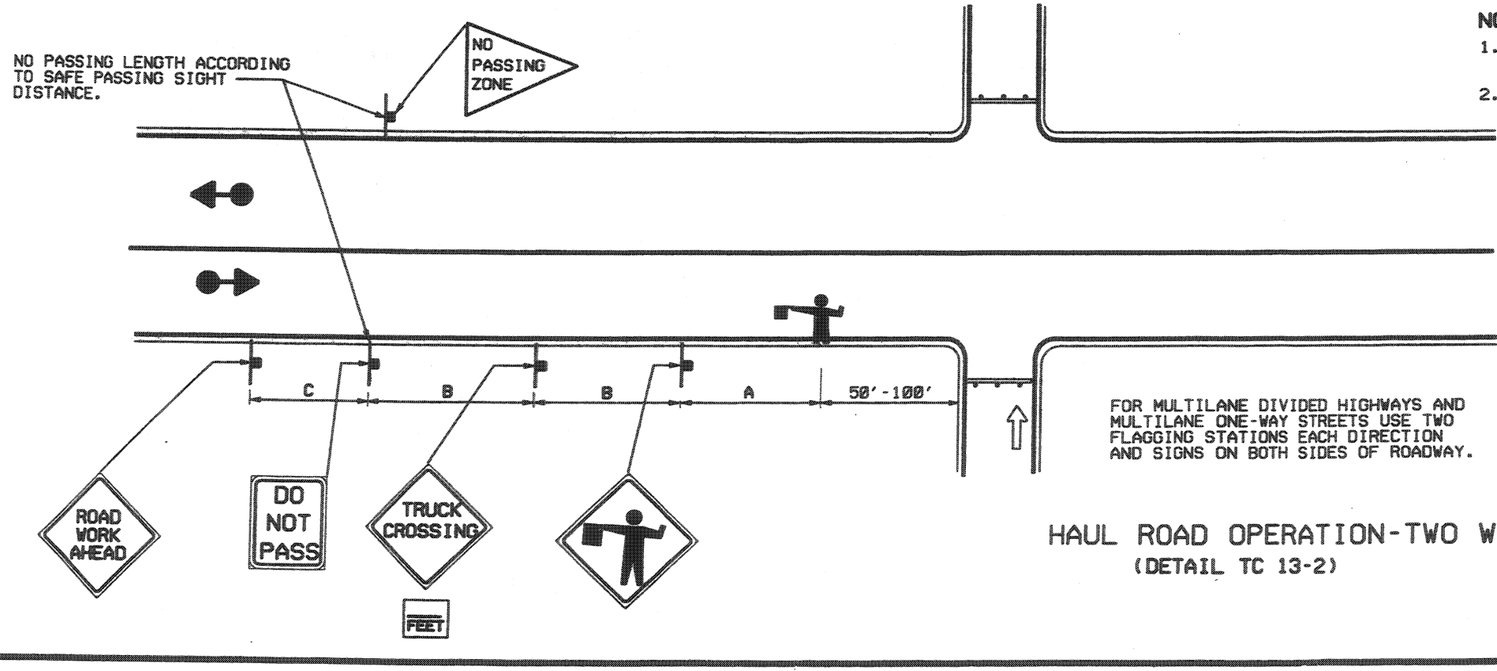

NOTES: DETAIL TC 13-2

1. INSTALL TYPE III BARRICADES WHEN HAUL ROAD IS NOT IN USE.
2. SEE STD DWG TC 2B FOR TAPER, BUFFER, AND SIGN SPACING CHART.

USE SAME SIGN SEQUENCE AND SPACING FOR OPPOSITE DIRECTION OF TRAFFIC.

FOR MULTILANE DIVIDED HIGHWAYS AND MULTILANE ONE-WAY STREETS USE TWO FLAGGING STATIONS EACH DIRECTION AND SIGNS ON BOTH SIDES OF ROADWAY.

HAUL ROAD OPERATION-TWO WAY
(DETAIL TC 13-2)

REVISIONS

NO.	DATE	APPR.	REMARKS

UTAH DEPARTMENT OF TRANSPORTATION
STANDARD DRAWINGS FOR ROAD AND BRIDGE CONSTRUCTION
SALT LAKE CITY, UTAH

RECOMMENDED FOR APPROVAL — JULY 03,2002 DATE

CHAIRMAN STANDARDS COMMITTEE APPROVED — JULY 03,2002 DATE

DEPUTY DIRECTOR

STANDARD DRAWING TITLE
TRAFFIC CONTROL
SHOULDER-HAUL ROAD

STD DWG
TC 13

NOTES:

1. USE A FLAGGER AT ALL INTERSECTING ROADWAYS. REFER TO STANDARD SPECIFICATION 01554, ARTICLE 3.5 A, FOR REQUIREMENT AT OPERATING TRAFFIC SIGNALS.
2. PROVIDE FLAGGING IF TURNING TRAFFIC CONFLICTS WITH ONE WAY TRAFFIC.
3. PROVIDE A DETOUR WHEN ROAD CLOSURE EXCEEDS 24 HOURS.
4. SEE STD DWG TC 28 FOR TAPER, BUFFER ZONE, AND SIGN SPACING CHART.

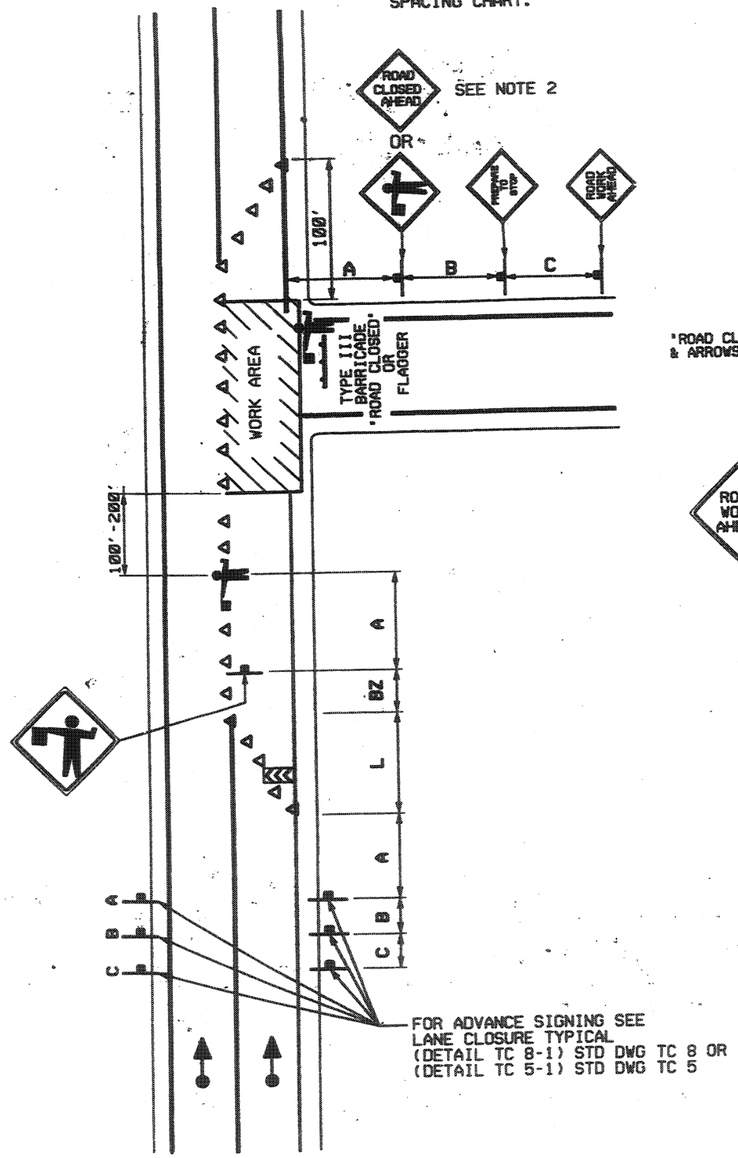

FLAGGING OPERATION - ONE WAY WITH POTENTIAL ENCROACHMENT BY WORK VEHICLE
(DETAIL TC 14-1)

USE SAME SIGN SEQUENCE, SPACING, & FLAGGER FOR OPPOSITE DIRECTION OF TRAFFIC.

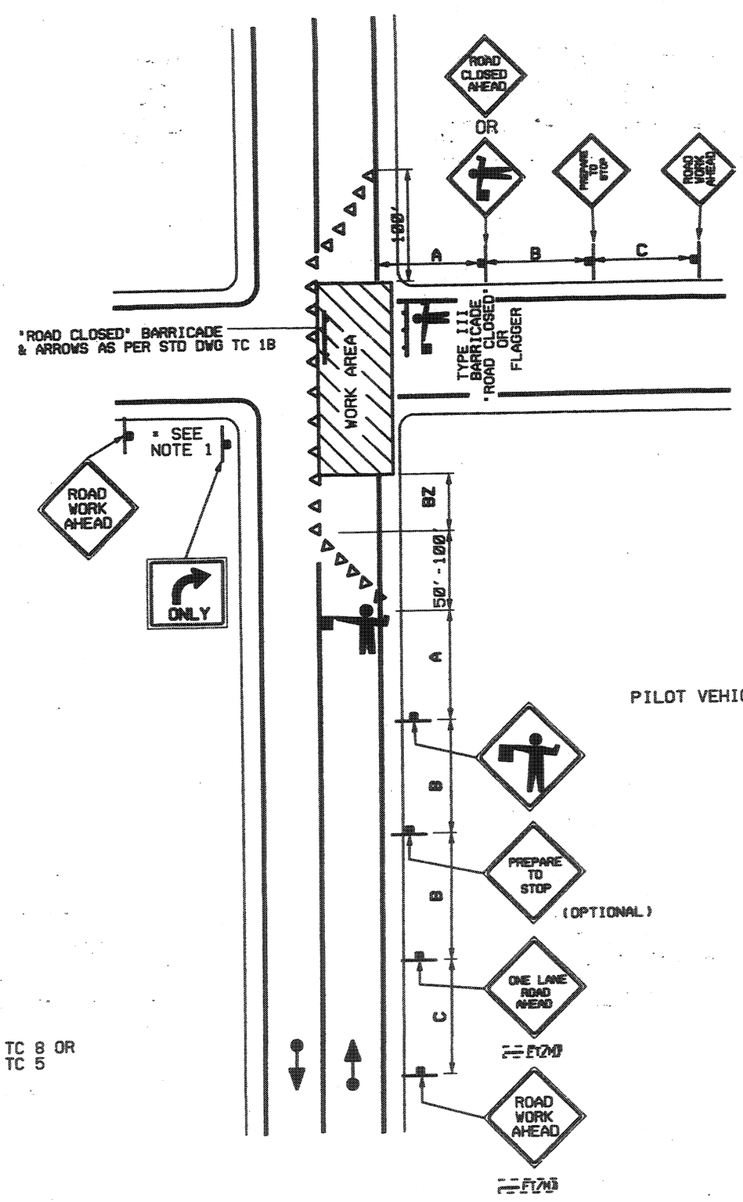

FLAGGING OPERATION - TWO WAY WITH ONE LANE CLOSED
(DETAIL TC 14-2)

USE SAME SIGN SEQUENCE, SPACING, & FLAGGER FOR OPPOSITE DIRECTION OF TRAFFIC.

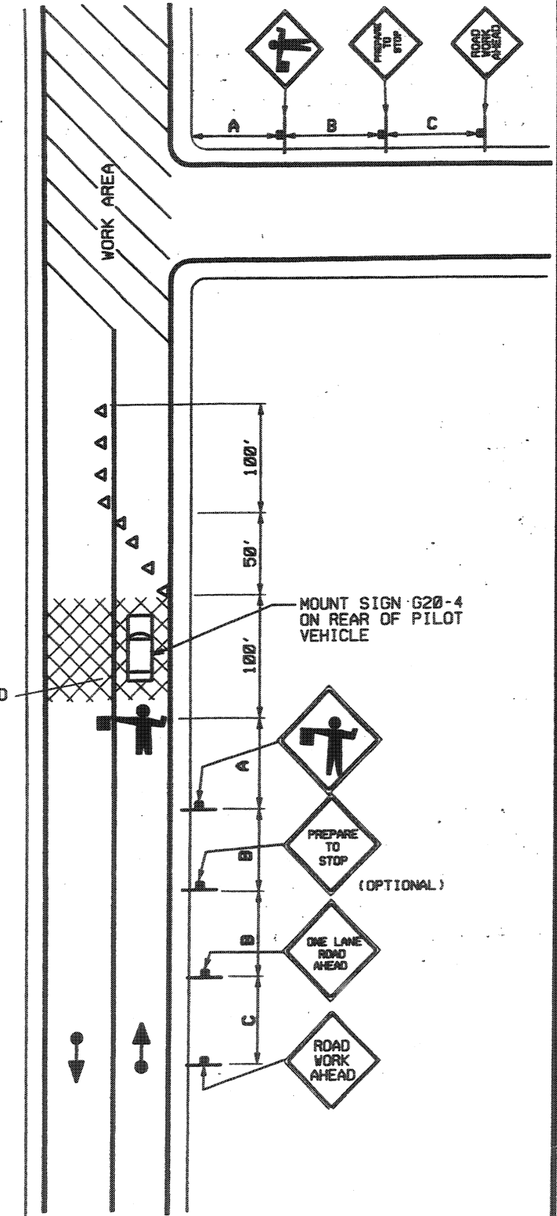

FLAGGING OPERATIONS WITH USE OF PILOT VEHICLE
(DETAIL TC 14-3)

REVISIONS

NO.	DATE	APPR.	REMARKS

UTAH DEPARTMENT OF TRANSPORTATION
STANDARD DRAWINGS FOR ROAD AND BRIDGE CONSTRUCTION
SALT LAKE CITY, UTAH

RECOMMENDED FOR APPROVAL — JULY 03, 2002 DATE

CHAIRMAN STANDARDS COMMITTEE
APPROVED — JULY 03, 2002 DATE

DEPUTY DIRECTOR

STANDARD DRAWING TITLE
TRAFFIC CONTROL FLAGGING OPERATION

STD DWG
TC 14