UTAH DEPARTMENT OF TRANSPORTATION

SAFETY AND HEALTH MANUAL

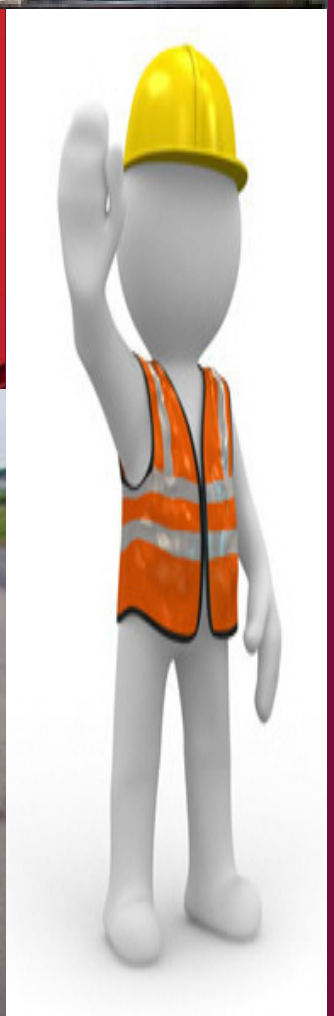

TABLE OF CONTENTS

UTAH DEPARTMENT OF TRANSPORTATION SAFETY AND HEALTH MANUAL
ABBREVIATIONS and ACRONYMS i
PREFACE i
1.0 INTRODUCTION 1-i
1.1 Construction Safety and Health Manual, Purpose and Scope 1-1
1.2 Safety and Health Program Objectives 1-1
1.3 Safety and Health Program Effectiveness 1-2
2.0 RESPONSIBILITY 2-3
2.1 General 2-3
2.2 The Resident Engineer - Project Safety 2-3
2.3 The Resident Engineer – Project Correspondence 2-4
2.4 The Project Safety Team 2-4
2.5 Resident Engineer / Inspectors 2-5
2.6 Region Safety Risk Manager will 2-6
2.7 Injury / Claims Management 2-6
2.8 Contractors 2-6
2.9 Safety Notice of Non-Compliance 2-8
2.10 Drug-Free Workplace Policy 2-8
3.0 INSTRUCTION AND TRAINING 3-9
3.1 Safety Orientation Program 3-9
3.2 Bulletin Board 3-10
3.3 Group Tours and Site Visitors 3-10
3.3.1 Conducting Tours 3-10
3.4 Security 3-11
4.0 REPORTING ACCIDENTS, INCIDENTS, AND OCCUPATIONAL INJURIES AND ILLNESSES 4-12
4.1 Investigating and Reporting Accidents/Incidents 4-12
4.2 Contractors Rights of Claims Management 4-13
4.3 Site Emergency Services Response Plan 4-13
4.4 Third Party Injuries and Property Damage 4-15
4.4.1 Accident and Incident Reports 4-15
4.4.2 Investigation Checklist 4-15
4.5 Accident Investigating Guide 4-16
4.5.1 Implementation 4-16
4.5.2 Witness Statements 4-18
4.5.3 How the Accident Occurred 4-18
5.0 PROJECT FIELD OFFICE SAFETY 5-20
5.1 Overview 5-20
6.0 HAZARD COMMUNICATION (HCS) 6-22
6.1 Overview 6-22
6.2 Hazard Communication Program Guidelines 6-22
6.3 Labels and Other Forms of Warning 6-22
6.4 Material Safety Data Sheets (MSDS) 6-23
6.5 Employee Information and Training 6-23
6.6 Specifications for Hazardous Communications Program Submittals 6-24

7.0 WORK PRACTICE CONTROL 7-25
7.1 Overview 7-25
7.2 Purpose and Scope 7-25
7.3 Specific Work Practice Control Procedures 7-25
7.4 Use of Handheld Electronic Devices 7-25
7.5 Personal Protective Equipment Details 7-26
7.5.1 Hand and Power Operated Tools 7-29
7.6 Job Safety Analysis (JSA) 7-30
7.6.1 Policy 7-30
7.6.2 Purpose 7-30
7.6.3 Responsibility 7-30
7.6.4 General Requirements 7-31
7.6.5 Implementation 7-31
7.6.6 JSA Documentation and Retention 7-32
7.7 Scaffolds and Work Platforms 7-33
7.7.1 Policy 7-33
7.7.2 Purpose 7-33
7.7.3 Definitions 7-33
7.7.4 Responsibility 7-34
7.7.5 Implementation 7-35
7.8 Walking and Working Surfaces 7-39
7.8.1 Policy 7-39
7.8.2 Purpose 7-39
7.8.3 Scope 7-39
7.8.4 Implementation 7-40
7.9 Fall Protection 7-47
7.9.1 Policy 7-47
7.9.2 Purpose 7-48
7.9.3 Responsibility 7-48
7.9.4 Implementation 7-48
7.9.5 Training Requirements 7-53
7.9.6 Certification of Training 7-54
7.9.7 Retraining 7-54
7.9.8 Definitions 7-54
7.10 Ladders 7-56
7.10.1 Policy 7-56
7.10.2 Purpose 7-56
7.10.3 Implementation 7-56
7.11 Confined Space Entry (CSE) 7-58
7.11.1 Policy 7-58
7.11.2 Purpose 7-59
7.11.3 Objectives 7-59
7.11.4 Definitions 7-59
7.11.5 Implementation 7-60
7.12 Employee Ground Transportation 7-61
7.12.1 Policy 7-61
7.12.2 Purpose 7-61
7.12.3 Responsibility 7-61

7.12.4 Implementation 7-61
7.13 Housekeeping 7-62
7.13.1 Policy 7-62
7.13.2 Purpose 7-62
7.13.3 Responsibility 7-63
7.13.4 Implementation 7-63
7.14 Signs, Signals and Barricades 7-64
7.14.1 Policy 7-64
7.14.2 Purpose 7-64
7.14.3 Responsibility 7-64
7.13.4 Implementation 7-64
7.15 Trenching and Excavation 7-66
7.15.1 Policy 7-66
7.14.2 Purpose 7-66
7.15.3 Scope 7-66
7.15.4 Implementation 7-67
7.16 Project Electrical Requirements 7-72
7.16.1 General 7-72
7.16.2 Hazardous Locations 7-72
7.16.3 Disconnect and Over current Protection 7-73
7.16.4 Ground-Fault Circuit Interrupters (GFCI) 7-73
7.16.5 Equipment and Maintenance 7-74
7.16.6 Installation 7-74
7.16.7 Visual Inspection 7-75
7.16.8 Hand Tools and Small Equipment 7-75
7.16.9 Grounding and Bonding 7-75
7.16.10 Fixed Equipment 7-75
7.16.11 Effective Grounding 7-75
7.16.12 Ground Resistance 7-75
7.16.13 Testing of Grounds 7-76
7.16.14 Wet Locations 7-76
7.17 Lock-Out/Tag-Out (LOTO) Procedures (JSA Required) 7-76
7.17.1 Policy 7-76
7.17.2 Purpose 7-76
7.17.3 Responsibilities 7-77
7.17.4 Implementation 7-77
7.17.5 Shutdown and Repair of Equipment or Systems 7-77
7.17.6 Starting Up Equipment or Systems 7-78
7.17.7 General 7-78
7.17.8 Safety Engineering Standard for Lockout/Tag-Out Procedure for Electrical or Electrically Powered Equipment 7-79
7.18 Nondestructive Testing 7-80
7.18.1 Policy 7-80
7.18.2 Purpose 7-80
7.18.3 Definitions (Ionizing Radiation) 7-81
7.18.4 Responsibility 7-82
7.18.5 Implementation 7-82
7.19 Concrete Operations 7-85

7.19.1 General 7-85
7.19.2 Concrete Mixing 7-85
7.19.3 Bulk Transportation 7-86
7.19.4 Concrete Cylinders 7-86
7.19.5 Reinforcing Steel 7-86
7.19.6 Concrete Placement 7-87
7.19.7 Concrete Forms 7-90
7.19.8 Placing and Removal of Forms 7-90
7.19.9 Slip Forms 7-91
7.19.10 Shoring 7-91
7.19.11 Single Post Shores 7-92
7.19.12 Re-shoring 7-92
7.19.13 Tubular Welded Frame Shoring 7-93
7.19.14 Tube and Coupler Shoring 7-93
7.19.15 Masonry Construction 7-94
7.19.16 Masons' Scaffolds 7-95
7.19.17 Material Handling, Storage and Use 7-95
7.19.18 Cement Handling 7-95
7.19.19 Brick Storage 7-95
7.19.20 Partition Blocks 7-96
7.19.21 Sand, Gravel and Crushed Stone 7-96
7.20 Pre-Cast Concrete 7-96
7.20.1 Lifting Devices 7-96
7.20.2 Jacking Equipment 7-97
7.20.3 Uniform Lifting 7-97
7.21 Pipelines 7-97
7.22 Cranes and Hoisting Equipment 7-98
7.23 Rigging 7-101
7.23.1 Responsibilities 7-101
7.23.2 General Rigging Procedures and Precautions 7-103
7.23.3 Chain 7-104
7.23.4 Wire Rope 7-106
7.23.5 Slings 7-109
7.24 Earthmoving Equipment and Trucks 7-114
7.25 Hot Work 7-116
7.25.1 Responsibilities 7-116
7.25.2 General Requirements 7-116
7.25.3 HOT WORK CHECKLIST PROCEDURES 7-119
7.25.4 FUMES AND GASES 7-120
7.25.5 GAS EQUIPMENT 7-121
7.25.6 ELECTRIC ARC WELDINGS 7-123
7.25.7 INERT-GAS METAL-ARC WELDING 7-125
7.26 Vehicle Identification 7-125

8.0 EMERGENCY ACTION PLAN 8-126
8.1 General 8-126
8.2 Supervisory Control and Responsibilities 8-126
8.3 Facilities 8-127

8.4 Assembly Areas 8-127
8.5 Training 8-128
8.6 Emergency Equipment 8-128
8.6.1 Survey of Equipment 8-128
8.6.2 Location of Equipment 8-128
8.7 Inclement Weather 8-129
8.7.1 Thunderstorm Safety 8-129
8.8 Bomb Threats 8-130
8.9 Preparation/Planning 8-131
8.10 Project Management - Evacuation Considerations 8-132
8.11 Telephone Procedures 8-132
8.12 Power Outage 8-133
Attachment 8-1 8-134
EMERGENCY ACTION PLAN 8-134
Attachment 8-2 8-137
BOMB THREAT INCIDENT REPORT 8-137
Attachment 8-2 (Continued) 8-138
9.0 ENVIRONMENTAL CONSIDERATIONS 9-139
9.1 General 9-139
9.2 Scope 9-139
9.3 Contractors 9-139
9.4 Supervision and Management 9-139
9.5 Employees 9-140
9.6 Storage of Chemicals and Fuels 9-140
9.7 Spill Control Definition and Control 9-141
9.8 Hazardous Waste and Documentation. 9-142
9.9 Abrasive Sandblasting 9-143
10.0 FIRE PROTECTION AND PREVENTION 10-151
10.1 General 10-151
10.2 Housekeeping 10-151
10.3 Fire Fighting Equipment 10-151
10.4 Fire Emergency Telephone Number 10-152
10.5 Fire Fighting Agency Action 10-152
10.6 Liquefied Petroleum Gas (LPG) 10-152
11.0 LEAD PROTECTION 11-153
11.1 IDENTIFYING/SAMPLING FOR LEAD HAZARDS 11-153
11.2 PLANNING FOR LEAD EXPOSURE 11-153
11.3 ESTABLISHING JOB SPECIFIC WRITTEN LEAD PROGRAM 11-153
11.3.1 Lead Training 11-154
11.3.2 Eliminating/Minimizing Exposure 11-155
11.3.3 Exposure Assessment and Air Monitoring 11-155
11.3.4 Personal Protective Equipment 11-157
11.3.5 Hygiene Practices and Controls 11-157
LEAD ABATEMENT TRAILER USE PROCEDURES 11-159

APPENDIX A-F 160

ABBREVIATIONS and ACRONYMS

ASME	American Society of Mechanical Engineers
CFR	Code of Federal Regulations
CSC	Confined Space Check list
CSE	Confined Space Entry
ESAP	Employee Safety Awareness Program
JSA	Job Safety Analysis
LOTO	Lock-out/Tag-out
MSDS	Material Safety Data Sheets
MSHA	Mine Safety & Health Administration
MUTCD	Manual of Traffic Control Devices
NIOSH	National Institute of Occupational Safety and Health
OSHA	Occupational Safety & Health Administration
PEL	Permissible Exposure Limits
PPE	Personal Protective Equipment
PPM	Parts per Million
RE	Resident Engineer
U.G.	Underground
UDOT	Utah Department of Transportation
UFC	Uniform Fire Code
UDOT/ENGINEER	Means the Owner or Owners Representative as it pertains to such construction job site. This will include UDOT (Utah Department of Transportation).
UDOT Safety/Risk Management Team	Means the Owner (UDOT / ENGINEER), working together to implement the insurance program.
Project Safety Team	Region Safety Risk Manager, RE and Contractor (see 2.4)

PREFACE

Contractors must utilize all or portions of this manual, whichever is more stringent, as the basis for their own safety and health plans. Each Contractor is responsible for protecting the health and safety of its employees while ensuring they have a safe and healthful place to work. This manual stipulates the minimum level of safety compliance required on UDOT projects, which applies to UDOT rights-of-way or temporary contractor facilities solely adjacent to UDOT projects.

The RE and Region Safety Risk Manager will monitor Contractors and-Subcontractor's implementation and application of their respective safety programs at the work site. The RE and Region Safety Risk Manager have the authority to stop work when either site conditions and/or work practices present an imminent danger (i.e. may result in serious injury, death or extensive property damage) until those conditions and/or practices are corrected. The RE may issue a "Safety Notice of Non-Compliance" letter to the Contractor. If corrective measures are not taken immediately no part of the time lost due to any such stop work order shall be made the subject of a claim for extension of time or increased costs by the Contractor or responsible Subcontractor. The RE and Region Safety Risk Manager shall not be liable for any damages experienced by the Contractor or responsible Subcontractor due to the work stoppage. Progress payments may also cease until UDOT is satisfied that the Contractor and/or its responsible Subcontractor are in full compliance with all applicable safety and health rules, standards and regulations.

The RE, Region Safety Risk Manager and Contractor shall have the authority to effectively remove from the site any person who is regarded as a frequent violator of safe work practices, or who fails to ensure persons working under their supervision or in a work place they control are not exposed to serious work hazards. Any "Responsible Person" assigned to identify existing and predictable hazards and authorized to eliminate them, that fails to perform this duty for any reason shall be replaced by the employer on recommendation by any noted above.

When confronted with minor to serious hazards, The RE or Region Safety Risk Manager will advise the responsible contractor of the condition, and obtain a date from that Contractor by which the minor to serious conditions will be abated (to be no more than 48 hours). The responsible Contractor will adopt means to prevent the exposure of its employees and others to the minor to serious condition. If the responsible Contractor fails to take corrective action by the agreed upon abatement date, the RE has authority to retain the necessary craftsmen to perform the work with the costs for all such labor and material being back charged against the responsible Contractor. In exercising this authority, the Contractor shall have no recourse against either the RE or the Region Safety Risk Manager for any damages that may arise as a result of such stoppage. Established work schedules will not be automatically extended to accommodate the period of any stoppage occasioned by such corrective work.

The Contractor shall not receive additional payment or reimbursement for safety items and procedures, which have been identified as required by the Safety Program.

Failure to comply with the contract safety requirements will be considered as non-compliance with the contract and may result in remedial action including withholding of progress payments due the Contractor and/or termination of the Contractor from the site.

In the event the work or any portion thereof is shut down by the UDOT Safety Team or an outside agency because of an unsafe condition, the responsible Contractor shall bear any costs that may be incurred by the Owner.

PROJECT SAFETY AND LOSS PREVENTION POLICY

The goal of the UDOT is to achieve zero accidents and injuries through, regular monitoring of work practices and the enforcement of safety standards. UDOT will partner with the Contractor to provide the workers an environment free of recognized hazards.

SAFETY RESPONSIBILITY

The General Contractor is responsible for the safe work practices of all workers on the project, including Subcontractors of any tier, including but not limited to truck haulers, suppliers, service providers, consultants and visitors. All personnel on the project will be required to adhere to full project safety standards.

UDOT Construction Projects will require that the General Contractor designate a Qualified Safety Person with verifiable broad based safety background. This will include completion of the OSHA 500 Train the Trainer course. The Qualified Safety Person on all projects will perform on site safety inspections on a weekly basis as long as the UDOT work zone inspections remain above 85/100. If UDOT work zone inspection scores fall below 85/100 the Qualified Safety Person will provide safety training on all violations noted on the inspection report. Qualified Safety Persons will be required to demonstrate proficiency to the Region Safety Risk Manager. The Qualified Safety Person may not have production related responsibilities on the project.

ANNUAL OSHA SAFETY TRAINING

Foreman and above expecting to work on a UDOT construction project must be able to demonstrate completion of a minimum of 10 hours of OSHA safety training during the current calendar year.

Once work starts on any UDOT construction project, it is understood that all preconstruction safety training has been conducted and furnished to all construction workers. The General Contractor is responsible for verifying professional skills and ability, he or she is also responsible for verifying that annual required OSHA training has been received.

PROJECT SAFETY INSPECTIONS / COURTESY INSPECTIONS

The Region Safety Manager will conduct one courtesy non-scored Work Zone Safety Inspection to help interested General Contractor's understand what the UDOT Work Zone Safety Inspections consist of. The courtesy Work Zone Safety Inspection, will be requested by the RE or Contractor.

UDOT RESPONSIBILITIES

The Region Safety Risk Managers are required to perform Work Zone Safety Inspections at least once every month. In the event a Work Zone Safety Inspection score falls under 85/100 or a severe safety violation is noted, a follow-up Work Zone Safety Inspection will be conducted within seven working days.

The Region Safety Risk Manager will maintain a database, by contract number, of all Work Zone Safety Inspections.

When a General Contractor's aggregate safety score falls below 80/100, the RE will immediately schedule a meeting involving project staff and the following: the Region Construction Engineer, the Region Safety Risk Manager, and such project Subcontractors that have contributed to the problem.

All Work Zone Safety Inspections will be immediately provided to the RE who will forward the results of the report to the General Contractor. If safety violations were identified, the Contractor will be required to correct the problems in the shortest possible amount of time and report back to the RE of the actions taken. Copies of all safety related correspondence to and from the Contractor shall be promptly sent to the Region Safety Risk Manager.

1.0 INTRODUCTION

1.1 Construction Safety and Health Manual, Purpose and Scope

The purpose of this manual is to outline a program for the prevention of job-related accidents and health problems during the construction of projects. This manual sets forth the many elements, which all Contractors and Subcontractors of every tier must include in their safety program. This manual is not all-inclusive. Other elements may be added, or conveyed individually to contractors to whom they expressly apply. There are other essentials, which some Contractors, by nature of the specific type of work being performed, must integrate within their own safety program.

The primary function of the RE, Region Safety Risk Manager and Contractor, as it relates to construction safety and health, is to monitor and ensure compliance with the safety and health standards required by law, and to administer and enforce the conditions of the contract pertaining to safety, health, and security.

This manual sets forth basic responsibilities, guidelines, rules, and regulations for all personnel involved in the construction project. The intent of this manual is to enhance and supplement the safety and health standards, which are required by law, in contract documents, and are applicable to the construction projects for which it is applied. This manual does not cover the full spectrum of published safety and health standards mandated by law, and the Contractors shall not assume that they are responsible only for those which are referenced in this manual, nor that they are current and quoted as published. It is the responsibility of the Contractor and it=s employees to ensure that they are in compliance with all safety directives required by law.

In the event of a conflict between the provisions of this manual and applicable local, State or Federal safety and health laws, regulations and/or standards, contract documents or the Contractor's Safety Plan the more stringent shall apply.

1.2 Safety and Health Program Objectives

An objective of the safety and health program is to assure that both the RE and Contractor personnel are treated as the most important assets of the project.

All Project safety and loss control efforts shall be directed toward eliminating personal injuries and damage to property.

The following objectives will be applied to the program:

1. Increase efficiency and cost reductions.

2. Comply with all applicable Federal and State standards.

3. Maintain a good working relationship with regulatory agencies.

4. Avoid citations and penalties.

5. Improve workers morale.

1.3 Safety and Health Program Effectiveness

The effectiveness of the Safety and Health Program will depend upon the active participation and personal cooperation of all. Project participation and coordination of efforts toward carrying out the following responsibilities are needed for an effective program. Project safety elements are to:

1. Ensure proper planning of all work to eliminate personal injury, property damages, and loss of productive efforts.

2. Establish and maintain a system for early detection and correction of unsafe practices and conditions.

3. Maintain adequate protection of adjacent public and private properties to provide for the safety of the public.

4. Establish and implement safety education programs designed to stimulate and maintain the interest and active participation of all personnel involved with the project.

2.0 RESPONSIBILITY

2.1 General

Each participant involved in the construction project is individually responsible for conducting their activities to ensure compliance with all applicable safety and health requirements. The Contractor with help from the RE and Region Safety Risk Manager are responsible to monitor the construction activities of the Contractors / subcontractors on construction projects to monitor compliance with OSHA, Federal, State, Local rules and regulations, the Contract and this manual.

2.2 The Resident Engineer - Project Safety

RE has overall responsibility for management of the construction project. This responsibility includes oversight of the Safety and Health of all personnel on the job sites, and monitoring that subordinate managers and staff are indoctrinated with the safety philosophy and commitment of the project Safety and Health Program. The RE may delegate authority to facilitate any and all aspects of the Safety and Health Program, and improvements are made where needed.

The following specific safety and health issues will be followed:

1. Establish and maintain a healthy and safe work environment by adhering to the guidelines and procedures in this manual.

2. Monitor compliance of RE employees and Contractors with Safety/Health and Security rules and regulation set forth by all regulatory agencies as well as those established by this program.

3. Evaluate upcoming work activities in order to identify and control any safety and health issues, which may pose a hazard to employees or others.

4. Conduct, weekly toolbox meetings with RE staff to discuss accident prevention measures, review any accidents which might have occurred since the last meeting, and institute any additional safety measures necessary to prevent future accidents.

5. Provide RE employees with knowledge of all Contractor/ Subcontractor safety and health programs that may be unique. The RE will give special attention to those operations that require a coordinated effort by the Contractors and the RE.

6. Maintain open communications with the Region Safety Risk Manager on safety/health, security, environmental and insurance issues.

7. Arrange for specific job safety training which may be needed by RE employees using or operating special equipment or entering confined spaces and/or the use of other personal protective equipment or other analysis instruments.

8. Provide project safety oversight audits to the Region Safety Risk Manager. The RE will conduct, at a minimum, a monthly project safety inspection with the Region Safety Risk Manager.

9. Regularly brief UDOT personnel of the potential safety and health issues that may affect the work environment. Briefings will include incidents that may pose a potential third party claim exposure to the Department.

10. Assist the Region Safety Risk Manager in the investigation of accidents and incidents. Assure corrective action is taken to prevent future accidents.

2.3 The Resident Engineer – Project Correspondence

The RE or his designee is the source of all official correspondence to and from the Contractors. The RE's Safety Responsibilities include:

1. Safety topics in every toolbox meeting.

2. Review any Safety inspection reports with the Contractors during the weekly progress meetings.

3. The Region Safety Risk Manager will coordinate with the RE if a Contractor has outstanding safety deficiencies that could result in delay of payment.

2.4 The Project Safety Team

The Project Safety Team will serve as the focal point for the administration of the project Safety and Health Program. The team's responsibilities will include the following duties:

1. Provide interpretation of current safety and health rules and regulations.

2. Conduct monthly safety inspections with the RE and the Contractor Safety Representative.

3. Review Contractor Site Specific Safety Plans.

4. At the discretion of the RE assist in the investigation of accidents and conduct accident review meetings within 48 hours of an accident.

5. When requested conduct hazard assessments to identify potential safety concerns and recommend procedures to eliminate or reduce the hazards.

6. Assist RE's staff and Contractors with safety/health and security issues.

7. Assist the RE in implementing project Safety and Security measures.

8. Attend Contractor toolbox safety meetings when possible.

9. Attend various site meetings including:

   a. Weekly progress meetings, when possible
   b. Contractor's toolbox safety meetings.
   c. Pre-construction meetings

10. Monitor timely correction of imminent hazards.

2.5 Resident Engineer / Inspectors

Field personnel duties encompass a wide range of activities. RE's field personnel will plan their activities with the same care and effort as other portions of their work program.

The safety responsibilities of the RE's field personnel include:

1. Verifying that work within their vicinity is performed in compliance with safe work practices and methods.

2. Correcting any unsafe act that they notice immediately, by talking with the employee(s) involved, contacting the Contractors supervision and the Region Safety Risk Manager. If an imminent danger situation exists, stop the activity immediately and contact the Region Safety Risk Manager.

3. Monitor personnel in their vicinity for PPE compliance.

4. Document safety violations, a copy will be in the project file and copy sent to the Region Safety Risk Manager.

5. Maintain current knowledge of all applicable Federal, State, and local safety and health standards and regulations; and assist in the application and administration of such requirements at the job site.

6. Attend all required safety and health training.

7. Conducting routine surveys of the work area and operations for compliance with Federal and State OSHA safety standards and regulations. Identify safety deficiencies and initiate corrective action

8. Recommending cessation of work in unsafe/unhealthful areas. Contact the Region Safety Risk Manager when these conditions are found.

9. Coordinating safety and health work issues with the RE and Region Safety Risk Manager.

2.6 Region Safety Risk Manager will

1. Give assistance to the RE and Contractors as needed with compliance of the contract.

2. Conduct monthly, or more often as determined necessary, safety audits of Contractor's work practices. In any instance where such a safety performance audit is found to have a number of safety violations or a severe safety violation is noted and a score of 85 or below, a follow-up safety audit may be conducted within seven working days to verify that safety violations have been adequately corrected.

2.7 Injury / Claims Management

The Prime Contractor shall be held responsible for all accident/incident reports regarding industrial injuries of their employees and all Subcontractors under contract to them.

2.8 Contractors

The Contractor is responsible for the safety/health of employees, Subcontractors, visitors, and vendors in accordance with State, Local and Federal regulations, and the contract documents. The Contractor will assign a competent and qualified safety person to the project based on the requirements established in the contract document.

As a condition of their contract, all Contractors shall:

Submit to the RE / Region Safety Risk Manager:

1. The name of the Contractors safety representative and a 24-hour emergency telephone number.

2. Copies of all weekly toolbox meetings.

3. Job Safety Analysis (JSAs) pre-work and as required.

4. A list of Hazardous Substances including the MSDS you will bring to site.

5. Employee orientation log.

6. Post a copy of OSHA 300 Log for the project.

The Contractor will:

1. Ensure that all employees, Subcontractors and their employees are given a comprehensive Safety/Health and Security orientation. This orientation shall include general Safety/Health and Security procedures and policies as well as the project specific rules, regulation and specific hazard. Employees will be advised that disregard for these rules, or any other applicable Safety and Health regulations shall be subject to company disciplinary action and/or removal from the project. At some site locations, employee access badges may be issued referencing the site's policy. All employees prior to starting work will sign employee logs. Badge numbers will be noted on this log.

2. Investigate accidents and incidents that result in lost time or are severe in nature to personal, or damage to buildings or equipment. Immediately contact the RE and/or Region Safety Risk Manager. The Contractor will complete all required reports and, if necessary, contact OSHA as required. Maintain all required records.

3. Conduct daily job inspections, identify unsafe conditions or work practices and assure they are corrected, and maintain documentation.

4. Assure that employees acting in a supervisory capacity understand and enforce all safe work practices. All foreman and above levels will have the required annual safety training. This documentation will be available for review. Foreman and above are required to attend 10 hours of OSHA hazard recognition training annually. Certified Instructors will conduct this training.

5. Assure that a qualified "Competent Person" is provided at work locations where required by OSHA as defined in this document.

6. Assure that all Personal Protective Equipment (PPE) is available and being used as required.

7. Assure all construction equipment and motor vehicles have a daily pre-shift inspection, repair and controls are in compliance with the safety requirements of the project and OSHA. Annual crane certifications must be presented to the RE prior to the crane starting work on the project.

8. Prior to making critical crane lifts, detailed plans (JSA) for completing them will be designed and submitted to the RE who will review the plan prior to any such lift. (See Appendix C, Critical Lift Checklist)

9. Assure that all hand and power tools are in safe working order.

10. Assure that all work areas are kept clear of debris and trash and adequate trash barrels are placed throughout the work area and emptied frequently. Contractor to provide an adequate sized commercial dumpster, or other means of trash collection, such as a dumping trash trailer. No used lumber with nails not pulled or clinched will be allowed to be stacked or dumped on the right of way. No burning of trash or waste wood will be allowed under any circumstances on UDOT property/rights of way.

11. Provide the appropriate number and types of sanitary facilities for employees.

12. Assure that fall protection equipment is provided and used. Inspections of this equipment shall be documented and on file for review (See Appendix F). The proper use of safety devices will be strictly enforced.

13. Assure that all perimeter cables, barricades, or any other safety-related items are installed correctly and maintained. If another Contractor must remove a safety item, coordinate this activity with the Contractor who installed the device and other Contractors who may be exposed. Safety devices will be replaced by the Contractor removing them. Warning signs, tags, or barricades will be installed if other safety devices are removed.

14. Assure that employees receive adequate training as required by the project and OSHA. Additional training for foreman and safety representative may be required based on unique hazards involved in a task.

2.9 Safety Notice of Non-Compliance

If the Contractor does not cooperate, the RE will determine whether or not a Safety Notice of Non-Compliance letter shall be issued to the Contractor.

2.10 Drug-Free Workplace Policy

The contractor will submit as a part of their overall Safety and Health Plan a copy of their company Drug-Free Workplace policy. This policy shall at minimum comply with Appendix I.

The prime contractor will ensure that all subcontractors and lower tier contractors are in compliance.

3.0 INSTRUCTION AND TRAINING

3.1 Safety Orientation Program

Newly employed, promoted, and/or transferred personnel will receive a comprehensive orientation regarding the general safety and health rules and regulations as well as the site-specific policies and hazards. The Contractor is responsible for the orientation of his employees, subcontractors, and visitors. Documentation of this orientation shall be submitted to the RE.

Safety orientation of all personnel will include at a minimum the following topics:

1. Project site-specific orientation
2. Employer/Personnel Responsibilities Under Utah and Federal OSHA Standards
3. Eye Protection
4. Head Protection
5. Confined Space Entry (CSE)
6. Proper Use of Safety Harnesses and Lanyards
7. Perimeter Guarding
8. Housekeeping
9. Fire Protection
10. First-aid Facilities and Emergency Procedures
11. Special Operator Requirements
12. Unique Hazards of the Project
13. Hazardous Communication/ Right to Know, location of MSDS's

14. Drug Free Workplace Policy

15. Accident Reporting Policy

16. Location of Required Posters

17. Job Site Security and Badding (if available)

18. Employee Parking Area (promote car pooling)

3.2 Bulletin Board

To aid in project training, a safety bulletin board will be established at the Contractor's field office/staging area. This board will be used to hold the following documents:

1. All project emergency telephone numbers,

2. Any required project safety and health posters,

3. Safety and health communications,

4. Hazardous material spill reporting information,

3.3 Group Tours and Site Visitors

3.3.1 Conducting Tours

It is particularly important that a high degree of protection be afforded to all persons on authorized tours of construction work-sites. The following instructions shall be complied with, as applicable, by the Contractor and those responsible for arranging such tours. The following procedures shall be followed:

1. In all cases, the RE shall be advised of any tour in a timely manner prior to the tour taking place.

2. Parties requesting the tour will coordinate the tour arrangements and ensure notification to the RE.

3. If visitors to the site will be on foot or out of the vehicle/bus the individual or organization requesting the tour will ensure that:

    a. The number of visitors - Tour groups in non-hazardous areas will be limited to no more than twenty-five persons per tour guide.

    b. Clothing - Visitors will be required to wear pants or slacks, shirt or blouses, and sturdy leather shoes or boots. Sneakers and high-heeled shoes will be prohibited.

c. Minors - Persons under 18 years of age will not be permitted on project tours, unless they have received special considerations from the RE.
d. Protective Equipment - Hard hats, eye protection, earplugs, and other protective devices will be required as per the UDOT Safety Plan.

e. Release and Hold Harmless Agreement - Each visitor shall be required to sign the visitor acknowledgment of the project rules agreement prior to the commencement of the tour.

f. All visitors shall comply with Contractor safety requirements.

g. Tours will be escorted by the RE's site personnel.

3.4 Security

Some job sites will be protected with a fenced perimeter. These sites will be controlled with onsite security services, vehicle access permits and worker identification badges. These controls do not release the Contractors of their responsibility for the security of their own equipment and materials.

For those sites that are not able to be controlled at a main access point the Contractors are fully responsible for the security of their equipment and materials. The RE will inspect the Contractor's project to ensure adequate security measures are being taken to protect materials, structures and limit liability exposures. If the RE finds security measures to be inadequate the contractor will be notified and additional measures to improve security will be required at no cost to the owner based on contract requirements. This may include storage of materials off site.

4.0 REPORTING ACCIDENTS, INCIDENTS, AND OCCUPATIONAL INJURIES AND ILLNESSES

4.1 Investigating and Reporting Accidents/Incidents

Prompt, thorough investigation and reporting of accidents/incident on any **Project** is imperative. Accidents and Incidents are defined as follows:

Accidents are unplanned events not involving vehicles that result in:

1. Personal injury or death.

2. Equipment or property damage, including damage from fire.

3. Near misses that had the potential for serious injury or death.

4. Exposure to potentially hazardous chemicals.

Incidents are events that fall under one or both of the following categories:

1. Events involving vehicles:

    a. Near misses,
    b. Property damage,
    c. Personal injury or death.

2. Property theft.

All UDOT, Contractor, and Subcontractors employees are required to cooperate fully in the investigation by the RE and/or Insurance Carrier of any accident or incident as defined above.

If an accident or incident occurs involving a Contractor, Subcontractor, or visitor, the RE and Region Safety Risk Manager must be notified **immediately**.

In the event of a serious accident/incident, NOTHING may be removed from the scene of the accident/incident until the investigation is completed.

If a serious accident/incident occurs involving personal injury, the site Emergency Services Response Plan (see section 4.3) will be implemented. The Contractor involved will be responsible for contacting OSHA when required. Written documentation of this contact will be submitted to the RE with the accident report within **24 hours**.
If the accident/incident has an environmental impact, the appropriate measures will be taken to control any spills with no employee exposure. Refer to hazardous materials spills and controls (See Appendix B of this plan).

A Post-accident review meeting will be held within 48 hours of any accident/incident or that results in a Lost Time Injury, if an employee is transported from the site by Emergency Medical Services (EMS), if property damage occurs over $500.00, or as deemed necessary by the RE or

Region Safety Risk Manager. The project safety team as directed by the RE may review any near miss or potentially dangerous incident. Attendance at these meetings by the Contractors Project Manager and Safety Representative is mandatory.

After an investigation has been completed, the Contractor shall submit to the RE and assigned Insurance Company, the required reports of all accidents or incidents as defined above. The written reports shall be submitted within 24 hours of the occurrence. (If the investigation is not complete, an initial report must be submitted). Additionally, the RE will verbally advise the UDOT on-site representative as soon as the basic facts are known.

4.2 Contractors Rights of Claims Management

The Contractor has the right and is encouraged to escort an injured or ill employee to the designated medical facility. (It is not recommended that the injured individual transport them self to the medical facility on the initial visit).

On all claims, the Contractor may arrange meetings with the insurance company to discuss any claim or claims history. We encourage Contractor involvement in the management of employee injury claims.

4.3 Site Emergency Services Response Plan

If an accident occurs that requires emergency services response (ambulance, Fire Dept., Police, etc.) to the site, the parties involved will:

1. **Call 911**

   a. Give your name.
   b. Give your location.
   c. Name of project.
   d. Phone number you are calling from.
   e. Nature of injury/accident situation.
   f. Tell them that an escort will meet them at the site entrance gate.

   Note: When calling 911, DO NOT HANG UP until the 911 Operator understands all information relayed. Let the 911 Operator hang up first. If at all possible **avoid using a cell phone** to make a 911 call.

2. Send a company supervisor, in a vehicle (if necessary), to the site entrance to wait for the emergency vehicle. (Note: Do not drive at excessive speed or create an additional hazard by driving unsafely)

3. The RE will be contacted at _____. The following information will be given:

a. Name of person calling/name of company.
b. **Exact** location of the accident.
c. Nature of incident/injury.
   - If site evacuation is necessary, the RE will implement the site Emergency Action Plan.
d. Advise the RE if emergency services have been contacted.

The RE's site personnel will assist the Contractor by clearing the area as needed.

When an emergency situation occurs it is imperative that personnel stay calm and remember:

1. Never move an injured employee unless he/she is exposed to further injury. (Always support the head, neck, and spine).

2. Cranes in the area of an injured employee can be unloaded and ready to help move an injured employee, providing proper equipment (communication, rigging, approved crane, etc.) is available and the involved Contractors mutually agree to the use of the procedure. Mutual agreements between Contractors should be reached before an emergency occurs.

3. Never enter a confined space or excavation unless required safety measures have been taken.

4. Accident investigation and accident review with the RE, Region Safety Risk Manager, Contractor Project Manager, and Contractor representatives will be held within 48 hours following the accident.

5. If an accident occurs after hours or on a weekend, please use the emergency phone list to contact the following: site specific contacts and emergency phone numbers will be provided during the pre-construction orientation.

4.4 Third Party Injuries and Property Damage

4.4.1 Accident and Incident Reports

Accident reports involving any outside parties or property will include at a minimum, the items listed in the paragraph below. In the event of a fatality or serious injury, or a major accident involving outside (non-employee) persons, the incident must be reported **IMMEDIATELY** to the Contractor's Safety Representative and the Region Safety Risk Manager.

If an accident occurs after hours or on a weekend, please use the emergency phone list to contact the following (to be provided during pre-construction conference):

RE (Resident Engineer)	Work: _____
	Home: _____
	Mobile: _____
Region Safety Risk Manager	Work: _____
	Home: _____
	Mobile: _____

4.4.2 Investigation Checklist

Investigation checklist of the minimum information required when accident involves outside persons or property should include the following information:

1. Date and time of incident.
2. Exact location and address of incident.
3. Full names of all parties involved in the accident, including witnesses.
4. Complete addresses and telephone numbers.
5. Injured person's occupation, age, and employer.
6. Description of what injured person was doing when hurt.
7. Nature and extent of the injury.
8. Where injured was taken for treatment and how?
9. Description of property damaged, identification numbers, etc.

10. Owner of property damaged and address of owner.

11. Year, make, model, serial number, license number of vehicle.

12. Names of other party's insurance company(s).

13. Witnesses' statements or accounts of accident.

14. Names, addresses, occupations of company personnel involved in accident and how involved.

15. Fully describe details of incident to answer the basic how, when, why questions.

16. Name and identification of person completing report.

17. Signature of Contractor's safety representative.

18. Any photographs if possible.

4.5 Accident Investigating Guide

These guidelines are provided to assist personnel in completing required company forms and conducting effective and complete investigations, determining causes and implementing necessary remedial action.

4.5.1 Implementation

1. Injured Employee(s)

Personal information about the injured employee(s) should include:

a. Name

b. Employer

c. Age

d. Occupation

e. Residence

f. Home Phone Number

g. The Insured's direct supervisor

2. Supplemental Information

   It is equally important to document peripheral information that may have an effect on the accident. Such information might include:

   a. The names, addresses, telephone number and employers of all witnesses.

   b. The date and time of the accident.

   c. The weather conditions at the time of occurrence; e.g., clear and sunny, cold and windy, etc.

3. Accident Location

   Detail the exact location of the accident within the work site and, if necessary, include a plot plan and photographs.

4. Work assignment at the time of the accident

   Describe the complete scope of the work being performed by the injured employee, giving the exact job the injured was performing when the accident occurred. Was the injured working at his work assignment at the time of the accident? Include the overall experience of the injured.

5. Photographs and/or sketches of the Accident Scene

   a. Photographs: As a matter of procedure, 35 mm photographs <u>or secured digital photos</u> of the accident must be taken as soon after the accident as practicable. <u>Photographs taken by UDOT or the Contractor will be reviewed as needed for documentation purposes.</u>

      Photos must include the equipment involved in the accident.

      Note: A photo log must be kept detailing the following:

      - Date and time the photo was taken.
      - Location of the photographer.
      - Time the photo illustrates.
      - Name of the photographer.
      - Direction (north, south, east, west, top, or bottom).
      - Frame number of the photo taken.

DO NOT WRITE WHAT THE PHOTO DEPICTS DIRECTLY ON THE PHOTOGRAPH.

b. Pictures can be extremely useful for illustrating the accident scene and its relationship to other locations at the construction site.

   Remember: Distances indicated on a picture must be pre-measured and indicated for each picture.

6. Video documentation in addition to photographs will be used at the discretion of the Contractor and the RE.

4.5.2 Witness Statements

In addition to accident photos, witness statements are crucial pieces of evidence that must be accurately gathered to present a clear picture of how the accident occurred. Witness statements will be taken and submitted to the Region Safety Risk Manager as part of the accident investigation report.

4.5.3 How the Accident Occurred

The key element to an accident investigation is to determine how it occurred. Since years may sometimes pass before the accident facts are reviewed by an outside agency, accident reports and statements should incorporate all the accident facts, to present a clear, concise word picture of the chain of events that preceded the accident.

Both the primary and secondary causes of the accident must be detailed.

1. Primary causes of accidents are those elements that directly caused the injury to occur; i.e., an employee falling from an improperly tied-off ladder.

2. Secondary causes of accidents are those elements that indirectly cause an injury to occur; i.e., a ladder is too short or, possibly, another method might be used.

Accident Analysis

1. Nature of the Injury: what is the injury? If there were multiple injuries, these must be specified.

2. Part of the Body Affected: the specific part(s) of the body injured must be specified.

3. The Source of Injury: That piece of equipment, substance, or exposure most related to the injury.

4. Accident Type: How did the injured person come in contact with object, substance, or exposure?

5. Physical/Mental Condition: The physical/mental condition of the employee, as gained from witness statements, should be recorded.

6. Hazardous Conditions: Were there any hazardous physical or environmental conditions or circumstances that caused or impacted on the accident?

7. Unsafe Act: Were there any unsafe acts that caused the injury? If other contributing factors are relevant (experience, time, on-job, etc.), these facts should also be highlighted.

5.0 PROJECT FIELD OFFICE SAFETY

5.1 Overview

Office environments are normally safe places to work. However, if housekeeping and maintenance are substandard and safety precautions are not considered the probability of accidents and injuries increase dramatically.

Many of the injuries in offices are associated with slips, trips, falls, and lifting. Additional sources of injury are improper location of equipment, electrical cords and furniture. Some precautions for office safety include:

1. Be careful in swivel chairs. Do not slump back in them without first testing your weight gradually.

2. Have a firm footing when climbing. Use a safe stepladder.

3. Walk, do not run, in corridors or on stairs. Use handrails.

4. Do not stand in front of closed doors; they may open suddenly.

5. Do not push or crowd at elevators, entrances or on stairways.

6. Read mail and other materials at your desk - not while walking.

7. Watch for telephone cords, office machine electrical cords, wastebaskets, and other hazards underfoot which may cause tripping.

8. Use handles when closing files, desk drawers, safe and doors.

9. Keep file and desk drawers closed when not in use. Open only one file or desk drawer at a time.

10. Check office furniture regularly for sharp edges or splinters and loose casters or bolts.

11. Keep sharp objects in a safe place. Handle them carefully.

12. Be sure typewriters, personal computers, phones and printers are solidly placed.

13. Do not adjust or clean power-driven office machines while energized.

14. Do not attempt to make repairs on equipment. Call a qualified technician.
15. Obey “No Smoking” signs. Utah Clean Air Act prohibits smoking in any public building.
16. Use properly grounded circuits for all electrical equipment.
17. Get help when lifting heavy objects. Always use proper lifting techniques.
18. Never use office furniture as steps to reach high objects.
19. Store flammables in proper storage cabinets, not in the office.
20. Inspect fire extinguishers and assure employees are trained in their use.
21. Have emergency phone numbers posted by each phone.
22. Conduct fire drills annually.
23. Post evacuation and meeting locations in large buildings.
24. Never overload electrical outlets or run cords in walkways.
25. Avoid placing cabinets or bookshelves where they can be easily toppled or cause injury.
26. Mobile job-site office trailers shall have sturdy access platforms with handrails on all exposed sides: on both steps and platforms.

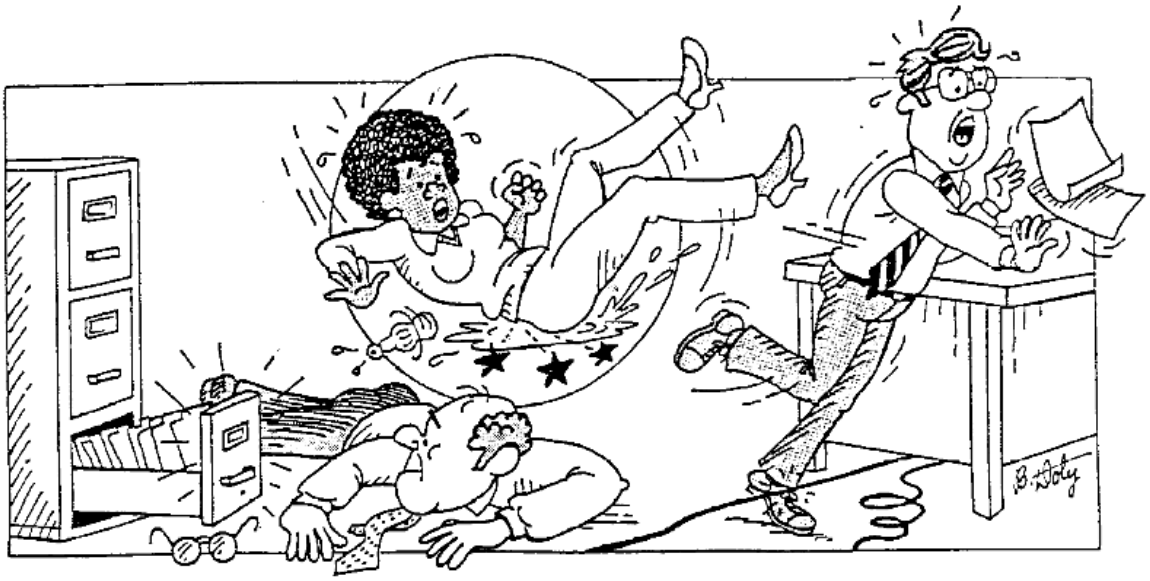

6.0 HAZARD COMMUNICATION (HCS)

6.1 Overview

The Hazard Communications Standard (HCS), as mandated by OSHA, charges that Contractors are responsible for assessing workplace hazards associated with the use or exposure of all chemicals, and transmitting information concerning the hazards to affected employees. Information is transmitted by means of a Hazard Communication Program. The Hazard Communication Program shall contain the following elements.

6.2 Hazard Communication Program Guidelines

1. The Contractors must develop, implement and maintain at the work place a written Hazard Communication Program describing how each of the elements will be met. The following must be included:

    a. An inventory list of the hazardous chemicals known (or suspected) to be present at the site, and a copy to the RE along with MSDS.

2. Methods to be used to inform employees of the hazards of non-routine tasks.

    Note: Contractors who produce, use, or store hazardous chemicals in such a way that the employees of other Contractors may be exposed shall additionally ensure that the Hazard Communication Program developed includes the following:

    a. Methods to be used to provide the other employees with a copy of the MSDS, or should be made available in a central location in the work place, for each hazardous chemical that the other employees may be exposed to while working.

    b. Methods to be used to inform employees of steps to be taken to protect employees during normal operations and in foreseeable emergencies; and,

    c. Methods to be used to inform the other employees of the labeling system used in the work place.

6.3 Labels and Other Forms of Warning

All hazardous chemicals must display appropriate labeling.

6.4 Material Safety Data Sheets (MSDS)

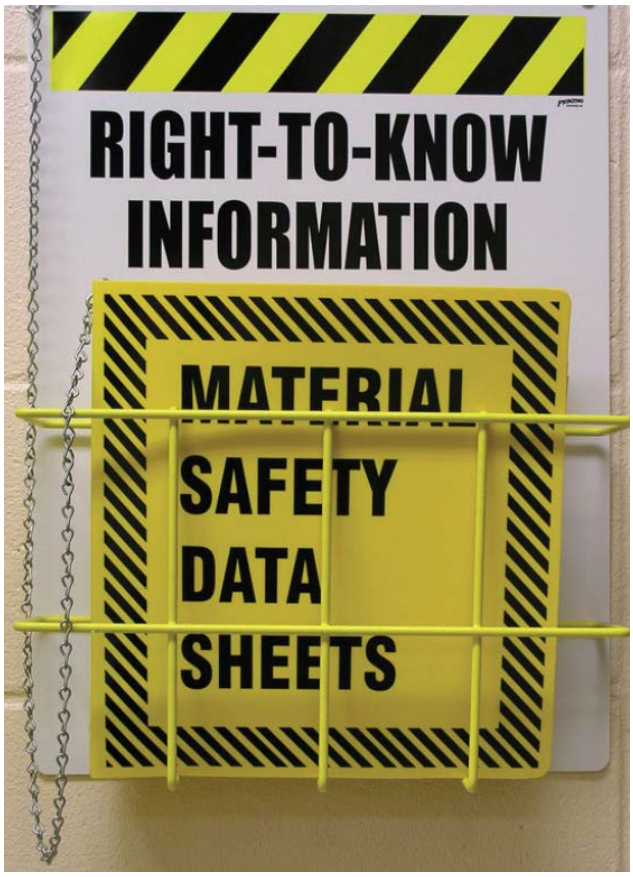

Contractors must maintain MSDS for each hazardous chemical used. Additional Contractor responsibilities for MSDS include:

1. Maintain copies at the project site of the MSDS for each hazardous chemical in the work place, and ensure that they are readily accessible to employees.

2. The MSDS will be kept at each Contractor location so any employee can immediately obtain the required information.

3. Copy all MSDS information to the RE and note where material will be stored and used on Project site.

6.5 Employee Information and Training

Contractors must provide employees with information and training on hazardous chemicals in their work area at the time of initial assignment and whenever a new hazard is introduced.

1. Information must include:

   a. Requirements of the Hazard Communications Standard,

   b. Any operation in their work area where hazardous chemicals are present,

   c. Location and availability of the written program, including the list(s) of hazardous chemicals and MSDS.

2. Training must include:

   a. Methods that can be used to detect the presence or release of hazardous chemical in the work area,

   b. Physical and health hazards of the chemicals in the work area,

   c. Personal protective measures and equipment,

   d. Specific details of the employers Hazard Communication Program.

Employee training for this requirement shall be documented and acknowledged by employee signatures following each session. This documentation will be maintained at the job site for review.

6.6 Specifications for Hazardous Communications Program Submittals

The Contractor shall submit to the RE a copy of the site Hazard Communication Program (including MSDS) prior to beginning on-site construction activities.

1. Material Safety Data Sheet (MSDS) Master File

   The master file shall be set up and maintained by the Contractor. This information will be available for use in emergency situations (i.e., spill, fire, employee exposure).

2. Audit and Review

   It is the responsibility of the Contractor Safety Representative to review the employer's Hazard Communication Program on at least an annual basis. All revisions and updates shall be incorporated to reflect changes in the purchase, use, storage and handling of hazardous chemicals at **Project** work sites.

   It is also the responsibility of the Contractor Safety Representative to periodically audit procedures in the use of hazardous materials and to institute corrective action where required to meet the requirements of the Hazard Communication Program.

7.0 WORK PRACTICE CONTROL

7.1 Overview

The primary focus of this Safety and Health Manual is to provide guidance for the Engineers and Contractors. When required, each Contractor is required to submit a site specific and/or JSA prior to the beginning of work. The RE and the Region Safety Risk Manager will review and accept the JSA prior to the work commencing in the event of the highly specialized nature of the Contractor(s) operational requirements.

7.2 Purpose and Scope

It is a project requirement that all employees conduct their individual operations in accordance with OSHA for all project operations. When any of the RE's Staff interact with Contractor operations, the site specific and JSA requirements must be followed as a more stringent requirement.

7.3 Specific Work Practice Control Procedures

For operations wherein the specific Contractor does not have set procedures, all Federal/State standards and rules as well as the UDOT Construction Safety and Health Manual shall be used as the basic guide to conduct specific operations. No pets allowed on UDOT construction sites except service animals, police and licensed security handler dogs.

7.4 Use of Handheld Electronic Devices

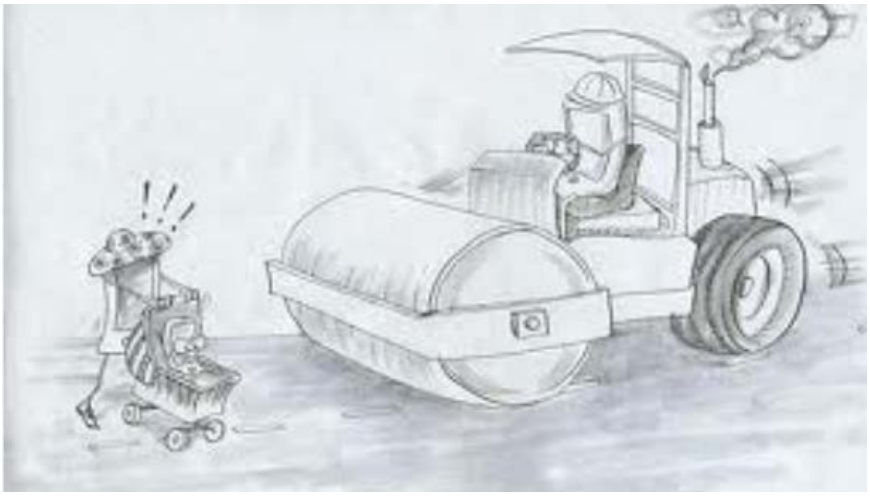

Project personnel and equipment operators must not engage in any practice or activity that distracts or diverts their attention while actually engaged in operating equipment or performing work activities. A person may not use a handheld communication device (cellular phone), portable media player (MP3 Players), or a portable computer for talking, text messaging, electronic mail communication, or other means of transferring information while working or being within the limits of a construction project under the jurisdiction of UDOT, except under the following conditions:

- The individual is designated as a member of the "emergency response" group for the project.

- Authorized personnel receive proper training on using handheld communication devices and are required to only use such a device once they are situated in a safe area.
- While confined in a vehicle and the vehicle is parked in a safe non-working area (Filling out paperwork on a laptop, managing a traffic control device via Bluetooth, etc.).
- Traffic control flagging operations (Two-way radio communication).
- Blind Crane Picks (The crane operator's visibility is restricted from viewing the assigned signal person. This process must follow OSHA 1926.1420(c)
- Surveying (Data may be transferred between surveying devices and computers in a controlled environment.)

7.5 Personal Protective Equipment Details

1. Hard hats

a. Hard hats **(ANSI Type I, Class E Approved)** must be warn at all times.

b. Any alteration of hard hats (such as painting, punching in holes, or cutting off brim) is not allowed. Company logos are permitted.

2. Eye and Face Protection

   a. 100% eye protection shall be worn at all times while on the project site. Face shields shall be worn in addition to safety glasses when the face is exposed to flying debris, i.e. using a disk grinder and chipping hammers, hand-held gasoline powered cut off saws and chain saws.

   b. Safety glasses shall be worn at all times and shall be free of defects and provided with side shields.

c. Regular sunglasses are not acceptable for eye protection.

3. Safety Harnesses and Lanyards

a. Safety Harness and anchored lanyard (Fall Arrest System) must be used by anyone working on elevated surfaces without standard Fall Protection. A full body harness is **REQUIRED** (see Fall Protection Section 7.8) when employees are exposed to unprotected falls.

b. Lanyards must be tied off to a member of substantial structure (5000 lbs) level to or above the worker. Lanyards must contain a shock absorber to reduce the force generated during a fall. **(See Section 7.8.4(f)) Only hooks with locking snap hooks that operate in "as new" condition will be used.**

c. Where other positive means of fall protection are not available, individuals must tie-off when working six feet or more above ground and lower levels, if an impalement hazard exists, tie-off is also required when less than six feet above ground and 100% tie-off is required if impalement hazards cannot be protected in accordance with OSHA regulations.

d. Daily routine inspections of belt/harness and lanyard by workers must be conducted prior to each use. The Contractor will conduct and document regular inspection (every three months) of all fall protection equipment. (Refer to Appendix H, Inspection Records)

e. Lanyards are to be used for their intended use only.

f. Damaged belts/harnesses and lanyards must be discarded.

4. Respiratory Protection

a. When respirators are required, OSHA requires a medical evaluation and respiratory training, including training in disposable fume/dust/mist mask use. Each Contractor will provide the required training and have a written respirator program, which will include fit testing, equipment selection, and physical examination, if required.

b. Care must be taken to ensure correct selection of respirator for the chemical/gas exposure. Monitoring of the exposure may be necessary to determine proper respirator requirements. Documentation of air monitoring test results will be maintained.

c. Reusable respirators must be sanitized on a daily basis. A Respirator Program must be established to ensure compliance. Proper storage is required.

d. Fresh airline hoods may be required for some operations, including but not limited to sandblasting operations. (Refer to Section 9.10).

5. Hearing Conservation

a. Suspected high noise areas (85 dba or higher) will be monitored by the Contractor with a sound level meter. The results of the test will be documented.

b. The Contractor is required to determine the noise levels in their work area. If these levels are found to exceed the Permissible Exposure Limits, a Noise Conservation Program must be implemented and warning signs must be posted. The Contractor will inform the RE of all audiometric test results and specific areas or equipment to be tested.

c. Hearing conservation protection will meet the exposure requirements; generally, a disposable insert is permissible for protective equipment. In extreme high noise areas, earmuff devices may be needed in addition to the disposable plugs.

d. Noise levels may be monitored in work areas on an as-needed basis by the appropriate RE's Staff Member to verify Contractor tests and determine noise level exposure for personnel in the area.

6. Lifelines

a. Independently secured lifelines or other ANSI approved methods will be used by all personnel working on two-point suspended scaffolds or float scaffolds.

b. Lifelines must be secured to a permanent part of the structure. Lifelines may not be attached to scaffold support members, unless secondary safety cables are used, per OSHA regulations.

c. All affected workers must have separate lifelines.

7. Minimum Clothing Requirements

a. Hard-sole leather work boots must be worn. Safety toed leather boots are recommended.

b. Hard hats are required on all UDOT construction projects by all contractor and owner personnel.

c. Shirts must at a minimum cover the stomach and shoulders. Tank tops are prohibited.

d. Pants must be full length.

e. Personnel should avoid wearing polyester in confined areas.

f. Excessively loose clothing should not be worn, this includes sweat pants.

g. Protective steel-toe shoes or boots must be worn when an operation poses a potential hazard to feet and are recommended at all times for all construction employees.

h. Safety glasses with side shields shall be required on UDOT projects at all times.

i. At a minimum, ANSI Class 2 outerwear is required when working within the UDOT right-of-way or within the limits of a construction project.

j. Welding or drilling operations require ANSI Class 2 outerwear. Employees performing these tasks should not wear flammable vests or loose fitting clothing.

7.5.1 Hand and Power Operated Tools

1. Portable tools having mushroomed heads, split or defective handles, worn parts, or other defects that impair strength or render them unsafe shall be removed from service **immediately.**

2. All power must pass through GFCI outlets.

3. Electric power portable tools shall not be hoisted or lowered by their cords.

   a. Blade guards on portable circular saws shall **NOT** be wedged or tied back in an open position.

   b. All portable power tools will be equipped with operable guards in accordance with the manufacturers recommendations. Removing a guard will result in the tools removal from site.

   c. Advisory comment on constant power control switches on power tools.

4. Pneumatic Power Tools.

    a. All hose connections, including those on the tools, shall be secured by wire or other approved methods, to prevent accidental disconnection. In addition, a whipcheck will be installed at each hose connection to prevent injuries from the whipping of a disconnected or broken hose.

    b. Manufacturers safe operating pressure for hoses, valves and fittings shall not be exceeded.
    c. Using a hose to hoist or lower the tools shall not be permitted. Hoses used on elevated platforms will be secured every 15 feet.

5. Hydraulic Power Tools

    a. The manufacturer's safe operation pressures shall not be exceeded. Tools not needed for the work shall not be left on scaffolds, ladders, or overhead levels. Positive means shall be used to prevent tools from falling.

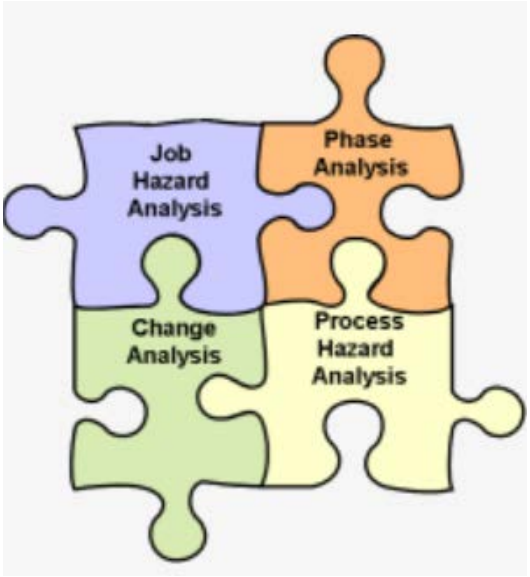

7.6 Job Safety Analysis (JSA)

7.6.1 Policy

In order to provide all RE Staff Members and Contractor employees with a safe workplace through preplanning hazardous work, a Job Safety Analysis (JSA) will be prepared. The Contractor Superintendent and/or the Contractor Safety Representative in charge of the operation will complete the written JSA. (See Appendix E, JSA forms)

7.6.2 Purpose

To develop a method by which the RE's Staff and Contractors can analyze the jobs they perform, and to identify the existing and potential hazards associated with each job step and establish controls for them. The JSA should be used as a task specific training tool to instruct employees, inspectors, and visitors of potential hazards and required safety precautions.

7.6.3 Responsibility

1. The supervisor (with assistance from safety personnel) shall be directly responsible for the work element and for developing and implementing the JSA.

2. The supervisor is responsible for reviewing the JSA with his/her crew and any other persons who may be exposed to the work and/or the hazards related to this work. All employees and other persons involved in the operation are responsible for signing a training log indicating that they understand and will comply with the provisions of the work task. (See Appendix F.)

7.6.4 General Requirements

1. All JSA's shall be reviewed and in place prior to commencing work activity and before any changes in the work cycle are made.

2. Log sheets and JSA's shall be placed in a conspicuous location at the workplace by supervision.

7.6.5 Implementation

1. Job Safety Analysis is required when a thorough pre-job planning, determines that the process, equipment or procedure indicates potential for serious injury and/or property damage. The following hazardous events are examples of when a JSA may be required:

   a. Potential for collapse, (work-in trenching, tunneling. This may include demolition, etc).

   b. Potential release of stored energy, (electrical, pressure, explosive, etc).

   c. Crane supported work plate form use.

   d. Critical crane lifts (two cranes used to lift one load).

   e. Unusual crane operation as defined by the RE.

   f. Potential exposure to uncontrolled hazardous materials or wastes.

   g. Blasting operations.

   h. Abrasive /sandblasting, hydro blasting, etc.

   i. Potential injury from burns, both chemical and thermal.

   j. Respirator use.

   k. Potential oxygen-deficient environments.

   l. Entry into confined space.

   m. Potential of entanglement in, on, or between objects.

   n. Work in public streets and highways.

   o. Lockout/Tagout.

   p. Roofing operations.

q. Operations involving fall exposure.

r. Structural steel erection.
s. Use of new or hazardous materials, procedures, and/or equipment.

t. Power actuated tool use.

u. Suspended scaffolds.

v. Scaffold erection.

w. Scaffold construction or dismantlement

x. Helicopter operations.

y. Asbestos related work or any other identified carcinogen exposure.

z. Rock drilling.

i. Work on live electrical systems.

2. Upon completion of JSA's, and prior to the start of work, the Contractor will conduct training for all personnel involved in the operation.

   The forms to be used for JSA's are shown in Appendix E and include:

   a. Key activities in the sequence in which they occur.

   b. The potential hazard(s) for each step.

   c. Specific effective safety measures to eliminate or control the hazard(s).

3. All JSA's shall be developed in sufficient detail to preclude confusion and misunderstanding.

4. Consideration shall be given to movement, work area, specific hazards, safety rules, and recognition of abnormal or unexpected problems.

7.6.6 JSA Documentation and Retention

1. A completed copy of the JSA must be available for review by the RE and the Contractor at the work location or the Project Office.

2. At the pre-construction conference the Contractor/Subcontractor will submit any site specific/JSA's to the RE.

3. A copy of the JSA will be retained in the project files.

7.7 Scaffolds and Work Platforms

7.7.1 Policy

All work platforms, either temporary or permanent, and scaffolds shall provide all employees a safe surface upon which to complete their work tasks. The Contractor/ Subcontractor is responsible for placing all work platforms and scaffolds used on the site and are responsible for their safety. The RE's staff or Contractor's personnel will not use any platforms or scaffolds they consider unsafe or that does not have a green, yellow or red tag attached. Job-made scaffolds must be designed and approved by an Engineer licensed in the State of Utah.

7.7.2 Purpose

Work platforms and scaffolds have a multitude of safety considerations that must be attended to, or an equipment failure with severe injuries might result from the lack of this attention. Additionally, falls from these types of work surfaces account for a large percentage of deaths and serious injuries. As required by OSHA, 100% fall protection will be provided during the erection and dismantling of scaffold systems greater than 6 feet in height. Equipment maintenance, installation and fall protection are key safety purposes of this procedure. Scaffolds will be erected, dismantled and appropriately tagged under the direct supervision of a competent person.

Scaffolds must provide clearance with high voltage electric lines as required in Table 1 Section 7.22. Screening may be required at work platforms where employees may contact high voltage lines with tools or materials.

7.7.3 Definitions

1. Tube and Coupler Scaffold: An elevated platform assembly consisting of tubing which serves as posts, bearers, braces, ties, and runners. A base supporting the posts and special couplers, which serves to connect the uprights, and to join the various members.

2. Tubular Welded Frame Scaffold: A sectional, panel or frame metal scaffold substantially built up of prefabricated welded sections which consist of posts and horizontal bearers with intermediate members. Panels or frames shall be braced with diagonal or cross braces.

3. Mobile Tubular Welded Scaffold: Tubular welded frame scaffolds mounted on heavy-duty castors having locks to preclude undesirable rolling.

4. Handrails: Horizontal pieces of pipe installed at a height of 42 to 45 inches above the working platform to protect personnel from failing. Handrails or mid-rails may not use double headed nails under any circumstances where the exposed ends may snag workers or their clothing.

5. Mid-Rails: Horizontal pieces of pipe installed knee high (approximately 21 inches) above the working platform to further protect personnel from falls.

6. Toe Boards: Horizontal 1-inch by 4-inch or wider boards mounted on edge to protect from tools rolling off the deck.

7. Planks: Wooden Planks 2-inch by 10-inch or wider used for scaffold decking at the working levels.

8. Ties and Bracing: Common construction wire used to tie scaffold to building etc. #12 wire may be used if doubled or a single looped #10 wire.

9. Cleats: Wooden "stops" attached to the bottom side of each end of the planks to prevent longitudinal movement of the planks.

10. Scaffold classification: Light duty scaffold should not exceed 25 psf, medium duty scaffold should not exceed 50 psf, and heavy-duty scaffold should not exceed 75 psf.

11. Leveling Devices: Scaffolds must use screw jack leveling devices at all ground contact points.

7.7.4 Responsibility

1. The Contractor employees intending to use the scaffold shall be responsible for assuring that the scaffold and all accessories comply with this standard before using the platform or scaffold. The scaffold will have a tag.

2. The employer will provide their supervisors with information related to compliance with regulations.

3. The Contractor must have a designated employee(s) knowledgeable of the scaffold requirements. Employees will be trained in assembling and disassembling the scaffolding. It is the responsibility of the "competent person" to ensure that the scaffolding is erected properly, inspected daily before each use, disassembled properly, and tagged accordingly.

4. The Contractor is responsible for Scaffold Permits and Engineered plans, when required.

5. Scaffold tagging (Green, Yellow or Red):

   A tag will be placed on a scaffold approved by the “competent person”. This tag must identify the status of the scaffold by using one of three tags:

A GREEN tag indicates that the scaffold is safe for its intended use. This tag must provide the following:

a. Location of scaffold
b. Date of inspection
c. Name of Inspector

A YELLOW tag indicates the scaffold was constructed in a manner outside of norm in order to meet specific working conditions or requirements. This tag shall contain SPECIAL INSTRUCTIONS to be read and followed by the user. This tag must provide the following:

a. Location of Scaffold
b. Date of Inspection
c. Name of Inspector
d. Brief description of the condition
e. Preventative measures to diminish the risk

A RED tag indicates that the scaffold is unfit for use. This tag must provide the following:

a. Location of scaffold
b. Date of inspection
c. Name of inspector
d. The date tag was placed.
e. The name of person inspecting
f. A brief description of condition and/or special instruction

7.7.5 Implementation

1. Inspection Tips

The following listed items are presented to provide employees a guide for inspection of the platforms and scaffolding before usage. When any contractor employee observes any item listed below, the person must notify his/her supervisor and not use the platforms or scaffolds before any deficiency is corrected.

a. Step back and visually inspect a scaffold before each use.

b. Inspect all equipment components before using. Never use equipment that is damaged or deteriorated in anyway. Damage or deteriorated equipment must be red-tagged.

c. Avoid using rusted equipment, as its strength is not known.

d. Inspect ground surface of proposed scaffold location for soil stability, levelness, obstructions, and electrical hazards. Screw jacks and mudsills must be used.

e. Inspect all wood components for grade and strength any defective planks must be removed and tagged or marked - DO NOT USE.

Note: A plank with a full thickness, longitudinal crack 18" or greater will be removed from use.

f. Inspect erected scaffolds regularly and before use to be sure they are maintained in a safe condition and that the base plates and mudsills have not settled. Inspections must be completed daily by the competent person and signed off before put into use.

2. General Requirements

a. Review equipment for adequate mudsills for scaffold posts to distribute the load as required.

b. Incomplete scaffolds will be RED tagged by the responsible Contractor. The DANGER tag should provide hazard warnings. A YELLOW tag will identify PPE and other special instructions required in order to use the scaffold. Contractor employees and RE will be instructed to read tags before using scaffolds. If a tag is not attached to the scaffold DO NOT USE the scaffold.

c. Stationary metal scaffold legs shall rest upon manufacturer's adjustable steel base plates, mudsills are required when resting on earth to assure the safety factor of four is maintained. Screw jack base plates must always be used.

d. Use adjusting screw jacks instead of blocking to adjust to uneven conditions.

e. Plumb and level all scaffolds as the erection proceeds. Do not force braces to fit. Level the scaffold until proper fit can be made easily.

f. Fasten all braces securely with manufacturer's securing pins only.

g. On wall scaffolds, place and maintain anchors securely between structures and scaffold at least every 20 feet of horizontal length and every 20 feet of vertical height.

h. If scaffolds are to be partially or fully enclosed, specific precautions must be taken to assure frequency and adequacy of ties securing the scaffolding due to the increased load conditions resulting from the effects of wind, snow, and ice. An Engineer must verify the potential wind loading capability of scaffolds.

i. Free-standing scaffold towers must be restrained from tipping by guying or other means if it is higher than three times the least base dimension.

j. All appropriate horizontal and diagonal braces must be installed before the scaffold can be used for work or inspection.

k. Equip all planked or staged areas with guardrails 42 inches to 45 inches high, mid-rail approximately 21 inches high, and toe boards 4 inches in height along all open sides and ends of the scaffold platforms. The maximum deflection of the top rail when a load of 200 pounds is applied in any direction at any point on the top rail shall not exceed 3 inches.

l. Scaffolds must be equipped with a scaffold ladder or equivalent safe means of access. Use landing platforms with all access ladders higher than 30 feet. Offset the ladder location at each landing. Single or double cleat ladders shall not exceed 30 feet in length. Climbing devices or other means of fall protection is required for any ladder over 24 feet.

m. Take appropriate precautions to avoid power lines and electrical conductors.

n. All planking shall be scaffold grade as recognized by grading rules for the species of wood used. The maximum permissible span for 1-1/4-inch by 9-inch or wider planks of full thickness is 4 feet with medium loading of 50 pounds per square foot. The maximum permissible spans for 2-inch by 9-inch or wider planks shall conform to Attachment 3-12.

o. Platform planks shall be laid with their edges close together so the platform will be tight, with no spaces through which tools or parts can fall. All scaffold platforms shall be at least two planks wide. Laminated planking (plywood) of equivalent strength of scaffold grade planking may be placed over planks to eliminate spaces created when the platform is built around piping or other obstructions.

p. Where planking is lapped, each plank shall lap its support at least 12 inches and be secured from movement with #9 wire or equivalent.

q. Scaffold planks shall extend over their end supports not less than 6 inches or more than 12 inches and shall have cleats or be otherwise secured.

r. All scaffolding accessories shall be used and installed in accordance with manufacturer's recommended procedures. Scaffolds, frames, and their components manufactured by different companies shall not be intermixed.

s. Where persons are required to work or pass under the scaffold, scaffolds shall be provided with a screen between the toe board and the guardrail extending along the entire opening consisting of #18 gauge U.S. standard wire 2-inch mesh or the equivalent.

3. Mobile Scaffolds

a. The height of rolling scaffolds must be equal to or less than three times the minimum base dimension. Outriggers may be installed to increase the minimum base dimensions.

b. Locking devices must be installed on casters and locked prior to personnel using the scaffold. At least two of the casters shall be swivel type.

c. Tools and material shall be removed or secured prior to moving the scaffold tower. Personnel must not be on the scaffold while the scaffold is being moved.

d. A dedicated spotter must be used if tower could potentially be moved within 10 feet of any overhead power lines.

4. Instruction of Personnel

All personnel should be knowledgeable in the proper and safe use of work platforms or scaffolding. Instruction will include, but not be limited to the following guidelines:

a. Follow instruction on scaffold tag.

b. Do not climb on scaffold bracing unless it is designed and documented by the manufacturer for this purpose.

c. Do not use ladders, buckets or other makeshift devices on top of scaffolds to increase the height.

e. Do not move rolling scaffolds with people or loose materials on them, unless conditions comply with those outlined by the manufacturer and OSHA.

f. Keep your weight inside the scaffold tower while working.

g. Do not carry tools or parts in your hands or pockets when ascending the access ladder. Utilize tool belts, tool bucket, and rope or other acceptable means to raise and lower such items.

h. Do not throw any scrap materials down from elevated locations. Lower objects with rope or use other acceptable means.

i. Scaffolds shall not be used for storage of material, except material currently being used.

j. Do not overload scaffolds. (Refer to 7.6.4, J)

k. Ladders or equivalent safe access shall be provided for employee entry onto the scaffold deck level.

5. Work Platforms

a. Temporary and permanent platforms shall be equipped with standard protective rails and toe boards when the floor of the platform exceeds 6 feet.

b. If because of the confined work location protective rails cannot be installed, an employee may use a fall arrest system, independently secured to a building or structure, free of the platform and/or platform support devices, if approved by the competent person and indicated on the YELLOW scaffold tag.

c. Platforms must be securely installed and not overloaded. Platforms will be kept clear of tripping and slipping hazards. All hoses and cords shall be secured every 15 feet.

d. Contractor/Subcontractor "Competent Person(s)" must review the completed platform installation prior to use and place the appropriate tag.

e. When installing a platform the operational task must be considered to make sure correct support devices are used, i.e., wire cable supports instead of hemp rope for a welding/cutting operation.

7.8 Walking and Working Surfaces

7.8.1 Policy

All work areas on the project shall have walking and working surfaces free of conditions that pose tripping and/or falling hazards.

7.8.2 Purpose

Falls are the number one contributor to construction workers' serious and fatal injuries. The Contractors will consider maintenance of project walking and working surfaces a pivotal part of their safety and health program. If Contractor employee observes any conditions on a walking or working surface that poses a tripping and/or falling hazard, he/she will notify his/her supervisor. The Contractor is responsible for their worksite safety. When a walking or working surface deficiency is observed, the responsible Contractor will immediately correct the deficiency. A scaffold will be **"Red Tagged"** until corrected.

7.8.3 Scope

The safety requirements listed within this section pertain to construction activities only and are not to be used as design criteria for permanent structures. They cover construction work area

conditions where there is danger of personnel or materials falling through floor, roof or wall openings, or from stairways or runways.

7.8.4 Implementation

1. Standard Specifications

   If guardrail or protective covers are required for tripping and falling hazards these devices shall be installed in accordance with the specifications below.

   a. Standard Protective Railings

      A standard railing shall consist of top rail, intermediate rail, toe board, and posts, and shall have a vertical height of approximately 42 inches to 45 inches from upper surface of top rail to floor, platform runway or ramp level. The top rail shall be smooth-surfaced throughout the length of the railing. The intermediate rail shall be halfway between the top rail and the floor, platform, runway, or ramp. The ends of the rail shall not overhang the terminal posts except where such overhang does not constitute a projection hazard. Minimum requirements for standard railing under various types of construction are specified in the following paragraphs:

      b. For wood railings, the posts shall be of at least 2-inch by 4-inch stock spaced not to exceed 8 feet; the top rail shall be of at least 2-inch by 4-inch stock; the intermediate rail shall be of at least 1-inch by 6-inch stock.

      c. For pipe railings, posts and top intermediate railings shall be at least 1-1/2 inches nominal diameter with posts spaced not more than 8 feet on centers.

      d. For structural steel railings, posts and intermediate railings shall be at least 1-1/2 inches nominal diameter with posts spaced not more than 8 feet on centers.

      e. The anchoring of posts and framing of members for railings of all types shall be of such construction that the completed structure shall be capable of withstanding a load of at least 200 pounds applied in any direction at any point on the top rail, with a minimum of deflection.

      f. Railings receiving heavy stresses from employees' trucking or handling materials shall be provided with additional strength by the use of heavier stock, closer spacing of posts, bracing, or by other means.

      g. Other types, sizes, and arrangements of railing construction are acceptable, provided they meet the following conditions:

- A smooth-surfaced top rail at a height above floor, platform, runway, or ramp level of 42 inches to 45 inches.

- Strength to withstand at least the minimum requirements of 200 pounds top rail pressure with a minimum of deflection.

- Protection between top rail and floor, platform, runway, ramp, or stair treads, equivalent at least to that afforded by a standard intermediate rail.

h. Half-inch wire rope shall be considered as meeting project requirements when installed to protect against the hazards of open-sided floors with the following additional requirements.

Note: Wire rope railing shall not be used as part of a fall arrest system unless so designed).

- Cable must be maintained with a minimum deflection (three inches or less) through the use of turnbuckles or other equally effective device.

- Cable shall be supported on eight-foot centers where maintenance of the minimum deflection requirements is not possible. Cable must still have three inches or less deflection.

- On five-foot centers, highly visible flagging such as surveyors tape shall be used to increase visibility of the cable.
- * The cable shall be two-inch. Half-inch cable should be the standard due to the larger diameter affording a larger gripping surface to the hand.

- Three clamps will be used at all connections. Proper installation of these clamps is required. ("Never saddle a dead horse")

i. Stair Railings

A stair railing shall be of construction similar to a standard railing, but the vertical height shall be not more than 34 inches nor less than 30 inches from upper surface of top rail to surface of tread in line with face of riser at forward edge of tread.

j. Standard Toe boards

- A standard toe board shall be 4 inches minimum in vertical height from its top edge to the level of the floor, platform, runway, or ramp. It shall be securely fastened in place and have not more than 1/4-inch clearance above floor level. It may be made of any substantial material, either solid or with openings not over 1 inch in greatest dimension.

- Where material is piled to such height that a standard toe board does not provide protection, paneling or screening from edge of standard toe board to intermediate rail or to top rail shall be provided.

k. Standard Handrails

- A standard handrail shall be of construction similar to a standard railing except that it is mounted on a wall or partition, and does not include an intermediate rail. It shall have a smooth surface along the top and both sides of the handrail. The handrail shall have an adequate handhold for anyone grasping it to avoid falling.

  Duplex nails shall not be used and the ends of the handrail shall be constructed so as not to constitute a projection hazard.

- The height of handrails shall be not more than 34 inches nor less than 30 inches from upper surface of handrail to surface of tread, in line with face of riser or to surface ramp.

- All handrails and railings shall be provided with a clearance of approximately 3 inches between the handrail or railing and any other object.

l. Floor Opening Covers

Floor opening covers shall be of any material that meets the following strength requirements:

- Conduits, trenches, and manhole covers and their supports, when located in roadways and vehicular aisles, shall be designed to carry a truck rear-axle load of at least two times the maximum intended load.

- The floor opening cover shall be capable of supporting the maximum intended load and so installed as to prevent accidental displacement.

- All floor-opening covers will be properly marked and secured.

m. Skylight Openings

- Skylight openings that create a falling hazard shall be either guarded with a standard railing or covered.

n. Wall Opening Protection

- Barriers shall be of such construction and mounting that, when in place at the opening, the barrier is capable of withstanding a load of at least 200 pounds applied in any direction (except upward), with a minimum of deflection at any point on the top rail or corresponding member.

- Screens shall be of such construction and mounting that they are capable of withstanding a load of at least 200 pounds applied horizontally at any point on the near side of the screen. They may be of solid construction, of grillwork with openings not more than 8 inches long, or of slat work with openings not more than 4 inches wide with length unrestricted.

2. Flooring Requirements

a. Permanent Flooring

The permanent floors shall be installed as the erection of structural members progresses, and there shall be not more than eight stories between the erection floor and the uppermost permanent floor, except where the structural integrity is maintained as a result of the design.

b. Temporary Flooring

- The derrick or erection floor shall be solidly planked or decked over its entire surface except for access openings. Planking or decking of equivalent strength shall be of proper thickness to carry the working load. Planking shall be not less than 2 inches thick, full-size and undressed, and shall be laid tight and secured to prevent movement.

- On buildings or structures not adaptable to temporary floors, and where scaffolds are not used, safety nets shall be installed and maintained whenever the potential fall distance exceeds two stories or 25 feet. The nets shall be hung with sufficient clearance to prevent contacts with surface of structures below.

- Floor periphery - safety railing. A safety railing of 2-inch wire rope or equal shall be installed approximately 42 inches high around the periphery of all temporary planked or temporary metal-decked floors of tier buildings and other multi-floored structures during structural steel assembly. On each floor, immediately after structural steel assembly, an intermediate railing must be installed, with toe boards where needed.

- Where steel erection is being done, a tightly planked and substantial floor must be maintained within two stories or 30 feet, whichever is less, below and directly under that portion of each tier of beams on which any work is being performed, except

when gathering and stacking temporary floor planks on a lower floor, in preparation for transferring such planks for use on an upper floor. Where such a floor is not practicable, subsection 2 of this section applies.

- When gathering and stacking temporary floor planks, the planks must be removed successively, working toward the last panel of the temporary floor so that the work is always done from the planked floor.

- When gathering and stacking temporary floor planks from the last panel, the employees assigned to such work shall be protected by a full body harness with safety lines attached to a substantial anchorage.

c. Flooring - Other Construction

- In the erection of a building having double wood floor construction, the rough flooring shall be completed as the building progresses, including the tier below the one on which floor joists are being installed.

- For single wood floor or other flooring systems, the floor immediately below the story where the floor joists are being installed shall be kept planked or decked over.

3. Guarding of Floor Openings and Floor Holes

a. Floor openings shall be guarded by standard railings with standard toe boards or cover, as specified in subpart A of this section. In general, a railing shall be provided on all exposed sides, except at entrances to stairways.

b. Ladder-way floor openings or platforms shall be guarded by standard railings with standard toe boards on all exposed sides, except at entrance to opening, with the passage through the railing either provided with a swinging gate or so offset that a person cannot walk directly into the opening.

c. Hatchways and chute floor openings shall be guarded by one of the following:

- Hinged covers of standard strength and construction and a standard railing with only one exposed side. When the opening is not in use, the cover shall be closed or the exposed side shall be guarded at both top and intermediate positions by removable standard railings.

- A removable standard railing with toe board or not more than two sides of the opening and fixed standard railings with toe boards on all other exposed sides. The removable railing shall be kept in place when the opening is not in use and should preferably be hinged or otherwise mounted so as to be conveniently replaceable.

d. Wherever there is danger of falling through a skylight opening, it shall be guarded by a fixed standard railing on all exposed sides or a cover capable of sustaining a load of at least 200 lbs applied in any direction, with a minimum of deflection.

e. Pits and trap-door floor openings shall be guarded by floor opening covers of standard strength and construction. While the cover is not in place, the pit or trap openings shall be protected on all exposed sides by removable standard railings.

f. Manhole floor openings shall be guarded by standard covers, which need not be hinged in place. While the cover is not in place, standard railings shall protect the manhole opening.

g. Temporary floor openings shall have standard railings or covers installed.

h. Floor holes, into which persons can accidentally walk, shall be guarded by either a standard railing with standard toe board on all exposed sides, or a floor hole cover of standard strength and construction that is secured against accidental displacement. While the cover is not in place, a standard railing shall protect the floor hole.

i. Where doors or gates open directly on a stairway, a platform shall be provided, and the swing of the door shall not reduce the effective width of the platform to less than 20 inches.

4. Guarding of Wall Openings

a. Wall openings, from which there is a drop of more than 4 feet, and whose bottom is less than 3 feet above the working surface, shall be guarded as follows:

- When the height and placement of the opening in relation to the working surface is such that either a standard rail or intermediate rail will effectively reduce the danger of falling, one or both shall be provided.

- A standard toe board or an enclosing screen solid construction shall protect the bottom of a wall opening, which is less than 4 inches above the working surface, regardless of width.

b. An extension platform outside a wall opening onto which materials can be hoisted shall have side rails or equivalent guards of standard specifications. One side of an extension platform may have removable railings in order to facilitate handling materials.

c. When a chute is attached to an opening, the provisions of paragraph 1, Subpart D shall apply, except that a toe board is not required.

5. Guarding of Open-sided Floors, Platforms and Runways

a. Every open-sided floor or platform 6 feet or more above adjacent floor or ground level shall be guarded by a standard railing or the equivalent on all open sides, except where there is an entrance to a ramp, stairway, or fixed ladder. The railing shall be provided with a standard toe board to facilitate the passage of persons beneath the open sides or

wherever there is moving machinery, or equipment producing hazardous falling materials.

b. Runways shall be guarded by standard railings or the equivalent on all sides 4 feet or more above floor or ground level. Wherever, tools, machine parts, or materials are likely to be used on runways, toe boards shall also be provided on all exposed sides.

c. Where any person entering upon runways becomes exposed to machinery, electrical equipment, or other danger from a falling hazard, additional guarding shall be provided by the Contractor. Engineer's Team Members are to notify their supervisor of the need for the additional guards.

d. Regardless of height, open-sided floors, walkways, platforms, or runways above or adjacent to dangerous equipment, such as, pickling or galvanizing tanks, degreasing units, and similar hazards, shall be guarded with standard railings and toe boards.

6. Stairway Railings and Guards

Every flight of stairs having four or more risers shall be equipped with standard stair railings or standard handrails as specified below, the width of the stair to be measured clear of all obstructions except handrails:

a. On stairways less than 44 inches wide having both sides enclosed and at least one handrail.

b. On stairways less than 44 inches wide having one side open, at least one stair railing and on the intermediate stair railing located approximately midway on the open side.

c. On stairways 88 or more inches wide, one handrail on each enclosed side, one stair railing on each open side, and one intermediate stair railing located approximately midway.

7. Stairways

On all structures of two or more floors (20 feet or more) in height, stairways, ladders or ramps must be provided for employees during the construction periods. Stairways must meet the following requirements:

a. Rise height and tread width must be uniform throughout any flight of stairs including any foundation structures used as one or more treads of the stairs.

b. Temporary stairs must have a landing not less than 30 inches in the direction of travel at every 12 feet of vertical rise.

c. Permanent steel or other metal stairways and landings with hollow pan-type treads that are to be filled with concrete or other materials when used during construction must be

filled to the level of the nosing with solid material. The requirement shall not apply during the period of actual construction of the stairways themselves.

d. Metal landings must be secured in place before filling.

e. Wooden treads for temporary service must be full width.

f. All parts of stairways must be free of hazardous projections, such as protruding nails.

g. Stairway railings and guardrail must meet the requirement of subpart F of this section.
f. All stairs shall have minimum illumination intensities of 5 foot-candles.

g. Debris and other loose materials shall not be allowed on, under, or at approaches and landings to stairways.

h. Slippery conditions on stairways shall be eliminated as soon as possible after they occur.

i. Spiral stairways shall not be permitted except for special limited usage and secondary access situations where it is not practical to provide a conventional stairway.

8. Barrier Identification Tape

Barrier identification tape is strictly prohibited from being used for any form of personnel fall protection. Barricade tape around excavation can be used for short term (24 hours), after this period physical barriers are required.

a. YELLOW barricade tape shall be used for CAUTION/WARNING

b. RED barricade tape shall be used for DANGER DO NOT ENTER

Note: Once the area barricaded is free of the hazard(s) for which it was erected the tape will be removed and properly discarded.

7.9 Fall Protection

7.9.1 Policy

The RE and Contractor employees shall not be exposed to fall hazards. When an employee observes a fall hazard, he/she will notify his/her supervisor of the hazard. The responsible Contractor will immediately correct the hazard. The UDOT fall protection standard is understood to be at 6 feet for all crafts and for any activity where a fall of six feet or more is possible.

7.9.2 Purpose

The purpose of this section is to minimize the risk of injury to site personnel from fall hazards.

7.9.3 Responsibility

Each Contractor is responsible for meeting fall protection requirements in their overall safety and health program.

Each Contractor is required to evaluate **ALL** fall exposure conditions or tasks and must develop a **Comprehensive Fall Protection Program**, which outlines what methods; procedures and/or devices will be used in their program. This program will suffice for a JSA... in most cases. This evaluation and program must be in writing and must be submitted to the RE PRIOR to employee exposure. Any Contractor failing to prepare this evaluation and program will be considered to be in non-compliance and the RE will take appropriate action.

Note: Full body harnesses are the only acceptable personal protective devices for employees exposed to a fall condition as approved for use in a Fall Arrest System.

7.9.4 Implementation

Each Contractor is responsible for implementing the requirements to achieve fall protection in accordance with all Federal, State, local rules, regulations, and **The UDOT Construction Safety and Health Manual.**

1. Approved fall protection equipment or devices shall be used by all employees working where there is a danger of falling. Fall protection systems must be designed and installed according to manufacturer requirements. Fall protection is required, as a minimum, under the following examples:

    a. Formwork and reinforcing steel. Personal Fall Arrest Systems, safety net systems, or positioning device systems shall protect each employee on the face of formwork or reinforcing steel from falling 6 feet or more to lower levels. This requires continuous fall protection (this means while moving and working) unless documentation from OSHA has been obtained and submitted to the RE.

    b. When working from a telescopic, articulating, or rotating type man lifts, personnel must always wear a full body harness, secured to an approved anchorage point located in the lift.

    c. When working on a ladder higher than 6 feet from a solid surface, if the employee's torso extends past the side rails or if a vertical ladder extended a total of 20' or greater.

d. When working on a platform or other support not equipped with adequate guardrail, which is higher than 6 feet from a solid surface. In some cases guardrail or other means of fall protection may be required at 4 feet.
e. When working from a crane-suspended work platform, a body harness is mandatory.

f. When an employee needs to be lowered into or raised from a confined space, a body harness will be worn. The employee will be supported by an approved platform or a boatswain's chair, with certified hoisting device and fall arrest device.

g. When working adjacent to an unguarded floor opening or sloped roof, a lifeline system is desirable for mobility. A positive means of fall protection must be provided unless it can be proven infeasible.

2. Employees will be instructed on the proper wearing and use of personal Fall Protection Arresting Device Systems.

3. A static lifeline is a horizontal line attached between at least two fixed anchorages, independent of the work surface, to which a lanyard is secured. A lifeline must be constructed of wire rope (cable), at least 1/2 inch in diameter. It must be capable of supporting a dead weight of 5000 lbs. at its center for each person utilizing the lifeline.

4. A lanyard is a maximum 6-foot-long piece of flexible line rated for 5000 pounds used to secure the wearer of an approved safety belt or harness to a lifeline or fixed anchorage. Shock absorbing lanyards are a simple means to reduce the force of a fall. Note: the body force limits must be considered when selecting personal fall arrest devices.

5. A major problem with lanyard snap hooks is the possibility of "Rollout" or unlatching during shock or static loading by a twisting action. Locking snap lanyard hooks or similar design hooks such as carabineer type snap hooks with automatic twist lock arm or other locking device are required on all safety lanyards, including those used as part of a Positioning Device System in reinforcing steel placement. **Only hooks with locking snaps that operate in as-new condition will be used**. Continued workers education is necessary. Users should not rely on sound of a snap closing; they should check the connection visually. Regular maintenance checks are required.

6. Wire rope must not be used for lanyards, unless a shock-absorbing device, such as a "Dyna-Brake," is used in the system. Without such a device, the rigidity of the cable greatly increases the effect of the impact load in the event of a fall and exceeds the OSHA 1800-pound maximum body-loading standard.

7. Knots shall not be made in rope lanyards as strength is greatly reduced by knots.

8. Lanyards shall not be lengthened by connecting two snap hooks together as the possibility of a "roll-out" exists and this may exceed design limitations.

9. Supervisors shall ensure that employees before each use perform equipment inspections. Harnesses and lanyards that have been subjected to impact loading shall be removed from service by the responsible Contractor and be destroyed to eliminate the possibility of using them at a later date.

10. To maintain their service life, harnesses and lanyards shall be inspected frequently by the Contractor (Competent Person). At minimum a written quarterly inspection will be conducted (see Appendix H). Regular inspection for wear, damage or corrosion shall be a daily requirement and the personal protective equipment (PPE) shall be discarded by the Contractor if excessive wear is determined. The following recommended the responsible Contractor shall administer inspection and maintenance procedures:

FULL BODY HARNESS INSPECTION

For harness inspection, perform the following procedures for all harness straps. .

Belts and rings
Beginning at one end, holding the body side of the belt toward you, grasp the belt with your hands 6 to 8 inches apart. Bend the belt in an inverted "U" as shown. The resulting surface tension makes damaged fibers or cuts easier to see. Follow this procedure the entire length of the belt or harness. Watch for frayed edges, broken fibers, pulled stitches, cuts or chemical damage.

Dee Rings
Check dee rings and dee metal wear pad (if any) for distortion, cracks, breaks, and rough or sharp edges. The dee ring bar should be at a 90° angle with the long axis of the belt and should pivot freely.

Buckles
Attachments of buckles and dee rings should be given special attention. Note any unusual wear, frayed or cut fibers, or distortion of the buckles or dee rings. Rivets should be tight and unmovable with fingers. Body side rivet base and outside rivet burr should be flat against the material. Bent rivets will fail under stress.

Inspect for Frayed or Broken Strands
Broken webbing strands generally appear as tufts on the webbing surface. Any broken, cut or burned stitches will be readily seen.

Tongue or Billet
The Tongue or billet of the belts receives heavy wear from repeated buckling and unbuckling. Inspect for loose, distorted or broken grommets. Belts should not have additional, punched holes.

Tongue Buckle
Buckle tongues should be free of distortion in shape and motion. They should overlap the buckle frame and move freely back and forth in their socket. Roller should turn freely on frame. Check for distortion or sharp edges.

Friction Buckle
Inspect the buckle for distortion. The outer bars and center bars must be straight. Pay special attention to corners and attachment points of the center bar.

LANYARD INSPECTION

When inspecting lanyards, begin at one end and work to the opposite end. Slowly rotate the lanyard so that the entire circumference is checked. Spliced ends require particular attention. Hardware should be examined under procedures also detailed below, i.e., snaps, dee ring and thimbles.

Hardware

Snaps
Inspect closely for hook and eye distortions, cracks, corrosion, or pitted surfaces. The keeper (latch) should seat into the nose without binding and should not be distorted or obstructed. The keeper spring should exert sufficient force to firmly close the keeper. Keeper locks must prevent the keeper from opening when the keeper closes.

Thimbles
The thimble must be firmly seated in the eye of the splice, and the splice should have no loose or cut strands. The edges of the thimble must be free of sharp edges, distortion, or cracks.

Steel Lanyard
While rotating the steel lanyard watch for cuts, frayed areas, or unusual wearing patterns on the wire. Broken strands will separate from the body of the lanyard.

Web Lanyard

While bending webbing over a pipe or mandrel, observe each side of the webbed lanyard. This will reveal any cuts or breaks. Swelling, discoloration, cracks, charring are obvious signs of chemical or heat damage. Observe, closely for any breaks in the stitching.

Rope Lanyard
Rotation of the rope lanyard while inspecting from end-to-end will bring to light any fuzzy, worn, broken or cut fibers. Weakened areas from extreme loads will appear as a noticeable change in original diameter. The rope diameter should be uniform throughout, following a short break-in-period.

"Sofstops" or "Dyna-Brake" Shock Absorbing Device
The outer portion of the pack should be examined for burn holes-and tears. Stitching on areas where the pack is sewn to dee rings, belts, or lanyards should be examined for loose strands, rips, and deterioration.

The Contractor is required to complete a quarterly Safety Belt, Lanyard and Harness Inspection record and provide documentation to the RE. An example of a Safety Belt, Lanyard and Harness Inspection Record is enclosed in Appendix F.

VISUAL INDICATIONS OF DAMAGE TO WEBBING AND LANYARDS

Type of Webbing	Heat	Chemical	Molten Metal or Flame	Paint and Solvents
Nylon & Cordura	In excessive heat, nylon becomes brittle and has a shriveled brownish appearance. Fibers will break when flexed. Should not be used above 200 degrees F.	Change in color usually appearing as a brownish smear or smudge. Transverse cracks when belt is bent over mandrel. Loss of elasticity in belt.	Webbing strands fuse together. Hard shiny spots. Hard and brittle feel. Will not support combustion.	Paint, which penetrates and dries, restricts movement of fibers. Drying agents and solvents in some paints will appear as chemical damage.
Polyester	Same as nylon, except do not use above 180 degree F.	Same as nylon.	Same as nylon, except will support combustion.	Same as nylon.

NOTE: Lanyards made of nylon rope will show the same visual indications of damage as nylon webbing. Likewise, lanyards made of polyester rope will show the same visual indications as polyester webbing.

CLEANING
Basic care of all safety equipment will prolong the durable life of the unit and will contribute toward the performance of its vital safety function. Proper storage and maintenance after use are as important as cleansing the equipment of dirt, corrosives, or contaminants. Storage areas should be clean, dry and free of exposure to fumes or corrosive elements.

a. Nylon and Polyester - Wipe off all surface dirt with a sponge dampened in plain water. Squeeze the sponge dry. Dip the sponge in a mild solution of water and commercial soap or detergent. Work up a thick lather, with a vigorous back and forth motion. Then wipe the belt dry with a clean cloth. Hang freely to dry, but away from excessive heat.

b. Drying - Belts and other equipment should dry thoroughly without close exposure to heat, steam, or long periods of sunlight.

System Components - Only components that are fully compatible with one another should be used. Fall arrest systems are designed and tested as complete systems and should be used in this way.

What To Do After a Fall - If a fall occurs, all components of the fall arrest system should be discarded. A fall substantially decreases the strength of all parts of the system; so all components should be replaced after a fall.

11. Safety nets may be used as another form of protection from fall injuries.

    a. Safety nets will be used whenever the use of safety belts and lifelines is impractical or unfeasible and protection from falls is required.

    b. Where safety nets are used, extra care must be taken to arrange the nets so sufficient clearance exists to prevent the nets from contact with the ground or other surfaces below or the sides when the nets catch the anticipated impact load.

    c. When more than one net is joined to form a larger net, they should be laced or otherwise secured so they perform properly. For all nets, perimeter suspension should be designed and installed in such a manner that the suspension points are either level or slope toward the building or structure so a rebounding load will not be directed out of the netting. Perimeter nets should not be more than 25 feet below the working level.

    d. Daily inspection of nets is required. Inspections shall be made prior to and after installation, after any alterations and after impact loading.

7.9.5 Training Requirements

1. The Contractor shall prepare a written training program to ensure that each employee who **might** be exposed to a fall hazards is knowledgeable of the **Fall Protection Program** requirements. The program shall enable each employee the ability to recognize the hazards of falling and shall train each employee in the procedures to be followed in order to eliminate or minimize these hazards.

2. The Contractor shall assure that each employee has been trained, as necessary, by a **Competent Person** (the name of the Competent Person must be submitted to the RE) qualified in the following areas:

    a. Working knowledge of all Federal, State, Local and **The Project** Fall Protection Regulations.

    b. The nature of fall hazards in the work area.

    c. The correct procedures for erecting, maintaining, disassembling, and inspecting the fall protection systems to be used.

    d. The use and operation of guardrail systems, personal fall arrest systems, safety net systems, warning line systems, safety monitoring systems, controlled access zones, and other protection to be used.

e. The role of each employee in the safety monitoring system when this system is used; (Note: to use this system the contractor must prove, in writing that it is not feasible or it is more hazardous to use other methods of Fall Protection.)

f. The limitations on the use of mechanical equipment during the performance of roofing work on low-sloped roofs.

7.9.6 Certification of Training

The Contractor shall verify compliance with paragraph 1 and 2 (above), by preparing a written certification record, which shall contain:

1. The name of the employee trained.

2. The date of the training

3. The signature of the person who conducted the training and the employer.

   The latest training certification shall be maintained at the job site and available for review by the RE.

7.9.7 Retraining

When the Contractor or RE has reason to believe that any affected employee who has already been trained does not have the understanding and skill required by this manual, the employer shall retrain each such employee. Circumstances where retraining is required include, but are not limited to, situation where:

1. Changes in the workplace render previous training obsolete; or

2. Changes in the type of fall protection systems or equipment to be used render previous training obsolete; or

3. Inadequacies in an affected employee's knowledge or use of fall protection systems or equipment indicate that the employee has not retained the requisite understanding or skill. Retraining and documentation of the retraining will be required for any person prior to further exposure. If further fall protection violations are observed upon completion of the retraining disciplinary actions shall be imposed up to and including permanent removal from the project.

These records must be maintained at the job site and available for review by the RE.

7.9.8 Definitions

1. Anchorage means a secure point of attachment for lifelines, lanyards or deceleration devices capable of 5000 lbs. of force in a full arrest situation and 3000 lbs. when used as a part of an approved positioning system per employee.

2. Connector means a device used to couple (connect) parts of the personal fall arrest system and positioning device system together. It may be an independent component of the system, such as a carabineer, or it may be an integral component of part of the system (such as a buckle or dee-ring sewn into a body belt or body harness, or a snap-hook spliced or sewn to a lanyard or self-retracting lanyard).

3. Controlled access zone (CAZ) means an area in which certain work (e.g., overhand bricklaying) may take place without the use of guardrail systems, personal fall arrest systems, or safety net systems and access to the zone is controlled.

4. Deceleration device means any mechanism, such as a rope grab, rip-stitch lanyard, specially-woven lanyard, tearing or deforming lanyards, automatic self-retracting lifelines/lanyards, etc., which serves to dissipate a substantial amount of energy during a fall arrest, or otherwise limit the energy imposed on an employee during fall arrest.

5. Deceleration distance means the additional vertical distance a falling employee travels, excluding lifeline elongation and free fall distance, before stopping, from the point at which the deceleration device begins to operate. It is measured as the distance between the location of an employee's body belt or body harness attachment point at the moment of activation (at the onset of fall arrest forces) of the deceleration device during a fall, and the location of that attachment point after the employee comes to a full stop.
6. Equivalent means alternative design, materials, or methods to protect against a hazard, which the employer can demonstrate will provide an equal or greater degree of safety for employees than the methods, materials or designs specified in the standard.

7. Free fall means the act of falling before a personal fall arrest system begins to apply force to arrest the fall.

8. Free fall distance means the vertical displacement of the fall arrest attachment point on the employee's body belt or body harness between onset of the fall and just before the system begins to apply force to arrest the fall. This distance excludes deceleration distance, and lifeline/lanyard elongation, but includes any deceleration device slide distance or self-retracting lifeline/lanyard extension before they operate and fall arrest forces occur.

9. Infeasible means that it is **impossible** to perform the construction work using a conventional fall protection system (i.e., guardrail system, safety net system, or personal fall arrest system) or that it is technologically impossible to use any one of these systems to provide fall protection.

10. Leading edge means the edge of a floor roof, or formwork for a floor or other walking/working surface (such as the deck) which changes location as additional floor, roof, decking, or formwork sections are placed, formed or constructed. A leading edge is considered to be an "unprotected side and edge" during periods when it is not actively and continuously under construction.

11. Lifeline means a component consisting of a flexible line for connection to an anchorage at one end to hang vertically (vertical lifeline), or for connection to anchorages at both ends to stretch horizontally (horizontal lifeline), and which serves as a means for connecting other components of a personal fall arrest system to the anchorage.

12. Personal fall arrest system means a system used to arrest an employee in a fall from a working level. It consists of an anchorage, connectors, and a full body harness and may include a lanyard, deceleration device, lifeline, or suitable combinations of these.

13. Position Device System requires that the employee be not exposed to a fall of greater than 2 feet. This system is not considered adequate as a Fall Arrest System.

7.10 Ladders

7.10.1 Policy

Continuous fall protection must be maintained. Exceptions are listed in 29 CFR 1926 Subpart M. These are the only exceptions unless written OSHA variance is submitted.

All ladders used at the project site shall be free of defects, correctly positioned, properly secured, and stored when not in use.

7.10.2 Purpose

The purpose of this section is to establish control over ladders provided by the Contractors for use on the project to minimize the risk of injury due to ladder deficiencies and/or failure. If an employee observes a deficiency with a ladder, he/she will notify his/her supervisor. The ladder will be **RED TAGGED** until it can be repaired or removed from service. It is the Contractor's responsibility to purchase and use these tags.

7.10.3 Implementation

Each Contractor is responsible for implementing the following ladder requirements:

1. Ladder Construction

   Ladders brought onto the project site will meet the following minimum requirements:

   a. All stepladders should be Type 1 - Industrial. Employers should obtain manufacturer recommended service weight and restrictions on all straight portable and extension ladders. These should have a working rate of up to 275 pounds. No job-built ladders allowed.

   b. Stepladders will be no longer than 20 feet and will have a locking device that will hold the front and back in place. Step spacing will be no more than 12 inches. The inside minimum width at the top shall be 11-1/2 inches and the side rails shall spread one inch

across the steps for each one-foot length. Stepladders will only be used in the fully open and locked position.

c. A single portable straight ladder shall be no longer than 20 feet.

d. Extension ladders shall be no longer than 30 feet.

e. Made of a non-conductive type of material.

f. All ladders must have skid resistant feet or other suitable devices to prevent slipping.

2. Ladder Maintenance

a. Ladders are to be maintained in good condition at all times, joints tight, hardware and fittings securely attached, and movable parts to operate freely without binding or undue play. Defective ladders must be "tagged" out of service.

b. Metal bearings shall be frequently lubricated.

c. Frayed or badly worn draw rope shall be replaced.

d. Safety feet shall be kept in good condition.

e. Rungs shall be kept free of dirt and accumulations of paint, oil, grease and ice.

f. Ladders are to be visually inspected for possible signs of defects before each use.

g. No alterations or modifications can be made to any portable ladders.

h. Ladders shall not be painted (paint may hide serious defects).

3. Use of Ladders

At a minimum the following safety precautions shall be observed before personnel use ladders:

a. Person ascending or descending a ladder shall face the ladder.

b. Where possible portable rung ladders shall be set up so that the horizontal distance from the top support to the foot of the ladder is one quarter of the working length of the ladder. The ladder shall be secured by tying off or other means, or held in place while in use.

c. At least two persons shall be used to position large ladders -- one person shall hold it in place until the other person has secured the ladder. If the ladder is on a surface where slipping could occur, an individual shall hold it in place until the work is completed. Toe plates will be used to support the feet of the ladder when used on soft surfaces.

d. Ladders shall not be placed in front of doors unless the door is blocked or guarded.

e. No more than one person is to be on the ladder at a time.

f. Supplies or equipment shall not be carried by a worker on the ladder. A rope, block and pulley, or other safe methods shall be used to transfer the material.

g. If a ladder is used to gain access to a roof or platform, the side rails shall extend at least three feet beyond the point of support.

h. Ladders shall not be placed on boxes, drums, or other unstable bases to obtain additional height.

i. The top and the top three steps of a stepladder shall not be used as steps. Ladders must extend at least 36 inches beyond the landing surface.

j. Extension ladders should be erected so that the upper section overlaps the bottom section by at least four rungs. All adjustments are to be made from the ground.

k. Ladders located in trenches must be located within 25 feet of the employee's work location.

l. Ladders shall have nonconductive side-rails if they are used where the employees or the ladder could contact exposed energized electrical equipment.

7.11 Confined Space Entry (CSE)

(Refer to Appendix D, Confined Space Entry Checklist)

7.11.1 Policy

All RE, Contractor employees and outside visitors/vendors required to enter a confined space must be fully knowledgeable of the requirements of this section. Prior to the start of such an entry, a Confined Space Checklist (CSC) and a Job Safety Analysis (JSA) (see Section (7.5) will be completed. The Contractor involved in the work will develop a Confined Space Entry Procedure. This procedure will be submitted to the RE/Region Safety Risk Manager. The Contractor will train all personnel who will enter the confined space; no one will enter the confined space area until properly instructed.

7.11.2 Purpose

To establish positive control to minimize risk associated from employees conducting a Confined Space Entry (CSE) under normal operating conditions.

7.11.3 Objectives

The objectives of this section are to:

1. Prevent inadvertent operation of equipment and/or work process while people are working in the confined space.

2. Eliminate unexpected exposure to hazardous materials, oxygen deficient or inert/toxic gaseous atmosphere while working in confined spaces.

3. Plan for a timely and effective response to an emergency during a CSE.

7.11.4 Definitions

1. Confined Spaces - Areas with limited entry and exit, or poor natural ventilation, and not intended for human occupancy. Examples of a confined space include: tanks, covered basins, vaults, columns, mixers, manholes, HVAC systems, boilers, pipelines, sumps, ditches or excavations. The practice of looking into a confined space through an open man way is not a CSE. All spaces shall be considered permit-required confined spaces until the pre-entry procedures demonstrate otherwise.

2. Safety Considerations - Include but are not limited to: atmosphere testing for gaseous conditions/lack of oxygen, appropriate personal protective and emergency equipment, and additional personnel as needed to assure communications and assist the individual conducting the entry.

3. Confined Space Checklist (CSC) - A document to be included within the requirements of a JSA. CSC will be completed by the project supervision in charge of the entry. A sample CSC and CSC for Sewer Entry and a CSE Permit are presented in Appendix D.

4. Permit Required Confined Space - (see Appendix D for checklist. Contractors will provide their own permit). This means confined space that has one or more of the following:

    a. May or may not potentially contain a hazardous atmosphere
    b. Contains a material that has potential for engulfing entrant
    c. Has internal configuration that could trap the entrant
    d. Contains any other recognized serious health or safety hazard

5. Non-Permit Required Confined Space - a confined space that does not contain or with respect to atmospheric hazards, the potential of causing death or serious physical harm.

7.11.5 Implementation

1. Preparation of the CSC

   a. Each section of the CSC must be completed. The CSC may be altered to provide more space for the sections requiring more information, or shortened as conditions dictate. Variables and special conditions will be additionally written in, as required. A Contractor may use their own form after review by the UDOT Safety Risk Manager (appendix D).

   b. The reason for the CSE, a description of the work to be performed, and the protective and emergency equipment needed shall be given on the CSC.

   c. Cleaning/Purging Procedure: Steps listed must assure adequate cleaning. Indicate whether water, steam, nitrogen, air, etc. is the agent to be used, and the quantity and length of time it must be used.

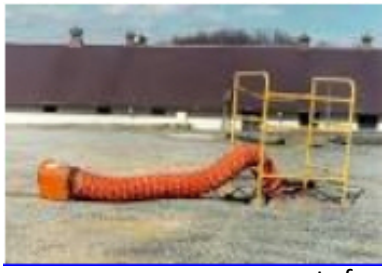

   d. Ventilation Prior to Entry: This section shall discuss initial ventilation used to cool/heat the confined space and remove contaminated air. Air movers may be mounted to blow into or out of the vessel for this purpose; a push/pull system is most effective.

   e. Ventilation for Personnel Entry shall detail the air mover arrangements for personnel safety and comfort. All air movers must be exhausting from the area allowing atmospheric air to be drawn into open man ways, particularly the man way used for entry.

   f. Lighting/Electrical Equipment: The electrical equipment used inside any confined space/vessel will be low-voltage equipment, operating from a voltage-reducing transformer outside or 120-Volt AC operating from a GFCI outside.

   g. Emergency Equipment Requirements: All equipment deemed necessary for a safe vessel entry and emergency response must be itemized, beginning with the name of the assigned watch person and an indication of who is providing the watch (such as, pipe fitters, boilermakers, etc.). This to be followed by means of communications, emergency breathing air, wristlets, body harnesses, rope, ladders, portable hoists, etc.

   h. An Emergency Plan is required for each CSE. This plan will describe what the CSE Watch is to do in the event of an emergency requiring rescue operations.

2. Entry Procedure

   a. The supervisor and Competent Person responsible for the CSE will review and approve the checklist before allowing the crew to enter.

b. Gas Test: Testing of the atmosphere within any confined space is mandatory each time entry is contemplated. Potential hazards must first be determined, what instruments are required to test for these hazards and who is to use the instruments. The testing procedure must be documented on the checklist. Probes and long hoses should be used and all readings recorded on the checklist.

c. Protective Equipment Requirements: Carefully consider the potential hazards the crew could encounter when they come into contact with the atmosphere and chemicals that may be present in the confined space. Consider work procedures and products and equipment to be utilized by the personnel inside the confined space. The list should include all protective equipment that will be used such as acid suits, body harnesses, air blower gloves, safety backup goggles, respiratory protection and portable hoist device to mention a few.

d. Upon completion of all aspects of the confined space preparation for entry, the UDOT Safety Risk Manager will review the preparations and JSA. Upon mutual satisfaction with the Contractor Safety Representative that all concerns have been addressed, the Contractor Safety Representative will complete and sign the CSC. Prior to any Confined Space Entry by the RE, he/she will assure that checklist and Confined Space Permit has been completed.

7.12 Employee Ground Transportation

7.12.1 Policy

All Contractors and visitors are required to use minimum acceptable transportation designed for passenger use.

7.12.2 Purpose

To establish minimum acceptable guidelines for the safe transportation of all personnel traveling within the project confines. Eliminate personal accidents and injuries resulting from improper equipment use.

7.12.3 Responsibility

Contractors are responsible for assuring that all personnel follow the requirements of this section and prohibit improper transportation of employees and visitors. Transporting employees in cargo beds of pick ups, vans, etc. is prohibited, unless approved seats and seat belts are provided with approved roll over protection.

7.12.4 Implementation

1. Mobile cranes, forklifts, winch trucks, front-end loaders, tractors and other materials handling equipment are not permitted to transport passengers. Contractor employees are prohibited from riding on these vehicles. Operators must be seated and using seat belts.

2. Trucks

   a. A maximum of three passengers are permitted to ride inside of the truck cab unless the cab is specifically designed to accommodate additional passengers and includes seat belts for all passengers.

   b. Passengers shall ride with all portions of their bodies inside the truck body or frame.

   c. Passengers shall be in the seated position, with the seat belts in place, before the vehicle is set in motion.

   d. Tailgates will be closed and latched before the vehicle is operated.

   e. Passengers are not permitted to ride in the body of a dump truck or in the bed of a pickup truck.

   g. Passengers are not permitted to ride on top of the load or to hold materials from shifting.

   h. Vehicles must be designed to accommodate passenger transportation or the vehicle will not be used for that purpose.

   i. Drivers transporting passengers will follow the posted speed limit and project traffic rules.

   j. No distractive devices allowed in Company trucks while on the work site.

   k. Company trucks, or trucks of workers used on a regular basis as contractors of any tier, consultants in the execution of assigned duties, must have attached clearly visible company identification other than magnetic signs. Magnetic signs will be allowed for those consultants or inspectors on site no more than once per month.

7.13 Housekeeping

7.13.1 Policy

The basic key to an effective safety and health program is good housekeeping. Safe productivity is enhanced if the project is kept free of trash and debris.

7.13.2 Purpose

The purpose of this section is to incorporate into the day-to-day work activity a good housekeeping action plan that will be followed by all Contractors working on the project.

7.13.3 Responsibility

The Contractors are the most important factor to prevent accidents, through maintaining the work environment free of poor housekeeping conditions. These Contractors, through inspection and example, are responsible for assuring that trash and debris remain out of the work areas. Garbage containers or dumpsters must be provided and maintained in such quantity and at such locations as to eliminate unauthorized disposal of trash refuse or excess materials which the Contractor does not plan to reuse. If poor housekeeping is observed, the Contractors must follow through and make sure that these conditions are corrected immediately.

The Contractors are responsible for all of their work areas. If poor housekeeping practices are observed corrective action will be discussed with the appropriate Contractor to remind them that cluttered work areas will not be tolerated and that their work area(s) pose a hazard to his employees and other personnel.

The Contractor safety personnel must work with the contractors' staff to assure that their safety recommendations are implemented and the work areas remain clear. The contractors should audit their work areas frequently to assure that all debris are removed to minimize hazards.

7.13.4 Implementation

The Contractors and the UDOT Region Safety Risk Manager will inspect the construction site. If these inspections reveal deficiencies the Contractor will make the necessary corrections. Follow-up inspections will be conducted. Areas of concern are described below.

1. Buildings and Field Areas: Inspect floors, walls, ceilings, exits, stairs, walkways, ramps, platforms, driveways and aisles for debris and trash.

2. Processing, Receiving, Shipping, Storage: Consider equipment, job planning, layout, heights, floor loads, projecting equipment and materials, containers, waste disposal, leakage and spillage and the cleaning method used to address each of these areas.

3. Lighting: Along with correct housekeeping, the Contractor should consider the employee's ability to see improper housekeeping conditions. Look at the appropriateness, intensity, controls, condition, diffusion, location, glare and the shadows the illumination provides.

4. Chemicals: Housekeeping can pose severe safety and health difficulties for people that may come in contact with them. The Contractor will perform daily inspections of the areas

where chemicals are kept, and will consider storage, handling, spillage, leakage, transport, disposal, toxicity, appropriate hazard warning signs, and the correct personal protective equipment and general equipment needed to keep the area clean.

5. Fire Hazard: Fire hazards are most frequently caused by poor housekeeping conditions. Review of areas must key in on the prompt removal of trash from the immediate area and from the site itself. Improper storage of oily rags, and lack of general clean up of storage yards and around buildings and confined space locations can contribute to fires.

6. Scaffolding and forms may have nails protruding from the wood. Standard practice is to remove or bend nails over when stripping forms or uncrating materials. When Contractor employees remove these materials from the project this practice will provide an added measure of protection.

7.14 Signs, Signals and Barricades

7.14.1 Policy

The Contractor who creates a condition that poses a potential hazard(s) to the general public, other Contractor employees, the RE and/or visitors to the project site are required to identify those conditions using signs, signals or barricades, as appropriate.

7.14.2 Purpose

To require the Contractor to identify conditions and operations that pose a hazard to the RE employees and/or visitors and to maintain control and warn personnel of these conditions.

7.14.3 Responsibility

1. Prior to the start of operations that may pose a hazard to personnel, such as an overhead lift operation, laser use and non-destructive testing, the Contractor supervisor of the crew conducting operations must place effective warning devices commensurate with the degree of hazards. A JSA will be required. Personnel must be mindful of these warning signs.

2. The Contractor project manager must periodically inspect the work area to assure that warning devices are properly positioned and are effectively warning or restricting all personnel. The Region Safety Risk Manager will independently audit areas to assure hazards are correctly identified. If this inspection reveals a safety problem, a safety inspection report will be prepared identifying deficiencies found and give a copy to the Contractor. The Contractor is responsible for immediately correcting the deficiency(s).

7.14.4 Implementation

1. Warning Signs/Tags Specifications

   Only approved warning signs shall be used to "tag out" equipment. Caution, Warning and Danger signs must meet the approved size, description and color arrangement.

2. Storage Areas

   a. Flammable and combustible storage areas should be identified as "No Smoking" areas, and appropriate warning signs will be posted.

   b. Project locations used to store either toxic chemicals and/or flammable shall be identified to warn personnel of the pending hazard. Vehicles used to transport these materials within the project site will be identified as required by the Department of Transportation (DOT).

3. Contractor Employee Personal Conduct

   a. All personnel and visitors must obey all messages displayed on the signs, barriers and equipment tags.

   b. All Caution, Warning and Danger signs, used in conjunction with the Lockout/Tag-Out procedure, must be read and the instructions followed. The Contractor working on the equipment or system will install the instruction tags. The RE will strictly follow instructions written on instruction tags.

4. Signals

   a. The Contractor should use signals to warn people of overhead lifts and similar operations and prevent unauthorized entry into the danger zone. An air horn or a similar effective device may be used to provide this signal.

   b. The Contractor will use flagmen when traffic conditions are adversely affected by construction operations. Flagmen will use warning vests and traffic signal flags. During hours of dusk and darkness illuminated signals will be provided. The Contractor foreman shall review signaling conditions and determine their effectiveness.

5. Barricades

   a. Barricades will be used but not limited to safeguard project personnel when any of the following conditions exist:

      - When overhead work creates a hazardous condition below
      - When tripping hazards are created
      - When trenches and excavations are cut

- When toxic substances may drain, spill or leak on any project personnel
- When driving hazards are created
- When cleaning vessels, pipes or equipment
- When spray painting operations are conducted
- During non-destructive test operations and operations which include laser and other similar equipment use.

b. Project barricades will be located to maximize personal safeguarding. Each barricade shall warn personnel of the hazard potential, using the appropriate signs discussed in Section A of this procedure.

c. The Contractor supervisor shall select the type of barricade to be used for personnel protection. This barricade may be as simple as hazard warning tape or more complex as a wood barricade corridor.

d. When the hazard is eliminated the barricade should be promptly removed by the responsible Contractor.

7.15 Trenching and Excavation

7.15.1 Policy

All trenching and excavation operations 5 feet and deeper require the installation of a protective system when workers are required to enter the trench/excavation. Site conditions may require additional safeguards or protection in excavations less than 5 feet in depth. All trenching and excavation guidelines can be found in 29 CFR 1926 subpart P.

7.15.2 Purpose

To establish basic guidelines for overall trenching and excavation operations including the safety practices followed by the Contractor. The plan shall consider at a minimum: underground obstructions, soils classification, depth of cut and type of trench/excavation wall protection to be used, personal protective equipment, potential breathing contaminants, location of excavating equipment, storage of spoil and inspection methods. Protection is required on all exposed sides of an excavation to mitigate fall hazards. Review must include a determination that the protective measures in place are adequate for existing conditions.

7.15.3 Scope

This procedure will be followed for all trench and excavation operations unless a Registered Professional Engineer gives a written exemption. The Contractor is responsible for the safety for

all trenching and excavation in their work area. The Contractors Competent Person will evaluate the excavation or trench prior to anyone entering the area. If a problem is observed the responsible Contractor will correct the situation immediately and prior to anyone being allowed to enter the area. The RE's staff will not enter an excavation or trench until the unsafe conditions are corrected. All unsafe conditions must be reported to the UDOT Region Safety Risk Manager.

7.15.4 Implementation

1. Pre-operational Review

   Before the start of any trenching or excavation operation begins the activities described below must be completed by the Contractor and reviewed by anyone who may have to enter the excavation or trench.

   a. A JSA must be completed for each trench and excavation activity 20 feet or greater in depth, hazardous atmospheres exist or are suspected, or where any unique conditions exist. Please refer to Section 9.4, Job Safety Analysis, for specifics of this JSA review.
   b. An OSHA Trenching and Excavation Permit (if required) shall be obtained by the Contractor(s) cutting the trench or excavation. The completion of this document signifies that Contractor supervision and RE have reviewed the planned trenching and/or excavation procedure, drawings, and provided the protective measures.

   c. If piping, electrical conduit or other under ground obstructions are not specifically located, either instruments or probes shall be used to locate that equipment, prior to the start of operations. The Contractor's Foreman shall have a good knowledge of what obstructions might be found, prior to cutting into the soil. Without this knowledge a potential hazard exists.

2. Operational Safety

   At a minimum, all trench and excavation operations shall be guided by the following safety considerations:

   a. When the Contractor using a probe locates obstructions or instrument, all excavating within five feet of an operating line, buried conduit or cable will be "hand dug."

   b. Trench/excavation walls 5 feet and greater in depth, or less if conditions require, shall be shored, sloped or a protective device (such as a trench shield) will be used to protect employees. The JSA and Trench Excavation Permit protective measures shall be followed respective of the type and extent of needed employee protection.

c. If an unexpected condition poses a hazard to employees, such as excessive ground water or lack of soil stability, the work will be discontinued and protective measures re-evaluated. If modifications to the JSA and permit are required, these changes will be completed and the added employee protective measures taken prior to the resumption of soil removal. Personnel will not re-enter the trench/excavation until these additional corrective measures are implemented.

d. Excavated material shall be effectively stored or retained at least 2 feet or more from the edge of any excavation that employees may be required to enter. Boulders and other loose debris will be removed from the work area.

e. The Construction Foreman and/or Competent Person in charge of the work crew shall conduct daily inspections of the trench or excavation area, prior to personnel entry.

f. If evidence of possible cave-ins or slides is apparent, all work in the excavation area will cease until necessary repairs or precautions have been taken to safeguard employees. The Region Safety Risk Manager will be advised of any unusual trench/excavation occurrence.

g. When employees are required to be in trenches four feet deep or more, an adequate means of exit, such as a ladder or steps, will be provided and located so that no more than 25 feet of lateral travel is required to reach an exit.

h. Barricades will be erected by the Contractor doing the digging. Flashing caution lights will be installed at night. The Contractor completing the work will remove the barricades. Fences or other appropriate physical barriers are required when an excavation is to be left open for longer then 24 hours. Barricades will be maintained on a daily basis.

3. <u>General Considerations</u>

a. Maximum Allowable Slopes (see Table 7-1)

- The sides of the cut shall be sloped at the natural angle or degree, which the sloped surface would develop in weathering.
- Normally, a slope angle would be not less than 1.5:1 feet on the horizontal to each foot on the vertical.
- When it is not possible to slope to the angle of the slope, shoring or a protective device must be used to prevent a cave-in. No one will enter a trench without a correct angle of slope, shoring or protective device.

b. Measurement of Slope Angle

- The Slope Angle should be measured as accurately as possible. Measurement should be made with an inclinometer or a combination square in connection with a spirit level and aligned with a board at the edge of the slope. There are several ways to measure angle of the slope, but "eyeballing" is not a valid measurement technique.

- A common way of measuring angle of the slope involved the use of a pole with a weighted string, which is lowered, into the center of the trench.

c. Personnel are reminded that cave-ins may be caused by:

- Hydrostatic pressures from freezing or thawing

- Vibration from vehicles or equipment operating inside the trench, or nearby

- Improper sloping of trench walls

- Failure to place removed soil, equipment or material at a safe distance from the edge of the trench

- Failure to shore properly and to brace trench walls.

- Cave-ins sometimes occur when shoring is being installed or removed. A common, contributing factor to a cave-in is the tendency to omit shoring when the trench is to be left open for only a short time.

d. Lack of Space

To some extent, all employees engaged in trenching operations are exposed to the hazards of cave-ins. Trenches are usually narrow and the lack of space complicates the danger of a cave-in.

e. Warning Signals

Experienced workers may be able to detect an approaching danger of a cave-in from tension cracks, moisture, and changes in soil texture. Less experienced employees are less likely to recognize these indications.

f. Associated Hazards

- Employees are exposed to additional hazards, which involve more than soil movement. Underground utility lines often-present dangerous surprises and account for a large number of fatalities in excavations. Buried electrical cable also poses an additional electrical hazard potential.

- Utility lines for water, steam, and gas present hazardous conditions, which may require the employees to use protective equipment, and to obtain as much advanced information about the location as possible.

- Carbon monoxide can reach hazardous concentrations in trenches and excavations. Accordingly, provisions shall be made for detection and suppression of heavier than air gases, like methane gas.

- The failure to use personal protective equipment has resulted in many injuries, which could have been prevented.

- Local Utility Marking Centers and all other owners of underground facilities not members of a Notification Center shall be advised of the proposed work at least 2 work days prior to start of excavation.

TABLE 7-1
MAXIMUM ALLOWABLE SLOPES

SOIL OR ROCK TYPE	MAXIMUM ALLOWABLE SLOPES (H:V) FOR EXCAVATIONS LESS THAN 20 FEET DEEP [3]
STABLE ROCK	VERTICAL (90°)
TYPE A [2]	3/4:1 (53°)
TYPE B	1:1 (45°)
TYPE C	1½:1 (34°)

NOTES:

1. Numbers shown in parentheses next to maximum allowable slopes are angles expressed in degrees from the horizontal. Angles have been rounded off.

2. A short-term a maximum allowable slope of 1/2H:1V (63 degrees) is allowed in excavations in Type A soil that are 12 feet or less in depth. Short-term maximum allowable slopes for excavations greater than 12 feet in depth shall be 3/4H:1V (53 degrees).

3. Sloping or benching for excavations greater than 20 feet deep shall be designed by a Registered Professional Civil/ Structural Engineer.

4. Soil Description Includes:

   Type A soil: Cohesive soils with an unconfined, compressive strength of 1.5 ton per square foot (tsf) or greater. Examples of cohesive soils are: clay, silty clay, sandy clay, clay loam and, in some cases, silty clay loam and sandy clay loam. Cemented soils such as caliches and hardpan are also considered Type A.

   However, no soil is Type A if:

   (1) The soil is fissured; or
   (2) The soil is subject to vibration from heavy traffic, pile driving, or similar effects; or

   (3) The soil has been previously disturbed; or

   (4) The soil is part of a sloped, layered system where the layers dip into the excavation on a slope of four horizontal to one vertical (4H:1V) or greater; or

   (5) The material is subject to other factors that would require it to be classified as a less stable material.

Type B soil:

   (1) Cohesive soil with an unconfined compressive strength greater than 0.5 tsf but less than 1.5 tsf; or

   (2) Granular cohesion less soils including: angular gravel (similar to crushed rock), silt, silt loam, sandy loam and, in some cases, silty clay loam and sandy clay loam.

   (3) Previously disturbed soils except those, which would otherwise be classed as Type C soil.

   (4) Soil that meets the unconfined compressive strength or cementation requirements for Type A, but is fissured or subject to vibration; or

   (5) Dry rock that is not stable; or

   (6) Material that is part of a sloped, layered system where the layers dip into the excavation on a slope less steep than four horizontal to one vertical (4H;1V), but only if the material would otherwise be classified as Type B.

Type C soil:

(1) Cohesive soil with an unconfined compressive strength of 0.5 tsf or less; or

(2) Granular soils including gravel, sand, and loamy sand; or

(3) Submerged soil or soil from which water is freely seeping; or

(4) Submerged rock that is not stable, or
(5) Material in a sloped, layered system where the layers dip into the excavation or a slope of four horizontal to one vertical (4H:1V) or steeper.

7.16 Project Electrical Requirements

7.16.1 General

The Contractor is responsible for implementation of an aggressive electrical safety program at the Project. This safety program element will include safe installation, work practices, maintenance, and special equipment considerations. All electrical installations, either temporary or permanent, shall be in conformance with the National Electrical Safety Code, NFPA-70, ANSI-C1, and low and high voltage electrical safety orders OSHA code requirements. Only qualified employees will install electrical tools and equipment, defective and/or improperly installed equipment may pose a hazard to personnel simply by being in the work area.

If an unsafe condition is observed the responsible Contractor must correct the hazard immediately.

7.16.2 Hazardous Locations

Where the Contractor/Subcontractor plans to cut a trench or excavation in an area that may contain underground electrical lines, procedures will be undertaken to positively locate the lines prior to the continuation of work. Those circuits, which cannot be adequately guarded, will be de-energized and grounded before digging is allowed to continue. Only hand digging should be permitted within two feet of buried electrical cable.

Congested areas containing electrical equipment, switches, or live circuits will not be used as passageways. The Contractor will install a positive physical barrier to prevent employees from accidentally entering such areas.

7.16.3 Disconnect and Over current Protection

All electrical disconnect and Over current protective devices will be identified as to their purpose. Disconnect and over current devices will be located in a position that will not expose the devices to physical damage. The temporary disconnect power panels must have solid faces to ensure that all current-carrying parts are not exposed to accidental contact. The Contractor(s) shall inspect their temporary power panels at least weekly to ensure that circuits are properly identified, grounded, and safety equipment like ground fault-circuit interrupters (GFCI) are operating correctly.

7.16.4 Ground-Fault Circuit Interrupters (GFCI)

1. Definitions

   a. *Ground*: A conducting connection, whether intentional or accidental, between an electric circuit or equipment and the earth (or to some conducting body which serves in place of the earth).

   b. *Ground-Fault Circuit Interrupter:* A device for the protection of personnel that de-energizes a circuit or portion thereof within an established period of time when current-to-ground exceeds some predetermined value less than that required to operate the Over current protective device of the supply circuit.

2. Implementation

   The Contractor is required to follow the GFCI safety procedures for the use of temporary electrical power in addition to an Assured Conductor Grounding program.

   a. All equipment (electric saws, drills, extension cords, etc.) capable of being plugged into a 110-volt receptacle shall have a GFCI device provided prior to the tool and/or extension cord/tool.

   b. Testing and Record Keeping: All GFCIs should be tested by a competent Contractor representative. The test will be done by introducing a ground fault into the circuit using a commercially available GFCI tester. Test buttons for the circuit may trip the device but may not provide the protection intended if the breaker is faulty or incorrectly wired. A record of testing should be kept, identifying the following: serial number of unit, date of purchase, brand, model number, date of initial testing done before placing into service by using GFCI tester, and date of inspection. Power tools and cords should be inspected and marked on a routine basis, as determined by the Contractor's Assured Grounding Program.

c. Nuisance Tripping of GFCI Devices

The following conditions usually will cause tripping of GFCIs:

- Water leaking into cord connection: This can usually be remedied by using a twist-lock cord and cap. Raising connections out of wet locations will also correct this problem.

- Faulty or defective equipment plugged into a GFCI circuit: By plugging the tool into an entirely different spider or receptacle, it can be determined if that tool is defective. The tool must be tagged "out of service" and repairs made if it is found to be defective.

7.16.5 Equipment and Maintenance

1. No Contractor employee shall perform work on live (energized) electrical components or conductors. Circuits should be de-energized, locked and tagged, and tested to confirm de-energizing. Work on energized or hot systems will require the submission and approval of a JSA.

2. Where it is not possible to de-energize electrical components or conductors, the Contractor employee shall be protected by approved guarding and/or insulation. JSA is required.

3. Portable power tools shall either be grounded or of a double insulated type.

4. Extension cords shall be 12 AWG or better, grounded, and maintained in good condition. Repair to a break in the cord insulation is not allowed.

7.16.6 Installation

Equipment grounding conductors shall be installed as described below.

1. All 120-volt, single-phase, 15- and 20-ampere receptacles shall be of the grounding type, and their contacts shall be grounded by connection to the equipment-grounding conductor of the circuit supplying the receptacles in accordance with the applicable requirements of the National Electrical Code (NEC).

2. All 120-volt cord sets (extension cords) shall have an equipment-grounding conductor, which shall be connected to the grounding contacts of the connector(s) on each end of the cord.

3. The exposed non-current-carrying metal parts of 120-volt cord-and plug-connected tools and equipment that are likely to become energized shall be grounded in accordance with the applicable requirements of the NEC.

7.16.7 Visual Inspection

1. The Contractor will instruct their employees to visually inspect receptacles, flexible cord sets (extension cords), except those that are fixed and not exposed to damage, and equipment connected by cord and plug before each day's use for external defects such as deformed or missing pins or insulation damage and for indication of possible internal damage. Where there is evidence of damage, the damaged item shall be taken out of service and tagged until tested and any required repairs made.

2. All 120-volt, single-phase, 15- and 20-ampere receptacles, which are not a part of the permanent wiring of the building or structure, 120-volt flexible cord sets, and 120-volt, cord and plug-connected equipment required to be grounded shall be tested for continuity and shall be electrically continuous.

7.16.8 Hand Tools and Small Equipment

Qualified individuals will perform all electrical repairs of hand tools after the tool or motor or piece of equipment is disconnected from the source of power. Small tools and equipment that cannot be disconnected will not be repaired until locked and tagged out of service. All maintenance and repair of electric hand tools and small equipment shall return the equipment to a condition, which meets or exceeds the manufacturer's original specification.

7.16.9 Grounding and Bonding

7.16.10 Fixed Equipment

Exposed non-current-carrying metal parts of fixed electrical equipment, including motors, generators, frames and tracks of electricity-operated cranes, electrically driven machinery, etc., must be grounded. Bonding shall be provided where necessary to assure electrical continuity and the capacity to conduct safely any fault current. Electrical continuity of metal non-currents carrying parts of equipment in any hazardous locations as defined in the Electrical Safety Orders is required.

7.16.11 Effective Grounding

The path from circuits, equipment, structures, and conduit or enclosures to ground shall be permanent and continuous, have ample carrying capacity to safely conduct the currents liable to be imposed on it, and have impedance sufficiently low to limit the potential above ground and to result in the operation of the over-current devices in the circuit.

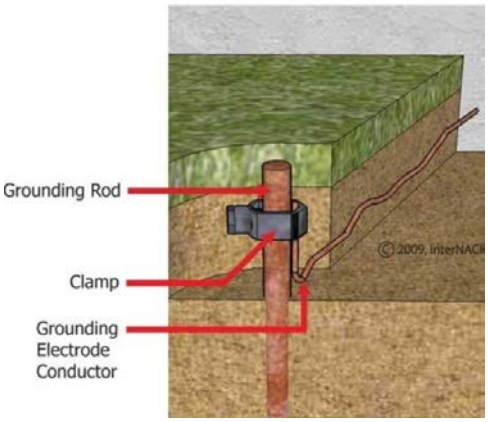

7.16.12 Ground Resistance

1. Pipes, rods of iron or steel, or nonferrous conductors can be used for electrodes. They must conform in diameter to the requirements of the NEC. They should have a clean metal

surface and should be driven to a depth of at least 8 feet regardless of the size or number of electrodes used. Where rock bottom is encountered at less than 4 feet, the electrode should be buried in a horizontal trench, at least 2 feet deep.

2. Single rod electrodes, where practical, shall have a resistance to ground not to exceed 25 ohms. Where the resistance is not as low as 25 ohms, two or more electrodes connected in parallel should be used.

7.16.13 Testing of Grounds

1. Grounding circuits must be checked with a ground meter to ensure that the circuit between the grounded power conductors has a resistance, which is low enough to permit sufficient current to flow to cause the fuse or circuit breaker to interrupt the current.

2. Driven ground rods should be given a special test because of variance in resistance resulting from different soil conditions. They should be checked for corrosion, damage and separation of the ground wire from the clamp.

7.16.14 Wet Locations

In wet or damp areas, where it is determined that the danger of electric shock is increased by the conditions, the following requirements will be enforced:

1. Electrical circuits for lighting and tools should be protected by GFCI and not exceed 110-120 volts.

2. Fixed tools and equipment will use both GFCI <u>and</u> a positive ground.

The Contractor JSA will address special precautions for all work in wet or damp areas.

7.17 Lock-Out/Tag-Out (LOTO) Procedures (JSA Required)

7.17.1 Policy

Equipment should be properly and uniformly locked out and tagged whenever it is down for any reason, in order to protect the exposed employees from inadvertent equipment operation and potential harm.

7.17.2 Purpose

The purpose of this section is to provide a safe method for rendering inactive any electrical equipment or operating systems (including mechanical or piping) when equipment is down for any reason, such as repair, removal or replacement. This procedure is provided in an effort to identify certain LOTO procedural elements. The Contractor's program must meet or exceed this procedure, and contain the basic elements to protect all employees from the potential hazards. Compliance with the established procedures at operating facilities may be required.

7.17.3 Responsibilities

When needed, the Contractor is responsible to assure that a LOTO procedure is put in place in their area of work. The Contractor is responsible to ensure that all construction employees are trained and familiar with and use the procedure wherever it applies. Anyone who may be exposed to the sudden release of energy or materials will be familiar with and abide by the established LOTO procedure.

If an employee observes a safety problem, he/she will notify the Contractor responsible for the area and the RE.

7.17.4 Implementation

1. A LOTO procedure should include three basic phases of work on any system: (1) shutting down equipment, (2) repairing or installing equipment, and (3) startup of equipment. It is likely that some situations will not include all three phases as such; however, regardless of the operation and the phase or phases involved, the "lockout/tag-out" clearance procedure must be observed to assure the safety of the operation.

2. Even though this procedure generally provides for locking and tagging of equipment, the danger tag alone is to be considered a safe guard device and any equipment bearing such a tag must not be operated under any circumstances. Also, locks must be used in conjunction with a tag to afford maximum personnel protection.

3. Prior to starting any major operation, which would involve these locking and tagging procedures, a meeting shall be set up by the supervision, employees and inspectors involved. The project's safety personnel shall attend this meeting. A specific procedure will be adopted and reviewed by all concerned with the operation, prior to commencement of work.

7.17.5 Shutdown and Repair of Equipment or Systems

1. All personnel, before working on equipment should assure that:

    a. Others are not already working on the piece or system, and if others are working on it, that this procedure will not endanger any personnel or the equipment.

    b. Equipment is not under pressure, energized, at elevated temperature or otherwise unsafe to be worked upon.

2. Others adjacent to the work area are not endangered.

3. Before starting work, the supervisor shall contact the designated supervisor (responsible for the equipment or system). This supervisor will show him the devices that require tagging

(i.e., switches, starters, valves, lockout controls, etc.). This will be accomplished by using an approved danger tag.

4. The main disconnect shall be opened in addition to any remote control switches. On electrical work, it is advisable as a further precaution for the electrician to remove the supply fuses. On piped systems, the main valves shall be closed and pressure relieved. The supervisor shall make sure that the equipment or system is inoperative.

5. After assuring that the equipment has been properly shut down in accordance with the procedures described above, the supervisor and employees involved in the work shall positively determine that the equipment or system has been locked and tagged. A distinctive danger tag and lock will be attached to each device. This tag shall be dated and signed by the individuals doing the work. A short explanation of the reason for the tag should appear in the provided spaces. Only authorized personnel will repair specific equipment with system danger tags.

6. If mechanically possible, a padlock (to which only the employee placing the lock shall have access to keys) shall be placed on equipment in such a manner as to render operation of the equipment.

7.17.6 Starting Up Equipment or Systems

1. As soon as the work is completed, the danger tags and locks shall be removed only by the individuals installing them.

2. In the event the shift ends before the work is completed, the status of the work is to be reported in detail to the oncoming shift personnel and the tags and locks on the system replaced by the oncoming shift personnel.

3. Upon completion of the work, the Contractor supervisor will make certain all tags and locks have been removed and personnel are clear of the equipment or system. The equipment will be returned to normal operating conditions.

7.17.7 General

1. In an emergency, or if the person who placed the tag and lock is not available, the Lock and Tag Removal Procedure established in the Contractors LOTO procedure will be implemented.

2. Personnel violating LOTO procedures will be subject to disciplinary action to include their removal from the project.

7.17.8 Safety Engineering Standard for Lockout/Tag-Out Procedure for Electrical or Electrically Powered Equipment

1. Procedure

Whenever it becomes necessary to perform service, maintenance or alterations to electrically powered equipment, the following procedure is to be followed:

a. The Contractor supervisor (and employees working on the system) having care and custody of the equipment will secure tag and locks to all stations from which the equipment can be started and initiated. An electrical lockout/ tagout record shall be completed prior to calling an electrician to lock and tag the power source.

b. The electrician will obtain the electrical lockout tag from their Contractor supervisor and will isolate the appropriate power source and affix a lock and a lockout tag in such a manner as to prevent the power source from becoming energized. The electrician will then sign the lockout tag and identify reason for equipment being locked out. The construction craft supervisor will log the lockout tag number into his Electrical Lockout Status logbook or equivalent log.

c. The responsible electrician and the construction craft supervisor will verify that the designated equipment has been isolated by attempting a start from one of the start stations. The "try" attempt must be made on all locked and tagged equipment.

d. When the crew arrives at the project job-site, the lockout tag will be assigned and will be prominently displayed at the job-site. The Contractor supervisor will verify that the lockout is in place by witnessing a representative attempting to start the equipment from the field start switch or visually checking the lockout in the substation of the motor control center each time a safe work permit is issued to service the locked out equipment.

e. A set procedure must be established to energize the equipment. This procedure must include the responsible Contractor supervisor and the craft electrician. Procedure established must ensure that equipment is not inadvertently energized and be foolproof.

2. Work Continuing Beyond Shift Change

   a. If work is to be continued beyond the "normal" shift, the lockout tag and the Safe Work Permit will be returned to the responsible Contractor supervisor indicating the status of the job.
   b. Contractor supervisor shall transfer both the tag and the permit to the supervisor of the oncoming shift after relating all precautions needed to perform the work safely.

   c. If the work is not carried on continuously by an oncoming shift, the Contractor supervisor's lockout tag logbook must indicate the status of any extended lockout condition.

3. Testing

   The above procedure will apply to the electrical testing of circuits with the following addition. Electricians testing circuits or "bumping" motors may energize the circuit for short periods of time while testing without voiding the lockout procedure provided:

   a. Craft electrician has all Contractor supervisors' permission to test.

   b. He has all lockout tags in his possession.

   c. Testing may be done only when no other work is being performed by any other crew on the equipment being tested.

   It is extremely important that the operations supervisor’s to prevent inadvertent operation of the equipment during these periods tag all remote start switches.

4. Work Done By Multiple Crews

   If more than one crew is assigned to work on the equipment initially or at any subsequent time during the duration of the job, each crew will independently obtain a lockout tag and lock device to assure circuits/equipment cannot be energized by any one crew acting independently.

7.18 Nondestructive Testing

7.18.1 Policy

Prior to the start of operation, the Contractor conducting nondestructive test operations should submit its safety and health plan for review. The plan must detail required documentation to ensure that Contractor employees are not exposed to potentially harmful levels of radiation.

7.18.2 Purpose

The purpose of this procedure is to establish and maintain effective controls over all nondestructive testing operations, and require that all employees are not exposed to harmful levels of radiation.

7.18.3 Definitions (Ionizing Radiation)

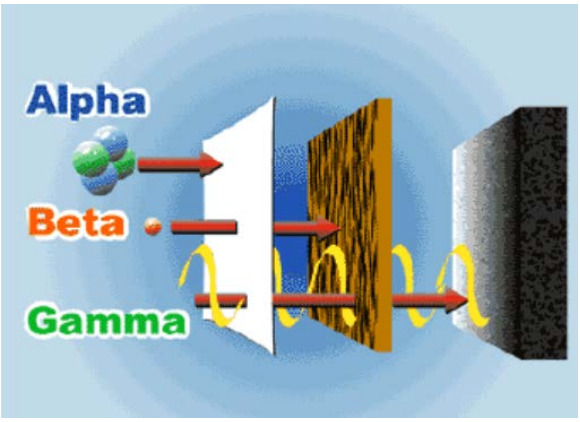

1. Radiation: Includes alpha rays, beta rays, gamma rays, X-rays, neutrons, high-speed electrons, high-speed protons, and other atomic particles, but such terms do not include sound, radio waves, visible light, infrared or ultra-violet light.

2. Radioactive material: Any material, which emits, by spontaneous nuclear disintegration, corpuscular or electromagnetic emanations.

3. Restricted area: Any project area the access to which is controlled by the contractor for purposes of protecting individuals from exposure to radiation or radioactive materials.

4. Unrestricted area: Any area the access to which is not controlled by the contractor for purposes of protecting individuals from exposure to radiation or radioactive materials.

5. Dose: The quantity of ionizing radiation absorbed, per unit of mass, by the body or by any portion of the body. When the provisions in this section specify a dose during a period of time, the dose is the total quantity radiation absorbed, per unit of mass, by the body or by any portion of the body during such period of time. Several different units of dose are in current use.

6. Rad: A measure of the dose of any ionizing radiation to body tissues in terms of the energy absorbed per unit of mass of the tissue. One rad is the dose corresponding to the absorption of 100 ergs per gram of tissue (1 millirad (mrad) = 0.001 rad).

7. Rem: A measure of the dose of any ionizing radiation to body tissue in terms of its estimated biological effect relative to a dose of 1 roentgen (r) of X-rays (1 millirem (mrem) = 0.001 rem). The relation of the rem to other dose units depends upon the biological effect under consideration and upon the conditions for irradiation. Each of the following is considered to be equivalent to a dose of 1 rem:

    a. A dose of roentgen due to X- or gamma radiation.

    b. A dose of 1 rad due to X-, gamma, or beta radiation.

    c. A dose of 0.1 rad due to neutrons or high-energy protons.

    d. A dose of 0.05 rad due to particles heavier than protons and with sufficient energy to reach the lens of the eye.

    e. If it is more convenient to measure the neutron flux, or equivalent, than to determine the neutron dose in rads, 1 rem of neutron radiation may, for purposes of the provisions in this section, be assumed to be equivalent to 14 million neutrons per square

centimeter incident upon the body; or, if there is sufficient information to estimate with reasonable accuracy the approximate distribution in energy of the neutrons, the incident number of neutrons per square centimeter equivalent to 1 rem may be estimated from the neutron flux dose equivalents.

8. Air dose: For determining exposures to X- or gamma rays up to 3 million electron volts (MeV), the dose limits specified in this section may be assumed to be equivalent to the "air dose." For the purpose of this section "air dose" means that the dose is measured by a properly calibrated appropriate instrument in the air at or near the body surface in the region of the highest dosage rate.

9. Testing agency: The contracted designee responsible for testing operations.

7.18.4 Responsibility

1. Contractors and/or their testing agency shall be required to establish safe operating procedures and record keeping methods commensurate with the test operation.

2. Contractors and/or their testing agency shall abide by OSHA safety requirements and submit the operating safety and health plan prior to the start of operations.

7.18.5 Implementation

1. General

   a. The Contractor and/or testing agency shall provide a safety program, which addresses the type of nondestructive testing used:

      - Magnetic particle
      - Penetrant
      - Ultrasonic
      - Turboelectric
      - Electromagnetic
      - Radiographic

   b. The testing agency program(s) shall be submitted to the RE prior to the start of test operations.

2. Licenses/Certifications

   The testing agency shall maintain all licenses and/or certifications required for nondestructive test operation(s). These documents shall be available for review commensurate with federal/state requirements.

3. Testing Agency Safety Programs

Each Contractor should contractually task their testing agency to provide a safety program and designate an individual responsible for implementing that program. This program must at least include the detail included in this procedure. Independent testing agency program(s) should include as an appendix to the JSA.

4. Radiation

   a. Prior to the initial use or operation of a radiation-producing machine or the storing, using or handling of any radioactive material, the RE's representative shall be notified of such action, including a statement on the proposed location, nature and scope of such operation, use, or storage.

   b. All radiation machines and radioactive materials shall be used, stored, handled, transported, or disposed of in such a manner that no person receives an unnecessary dose of radiation.

   c. In the use or application of radioactive material, permissible doses, levels of radiation, concentrations, precautionary procedures, and disposal shall be within the limits and controls in applicable federal/state safety requirements.

   d. Operations involving radiation hazards shall be performed under the direction of a qualified person designated as responsible for radiation safety, and shall conduct such surveys and evaluations, and secure specialized assistance required to ensure compliance with radiation protection standards. In case of materials used under Nuclear Regulatory Commission (NRC) license, only persons actually licensed or Competent Persons under direction and supervision of the licensee shall perform such work.

   e. The dose for an individual shall include all doses, from both internal and external sources from all types and energies of radiation, whether delivered simultaneously or successively, to the region of interest during the period of measurement.

   f. Dosimeters shall be maintained on all persons exposed to radiation where the dosage can exceed one-fourth the permissible limits established, and on each individual who enters a high-radiation area. Instruments and dosimeter devices shall detect and provide for measurement, within an acceptable error, of the accumulated dosage of all types of radiation to which personnel are exposed.

   g. Records shall be maintained by the testing agency of the exposure of personnel to radiation in such a manner that accumulated exposure can be determined at a future date.

   h. Personnel shall not be exposed to a dose in excess of that prescribed for the general public. Personnel under 18 years of age and pregnant women shall not be permitted in

an area where there is a possibility of body intake of radioactive material from such sources as contamination or radio-chemical procedures.

i. Periodic and terminal examinations will be given when over exposures are detected by the dosimeter program or in accordance with the testing agency's program.

j. All cases of overexposure shall be referred to a physician and reported to the RE.

k. Any loss, theft, damage, or overexposure shall be reported to the designated authority and the NRC under the requirements of 10 CFR Part 20 and the UDOT Region Safety Risk Manager.

l. Interstate or intrastate transportation shall comply with the requirements of the Department of Transportation for transportation of explosives and other dangerous articles.

5. Non-ionizing Radiation

a. Only qualified and trained employees shall be assigned to install, adjust, and operate laser equipment.

b. Personnel, when working in areas in which a potential exposure to direct or reflected laser light greater than 0.005 watts (5 milli-watts) exists, shall be provided with laser safety goggles which will protect them for the specific wavelength of the laser and be of optical density (O.D.) adequate for the energy involved. The laser safety goggles will be selected in accordance with the requirements of ANSI Z136.1.

c. All protective goggles shall bear a label identifying the following data:

- The laser wavelength for which use is intended
- The optical density of those wavelengths
- The visible light transmission.

d. Areas in which lasers are used shall be posted with standard laser warning placards.

e. Beam shutters or caps shall be utilized, or the laser turned off, when laser transmission is not actually required. When the laser is left unattended for a period of time, such as during lunch hour, overnight, or at change of shifts, the laser shall be turned off.

f. Only mechanical or electronic means shall be used as a detector for guiding the internal alignment of the laser.

g. The laser beam shall not be directed at personnel. Revolving laser units shall be set above or below the heads of personnel.

h. When it is raining or snowing, or when there is dust or fog in the air, the operation of laser systems shall be prohibited where practicable; in any event, employees shall be kept out of range of the area of source and target during such weather.

i. Laser equipment shall bear a label to indicate maximum output, make, and beam spread.

j. Personnel exposure shall be controlled to stay within the levels specified in ANSI Z136.1.

k. Looking into the primary beam must be avoided and care shall be exerted to avoid looking at specula reflections at the beam including those from lens surface work.

l. Aligning the laser with the naked eye is prohibited.

m. Personnel shall not be exposed to microwave power densities in excess of 10 miliwatts per square centimeter and radio frequency generating equipment.

7.19 Concrete Operations

7.19.1 General

This section establishes the safety requirements for concrete construction and masonry work, including specialty operations. Specialty operations include pre-stressing, post-tensioning, tilt-up slabs, vertical and elevated slabs, slip forms, and the batch plant operations.
The Contractor will be responsible for all concrete operations safety in the area of their work.

The following paragraphs describe the items the Contractor is responsible for.

7.19.2 Concrete Mixing

1. The concrete mixing machinery and equipment, including conveyors, chutes, hoppers, gear and chain drives, and all moving equipment will be guarded to prevent entry into the danger zone. Machinery guarding should be checked daily for compliance.

2. All batch-mixing areas should be well lighted. Noise level monitoring of these areas is required to determine levels of hearing protection necessary to protect personnel, signs must be posted.

3. The ad-mix storage area will be well ventilated and all containers sealed to prevent excessive dust. All compressed air and pressurized hoses will be joined with positive fail-safe joint connectors. Personnel working in the ad-mix area will be required to wear appropriate dust masks, hearing and eye protection in addition to the required standard personal protective equipment.

4. Batch plant workers shall be thoroughly oriented to the chemicals and materials in use. Potential hazards and special handling, as well as any unique fire or explosion hazards, will be on file on a Material Safety Data Sheet (MSDS) (see Section 6.3). Personal protection equipment must be provided as required in MSDS instructions

5. All maintenance and mechanical inspection operations will be performed under a positive "lockout tag-out".

7.19.3 Bulk Transportation

The transport of bulk materials and mixed concrete in and out of the Project and/or batch plant area presents what may be the most hazardous part of the operation. All bulk material transports and concrete trucks should require an employee to act as a traffic controller or spotter while operating in the batch plant perimeter or restricted location(s). One-way traffic patterns, with proper road signs and stop signs may be established to avoid backing, U-turns, and reversing direction. Pressurized loading or unloading systems will be inspected at each use and all hose connections should have a fail-safe closing mechanism. It is recommended that during large concrete pours, an additional worker be assigned as a traffic coordinator/spotter.

7.19.4 Concrete Cylinders

Concrete cylinder storage areas will be maintained separate from batch plant operations. Concrete cylinders will be stored on pallets stacked no higher than 5 feet. Concrete testing equipment, including press equipment used to break cylinders, will be properly guarded.

7.19.5 Reinforcing Steel

The following are minimum requirements for the safe handling, installation and use of reinforcing steel:

1. All personnel working with reinforcing steel must wear required personal protective equipment at all times when they are within the work area.

2. Contractor employees will use Fall Arrest System prior to placing and tying reinforcing steel in walls, piers, columns, etc. (Refer to Section 7.8 Fall Protection).

3. Contractor employees will not work above vertically protruding materials or reinforcing steel unless it has been protected to eliminate impalement. This can be accomplished by bending the steel over or covering the protruding ends of the steel with approved/ manufactured/ engineered covers.

4. Reinforcing mats may not be used as a walkway for general access unless provided with 2-inch by 12-inch planking to afford safe footing for personnel after rebar mat is complete and access is necessary.

5. Good housekeeping will be maintained at all times to reduce tripping and falling hazards.

6. Bundles of reinforcing steel moved by any type of crane must be securely tied together to prevent slipping. Steel bundles over 20 feet in length are to be handled by properly spaced two-part slings.

7. Reinforcing steel for walls, piers, columns, and similar vertical structures must be guyed and supported to prevent collapse.

8. Wire mesh rolls must be secured to prevent uncoiling.

9. Reinforcing steel must not be used for scaffolding hooks or stirrups, nor shall it be used as a load-bearing member of any lifting device.

10. Guiding of reinforcing mats and columns when required.

7.19.6 Concrete Placement

1. <u>Mixers</u>

   a. All gears, chains and rollers of mixers must be properly guarded to eliminate pinch points. When concrete mixers are equipped with one yard or larger loading skips, they will be equipped with a mechanical device to clear the skip of material. Protective guardrail installed on each side of the skip of these mixers will prevent anyone from walking under the skip while it is being lowered.

   b. Transit trucks shall be equipped with a loud warning device (back up alarm), which is automatically activated immediately when the truck is backing.

   c. A spotter shall be assigned to warn personnel working on the sub grade when a truck is backing into the area and to signal the truck driver when all workers are clear. The spotter should be on the driver's side and to the rear of the vehicle.

   d. Waste material shall not be allowed to accumulate around mixers and pumps.

   e. Switches must be locked in open positions, tagged, fuses removed, throttles closed, and operating power of mixers locked in the off position when cleaning inside the drum.

   f. When trucks are discharging on a slope, the wheels must be blocked and the brakes set to prevent movement. If trucks are unloading into concrete buggies, these should be routed to provide a smooth flow of traffic.

2. <u>Runways</u>

   Runways shall be strongly built, evenly supported, and have a smooth-running surface of sufficient width to prevent buggies running off. Runways shall be of a flat enough slope so

that workers will not slip, or cleats shall be fastened to sloping runways when the incline exceeds one-foot rise in a five-foot run. All runways must be kept free of ice, snow, grease, mud and other slipping hazards.

3. Concrete Buggies

Buggies are to be kept clean and material must not be allowed to collect on the inside. Stop cleats must be used at all places where buggies are dumping materials. Handles of buggies shall not extend beyond the wheels on either side of the buggy. The use of knuckle guards on buggy handles is recommended.

4. Crane Buckets

a. Concrete buckets positioned by cranes are to be suspended from deep-throated hooks, equipped with a swivel and safety latch. A signalman shall be posted in clear view of the receiving area and the crane operator. Where this is not possible, a reliable communication system shall be used.

b. Concrete buckets equipped with hydraulic or pneumatically operated gates shall have positive safety latches or similar safety devices installed to prevent premature or accidental dumping. Buckets shall be designed to prevent aggregate and loose material from accumulating on the tops and sides of the bucket.

c. Riding on concrete buckets for any purpose is prohibited, and concrete workers must be kept out from under suspended buckets. All buckets will be equipped with safety-tag lines to control direction.

5. Conveyors

Conveyors will be designed, installed, operated and maintained in accordance with the provisions of the ANSI code for conveyors, cableways and related equipment, and applicable parts of OSHA Regulations.

6. Pump Systems

a. Pump systems using discharge pipes should be provided with pipe supports designed for 100-percent overload. Where personnel are required to work from the pipe supports,

the supports and scaffolding shall have a minimum safety factor of 4. Compressed air hose in such systems shall be provided with positive fail-safe joint connectors to prevent separation of sections when pressurized. Two safety tag lines will be used to control the end of the pump chute and trunk.

b. Concrete pumping units shall have their wheels off the ground when equipped with hydraulic outriggers.

7. Walkways and Scaffolding

Walkways and scaffolding, equipped with guardrail, shall be provided along the access and point of placement in walls, piers, columns, etc., located over 6 feet above the floor or ground level.

8. Concrete Tools

a. Powered and rotating type concrete troweling machines that are plainly guided shall be equipped with a control switch that will automatically shut off the power whenever the operator removes his hands from the equipment handles.

b. Conductors, frequency changes, and other energized parts on concrete vibrators shall be installed and grounded in accordance with applicable provisions of the National Electrical Code.

c. Handles on bull floats, used where they may contact energized electrical conductors, shall be constructed of nonconductive material, or insulated with a nonconductive sheath with electrical and mechanical characteristics providing the equivalent protection of a handle constructed of nonconductive material.

9. Shotcreting

In applying shot Crete containing chemicals and hazardous accelerators or hardening mixtures, the nozzle man and helpers shall wear gloves and sandblasting hoods supplied with filtered air free of toxic or objectionable material or other personal protective equipment as required by the manufacturer. Mixing machines require guarding the moving parts, including those within the material hopper. Personal protection equipment shall be provided as required in Portland Cement MSDS and also for any toxic additions to mix.

10. Patching, Finishing and Curing

    a. Scaffolding, boatswains chairs, harness and lines shall be provided for finishing and curing crews working on walls, piers, columns, and other vertical or hazardous sloping surfaces. An independent tie off (free of the structure) will be provided for fall protection devices.

    b. Finishers will be required to wear safety glasses and face shields when chipping, wire brushing or using power impact or rotary tools in patching concrete.

7.19.7 Concrete Forms

1. All structural members and their connections will be carefully planned so that a sound determination for the loads may be accurately made and allowable stresses calculated.

2. Formwork must be adequately designed, erected, supported, braced and maintained so that it will safely support all vertical and lateral loads that may be applied until such loads can be supported by the concrete structure.

3. Good housekeeping must be maintained at all times, and stripped lumber and materials intended for reuse must be cleaned of nails and wire and removed from the immediate work area.

4. Adequate fire protection must be provided in areas where wood forms and other combustible materials are being used in connection with welding, cutting, burning or other sources of ignition.

5. Form supports and wedges must be checked during concrete placement to prevent distortion or failure.

6. Imposition of any construction loads on the partially completed structure shall not be permitted unless such loading has been considered in the design and approved.

7. Drawings or plans showing the jack layout, formwork, shoring, working, decks, and scaffolding must be available at the job-site for ready-reference.

8. Forms intended for use where there is a free fall of 6 feet or greater shall be equipped with adequate scaffolding guardrail, or employees working on the forms shall be protected from fall exposures at all times during forming and stripping operations (refer to Section 7.8).

7.19.8 Placing and Removal of Forms

1. Only personnel actually engaged in forming and stripping operations will be allowed in the immediate work area; appropriate warning signs and barriers will be used. Employees will be instructed that when cutting tie wires under tension, care must be taken to prevent back lash which might hit the body, particularly the face, eyes or throat.

2. When forms are moved or raised by crane, cableway, A-frame, or similar mechanical device, forms shall be securely attached to wire slings. Use of No. 9 tie wire, fiber rope and similar makeshift lashing to support forms is prohibited. Tag lines will be used in moving panels or large sections of forms by crane or hoist. Panels and built up form sections shall be equipped with metal hoisting brackets for attachments of slings.

3. Vertical forms being raised or removed in sections shall not be released until adequately braced or secured. Likewise, overhead forms shall not be released until adequately braced or secured.

7.19.9 Slip Forms

1. The steel rods or pipe on which the jacks climb or by which the forms are lifted shall be especially designed for that purpose. Such rods must be adequately braced where not encased in concrete.

2. Jacks and vertical supports shall be positioned in such a manner that the vertical loads are distributed equally and do not exceed the capacity of the jacks.

3. Jacks or other lifting devices should be provided with mechanical dogs or other automatic holding devices to protect against failure of the power supply or the lifting mechanism.

4. Lifting shall proceed steadily and uniformly and shall not exceed the predetermined safety rate of lift. A jacking system, which provides precise, simultaneous movement of the entire form in small pre-selected increments, is recommended for large structures.

5. Lateral and diagonal bracing of the forms shall be provided to prevent excessive distortion of the structure during the sliding operation. While the slide is in operation, the form structure shall be maintained in line and plumb.

6. All vertical lift forms shall be provided with scaffolding or work platforms completely encircling the area of placement.

7. Workmen placing reinforcing steel ahead of the placement shall wear safety belts/harness tied off to lanyards or otherwise securely fastened when working above the scaffold level.

7.19.10 Shoring

1. Formwork, as previously discussed, will be designed, fabricated, erected, supported, braced and maintained to be capable of supporting all loads that may be applied to the formwork.

Shoring, bracing and supports will be in conformance with ANSI A-10-9-1983. A false work plan or shoring layout shall be available on the job site.

2. Shoring equipment will be included in all drawings, plans, and revisions for jack layout, decks and scaffolds.

3. All shoring equipment (including spares used in re-shoring operations) must be inspected prior to erection to insure the equipment is in good shape and meets the specification in the formwork drawing. Damaged equipment will be removed from the project for repair or destruction.

4. Erected shoring will be inspected before, during and after the pour. Damaged or weakened shoring will be reinforced or replaced. Written certification is required for pre-placement inspection.

7.19.11 Single Post Shores

1. Single post shores must be designed by a qualified structural Engineer, vertically aligned, spliced to prevent misalignment and braced in two mutually perpendicular directions at the splice. Each tier will be similarly braced. Adjustment of the single post shores will not be made after the pour begins.

2. For stability, single post shores shall be horizontally braced in both the longitudinal and transversal directions and diagonal bracing will be installed. Such bracing shall be installed as the shores are being erected.

3. Devices which attach to the external lateral stability bracing shall be securely fastened to the single post shores.

4. All base plates or shore heads of single post shores shall be in firm contact with the footing sill and the form material.

5. When formwork is at an angle, or sloping, or when the surface shored form is sloping, the shoring shall be designed for such loading by a qualified Engineer.

6. Adjustments of single post shores to raise formwork shall not be made after placement of concrete.

7.19.12 Re-shoring

1. Re-shoring will be erected when the original shores are removed if the slab is required to support loads, which exceed its capacity.

2. Re-shoring shall be thoroughly checked to determine that it is properly placed and that it has the load capacity to support the areas being re-shored.

3. When motorized carts are used, the design load shall be increased 25 pounds per square foot in all cases.
4. The sills for shoring shall be sound, rigid and capable of carrying the maximum intended load without settlement or displacement.

5. Reasonable precautions should be taken so that weather conditions do not change the load-carrying conditions of the soil below the minimum design.

6. When excessive earth disturbance has occurred, an Engineer or other qualified person shall supervise the compaction and reworking of the disturbed area and determine that it is capable of carrying the loads, which are to be imposed upon it.

7.19.13 Tubular Welded Frame Shoring

1. All metal frame shoring equipment shall be inspected before erection.

2. Metal frame shoring equipment and accessories shall not be used if they are heavily rusted, bent, dented, re-welded, or have other defects.

3. All locking devices on frames and braces shall be in good working order, coupling pins shall align the frame or panel legs, pivoted in place, and all components shall be in a condition similar to that of original manufacture.

4. Devices which attach to the external lateral stability bracing shall be securely fastened to the legs of the shoring frames.

5. When formwork is installed at an angle, or sloping, or when the surface shored form is sloping, the shoring shall be designed for such loading by a qualified Engineer.

7.19.14 Tube and Coupler Shoring

1. All tube and coupler components shall be inspected before being used. Defective equipment will not be used.

2. Tubes of shoring structures shall not be used if they are heavily rusted, bent, dented or have other defects.

3. Couplers (clamps) shall not be used if they are deformed, broken or have defective or missing threads on bolts, or other defects.

4. All base plates, shore heads, extension devices, or adjustment screws shall be in firm contact with the footing sill and the form materials, and shall be hung against the posts.

5. Eccentric loads on shore heads and similar members shall be prohibited unless the shore heads have been designed for such loading.

6. Special precautions shall be taken when formwork is at angles, or sloping, or when the surface shored form is sloping.

7.19.15 Masonry Construction

1. General

   During erection, a limited access zone with appropriate barricades will be established. This zone will be equal to the height of the wall plus 4 feet and will remain until the wall is adequately braced or shored. In addition, masonry walls shall not be built higher than 8 feet, unless adequately braced or until provision is made for the prompt installation of permanent bracing at the floor or roof level immediately above the story under construction.

2. Saws

   a. Masonry saws shall be guarded by semicircular enclosures over the blade and by a slotted horizontal hinged bar mounted underneath the enclosure to retain fragments of the blade in case it should shatter while in use.

   b. A safety latch shall be installed on notched saws to prevent the motor and cutting head assembly from lifting out of the notches.

   c. Blade speed shall be maintained in accordance with the manufacturers' specifications.

   d. Stationary masonry saws shall be equipped with adequate dust collection and removal systems.

   e. The motor frames of all stationary saws shall be grounded through conduit, water pipe, or a driven ground. Portable saws shall be grounded through three-pole cords attached to grounded electrical systems wherever they are indicated to be part of the tool electrical connection.

   f. Saw operators shall wear approved safety glasses and face shields and hearing protection.

   g. Approved dust respirators shall be worn by personnel exposed to dust concentrations exceeding threshold limit values (TLV).

   h. Masonry saws shall be inspected at regular intervals and maintained in safe operating condition.

7.19.16 Masons' Scaffolds

Masons' scaffolds shall be designed, constructed, and maintained in accordance with American National Standard Safety Requirement for Scaffolding, under the direct supervision of a Competent Person. They shall be maintained in safe condition, and tools, materials and debris shall not be allowed to accumulate in quantities such as to create a hazard.

7.19.17 Material Handling, Storage and Use

1. All material bags, containers, or bundles, and other material stored in tiers must be stacked, blocked, interlocked and limited in height so that they will be stable and safe against sliding or collapse.

2. Maximum safe load limits of floors within buildings and structures in pounds per square foot must be conspicuously posted in all storage areas, except for floors or slabs on grade. Maximum safe loads shall not be exceeded.

3. Aisles and passageways shall be kept clear to provide for the free and safe movement of material handling equipment or employees. Such areas must be kept in good repair.

4. Material stored inside buildings under construction must not be placed within 6 feet of any hoist way or floor openings, nor within 10 feet of an exterior wall, which does not extend above the top of the materials stored.

5. Employees required to work on stored material in silos, hoppers, tanks, and similar storage areas must be equipped with lifelines and safety belts.

6. Overloading floors or roof with building materials shall be prevented by preplanning safe loading arrangements and design load restrictions.

7.19.18 Cement Handling

Bags of cement and mortar will be stacked in an orderly manner in order to maintain stable piles, stepping back the layers and cross keying the bags at least every ten bags high. Bags must be removed uniformly from the top of the piles to avoid tipping of the stacks. Broken pallets and empty bags must be disposed of promptly to eliminate fire and tripping hazards.

7.19.19 Brick Storage

1. Brick shall not be piled on uneven or soft ground, but should be stacked on planks, except where the surface is of asphalt or concrete.

2. Brick shall not be stacked for storage purposes on scaffolds. This practice does not prohibit normal supplies on bricklayers' scaffolds during actual bricklaying operations.

3. Brick stacks must not be more than 7 feet in height. When a loose brick stack reaches a height of 4 feet, it must be tapered back 2 inches for every foot of height above the 4-foot level.

7.19.20 Partition Blocks

Blocks shall always be stacked in tiers on solid, level surfaces. Stacked piles are to be limited to a height of 6 feet whenever possible. If blocks are stacked higher than 6 feet, the pile must be stepped back one-half block per tier above the 6-foot level, to prevent the pile from toppling.

7.19.21 Sand, Gravel and Crushed Stone

If these materials are to be stored against walls or partitions, extreme care will be taken to ensure that the stability of such structures are not endangered due to the weight of the stored materials.

7.20 Pre-Cast Concrete

Pre-cast concrete units, structures, and tilt-up wall panels must be adequately supported to prevent overturning and to prevent collapse until permanent connections are completed.

7.20.1 Lifting Devices

1. Tools and strand devices shall be kept clean and in good repair.

2. Lifting inserts that are embedded or attached to concrete members, other than tilt up, shall be capable of supporting at least four times the maximum intended load applied to them. Lifting devices for other pre-cast members must be capable of supporting five times the load. Only those employees essential to the operation will be allowed in the immediate vicinity of pre-cast lifting or tilt-up.

3. Vacuum lifting devices must be applied only to smooth clean surfaces. An automatic cutoff must be provided to prevent loss of suction in the event of failure of the compressor power source, tank, lines or other attachments.

4. Panels must be securely and adequately braced in final positions, and bracing shall remain in place until sufficient support is provided by portions of the final structure. Standing vertical panels shall be braced to withstand 10-lbs/sq. ft. wind load during construction, and are to be protected against possible impact by moving vehicles or equipment.

   An erection plan and procedure must be prepared by a Civil Engineer registered in the state of Utah and kept available at the job site when applicable. Field Modifications must to be

approved by the responsible Engineer and added to the plan and procedure kept at the job site. Concrete erection stresses, lift point attachments and locations in tilted up concrete panels shall be designed by a currently Registered Engineer. Plans shall be available at the site.

7.20.2 Jacking Equipment

Jacking equipment shall not be loaded beyond its safe working capacity, and the threaded rods and other members that transmit loads to the jacks shall have a minimum safety factor of 2.5. Jacking equipment used in lift slab operation shall meet the following requirements:

1. Jacks shall be so designed and installed so that they will not continue to lift when overloaded.

2. Jacks shall be installed with a safety device, which will enable them to continue to support the load in any position should the jack malfunction and lose its lifting ability.

3. The maximum number of plainly controlled jacks on one slab shall be limited to 14, and in no event should the number be too great to permit the operator to maintain the slab level within specified tolerances.

7.20.3 Uniform Lifting

1. Jacking operations shall be synchronized in such a manner as to ensure even uniform lifting of the slab. If leveling is automatically controlled, a device shall be installed which will stop the operation when the two-inch tolerance is exceeded or when there is a malfunction in the jacking system. If level is maintained by plan controls, such controls shall be located in a central location and attended by a trained operator while lifting is in progress.

2. No one shall be permitted under the slab during jacking operations.

7.21 Pipelines

Section 6.14 of this document covers Trenching and Excavation Operations.

1. While the excavation is open, existing underground installations adjacent to or crossing the excavation shall be protected, supported or removed as necessary to safeguard employees. Each employee entering an excavation 5 ft. or greater in depth must be protected from cave-ins.

2. A ladder or other safe means of egress shall be located in the trench excavations 4 feet or greater in depth, within 25 feet of employees in the excavation.

3. Employees exposed to vehicular traffic shall be provided and required to wear warning vests. Encroachment upon public streets or highways will require a system of traffic controls. Flaggers are required where

barricades and warning signs cannot control the moving traffic. Flaggers shall be trained in proper methods of flagging moving traffic.

4. No employee will be permitted underneath loads handled by lifting or digging equipment. Employees must stand away from any vehicle being loaded or unloaded to avoid being struck by any spillage or falling material.

5. When mobile equipment operating adjacent to an excavation or required to approach the edge of the excavation, and the operator does not have a clear and direct view of the edge, a warning system must be utilized such as barricades, hand signals, or stop logs. This operation may place an unacceptable surcharge on the shoring system and require design by a registered Engineer.

6. Hazardous atmospheres require adequate precautions to provide oxygen content of 19.5% or greater and prevent concentrations in excess of 10% of the LED of flammable substances. Entry and work inside the pipelines and its structures will require prior planning of work procedures.

7. Water Accumulation: Employees shall not work in excavations in which there is accumulating water until proper precautions are taken. These will vary but could include special support or shield systems to protect from cave-ins; water removal may require a gravel layer to allow water migration to a pump. Deterring wells adjacent to the excavation may be required. A Competent Person, if required, shall monitor water removal. Excavations cutting across natural drainage channels or sloping ground may require diversion ditches, dikes or piping to prevent surface water entering the excavation.

8. The pipe laying site and adjacent related areas require daily inspections by the Competent Person for evidence of possible cave-in, failure of protective systems or other hazards relating to the pipe laying operation. Hazardous conditions will require correction prior to work in that area.

9. Where employees or equipment are required or permitted to cross over excavations over 6 feet deep and wider than 30 inches bridges with guardrails will be provided. Spectators or employees not required for the work should not be allowed within 6 ft. of the trench and pipe laying operations.

10. The removal of existing asbestos cement pipelines may expose employees to asbestos. This operation will require persons with specialized training for removal and disposal of the pipe.

7.22 Cranes and Hoisting Equipment

1. Cranes and hoists shall not be used without a current annual certificate of inspection and testing issued by a recognized crane examiner. A copy of the certification shall be given to the RE prior to start-up.

2. Cranes or hoisting equipment shall be operated only by qualified and designated personnel. A written test capable of assessing the operator's competence shall be administered by the Contractor and successfully completed before personnel are allowed to operate a crane or other hoisting equipment. All contractor crane operators working within the UDOT Rights of way must possess a current Utah State approved CCO certificate.

3. Crane operators shall make a written inspection of their equipment prior to its first operation on any work shift (Appendix H). A written inspection by a qualified person is required every 750 operating hours or every 3 months which ever comes first. Documentation must be available at the site for review.

4. Rated load capacities and recommended operating speeds, special hazard warnings, or instructions, shall be conspicuously posted on all equipment; they shall be visible to the operator from their control station. A fire extinguisher of 10ABC rating shall be available at all operator stations or cabs of equipment. Crane operations area shall be kept clear of loose tools and material.

5. Loads shall be attached to the hook by means of slings or other suitable rigging to insure the safe handling of the load (refer to safe rigging section). Hook or ball painted white or yellow may be visible in poor visibility situations. All cranes shall use only lashed or bolted lumber for outrigger 'pads'. The placement of cranes on paved surfaces or on uneven, disturbed, wet or loose footings will require the use of approved outrigger pads.

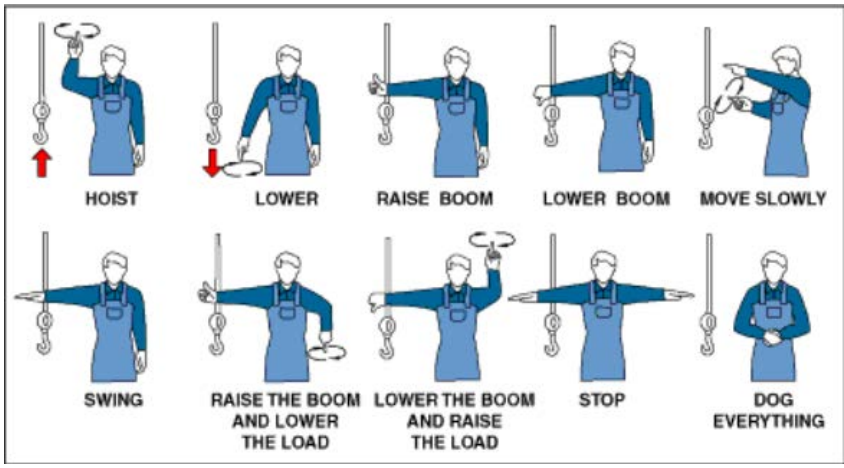

6. A signaler (only one) using the uniform hand signals, (see signal chart) shall be used to direct the operator when the point of operation is not in direct view of the operator, unless a radio or other positive means of communication is used.

7. The operator shall respond to signals from only one person. The operator shall not follow any signal, which is not understood, but shall always obey a stop signal.

8. The operator shall be responsible for the operations and load under their control at all times. Whenever there are doubts about the safety of movement, the operator shall stop operations until safety is assured.

9. A warning signal, such as a horn, shall be sounded to alert personnel to proximity of moving loads. Loads should not be passed over personnel, and personnel should not be permitted to work in the area directly under a suspended load.

Concrete buckets - No employee shall be permitted to work under concrete buckets while the buckets are elevated.

To the extent practical, elevated concrete buckets shall be routed so that no employees, or the fewest number of employees, are exposed to the hazards associated with falling concrete buckets. (Employees shall keep out from under suspended loads at all times.)

10. Cranes shall not be operated or loads handled in such a manner that any machine part or load will come within ten feet of electrical lines carrying 50,000 volts or less. Greater distances are required for lines carrying over 50,000 volts. Post warning signs in plain view of operator.

11. No person shall be permitted to ride on loads, slings, hooks, buckets or other such load handling attachments.

12. All repairs, adjustments, modifications, rigging assembly or dismantling shall be conducted only by qualified and authorized personnel.

13. Rotating cranes shall be barricaded or other positive means shall be taken to prevent personnel from entering the area between the rotating machine deck, and any stationary machine parts or outside obstructions.

14. A critical lift checklist (see Appendix C) will be completed anytime:

    a. Two cranes are used to make a lift,

    b. When a lift is within 90% of the load chart, or

    c. Any unusual conditions are encountered.

15. Crane suspended work platforms will only be used if there is no other safe means to reach the work area. The Contractor will complete a JSA and submit to the RE prior to the lift.

16. Any overhead wire shall be considered to be energized unless and until the person owning such line or operating officials of the electrical utility supplying the line assures that it is **NOT ENERGIZED** and it has been visibly grounded at the work site.

17. Operations adjacent to overhead lines are prohibited unless at least one of the following conditions is satisfied:

    a. Power has been shut off and positive means taken to prevent the lines from being energized. Visible grounding is required.

    b. The operation, erection, handling, or transportation of tools, machinery, materials, structures, scaffolds, or the moving of any house or other building, or any other activity where any parts of the above or any part of an employee's body will come

closer than the minimum clearances from energized overhead lines as set forth in Table 1 shall be prohibited.

Operation of boom-type equipment shall conform to the minimum, clearances set forth in Table 2, except in transit where the boom is lowered and there is no load attached, in which case the distances specified in Table 1 shall apply.

TABLE 1	
General Clearances Required from Energized Overhead High-Voltage Conductors:	
Nominal Voltage (Phase-to-Phase)	Minimum Required Clearance (Feet)
600 50,000	6
Over 50,000 345,000	10
Over 345,000 750,000	16
Over 750,000 1,000,000	20

TABLE 2	
Boom-type lifting or hoisting equipment clearances required from energized overhead high-voltage lines:	
Nominal Voltage (Phase-to-Phase)	Minimum Required Clearance (Feet)
600 50,000	10
Over 50,000 75,000	11
Over 75,000 125,000	13
Over 125,000 175,000	15
Over 185,000 250,000	17
Over 250,000 370,000	21
Over 370,000 550,000	27
Over 550,000 1,000,000	42

18. Work activity which could affect or be affected by overhead lines shall not be initiated until coordinated with the local and appropriate utility officials.

19. Overhead transmission and distribution lines shall be carried on tower or poles, which provide safe clearances over roadways, structures, vehicles and for the operation of construction equipment.

7.23 Rigging

No lifting or hoisting operation can be safe unless properly rigged. The following policies are provided to help insure that operations involving hoisting and the application of ropes, slings, chains and accessories are done safely. For further information consult the Bureau of Reclamation "Construction Safety Standards" and the Construction Safety Association of Ontario "Rigging Manual”.

7.23.1 Responsibilities

1. Planning: Major rigging operations must be planned and supervised by Competent Personnel to ensure that the best methods and most suitable equipment and tackle are employed.

2. Supply and care of rigging equipment: Job management must ensure that:

    a. Proper rigging equipment is available.
    b. Inspect all rigging before use and periodic documented inspections are required (see Appendix J).
    c. Correct load ratings are available for the material and equipment used for rigging.
    d. Rigging material and equipment are maintained in proper working condition.

3. Rigging Operation: The supervisor of the hoisting operation should be responsible for:

    a. Proper rigging of the load.
    b. Supervision of the rigging crew.
    c. Ensuring that the rigging material and equipment have the necessary capacity for the job and are in safe condition.
    d. Ensuring correct assembly of rigging material or equipment as required during the operation, such as the correct installation of lifting bolts.
    e. Safety of the rigging crew and other personnel as they are affected by the rigging operation.

7.23.2 General Rigging Procedures and Precautions

1. Know the safe working load of the equipment and tackle being used. NEVER exceed this limit.

2. Determine the weight of the load before rigging it.

3. Examine all hardware, equipment, tackle and slings before use and destroy defective components.

4. If you think equipment or rigging is unsafe, report it to your supervisor immediately. Do not use it until deemed safe.

   * Illustrations and Tables in this Section are courtesy of the Construction Safety Association of Ontario.

5. Never carry out rigging or hoisting operations if weather creates a hazard to personnel, equipment, property or the public. Rated hoisting capacities should be de-rated when winds exceed 20 mph.

6. Whenever the temperature is below freezing (32 degrees F), extreme caution must be exercised to ensure that no part of the hoist or crane structure or rigging is shock loaded or impacted as brittle fracture of the steel can result.

7. The most repeated hazards to riggers and those persons handling loads is electrocution caused by the contact of the boom, load line or load of a crane with electric power lines. Observe distance limitations and other precautions whenever working around energized power lines. Crane and other boom type equipment must have high voltage warning signs posted in view of operator.

8. The load must always be kept below the boom point or upper load block. Side loading reduces stability and introduces stresses for which the equipment is not designed. Rapid swinging also reduces stability. Observe all of these precautions.

9. Remember, you must take into account the weight of hook blocks, hooks, slings, equalizer beams, material handling equipment, etc., in determining the maximum allowable load you can handle.

10. The stability, safety and effectiveness of crane operations is dependent on the level positioning and ground or surface firmness. ASME 5-3.4.6 Footing. Firm footing under both crawler tracks, all tires, or individual outrigger pads should be level within 1% (percent).

Where such footing is not otherwise supplied, it should be provided by timbers, cribbing, or other structural members to distribute the load so as not to exceed the allowable bearing capacity of the underlying material. Appendix K of this manual illustrates the method and type of cribbing materials acceptable when additional pads are required in conjunction with the manufactures attached pads.

All Rigging Equipment Must be Counted as Part of the Load

Fig. 7.8 All Rigging Equipment Must be Counted as Part of the Load

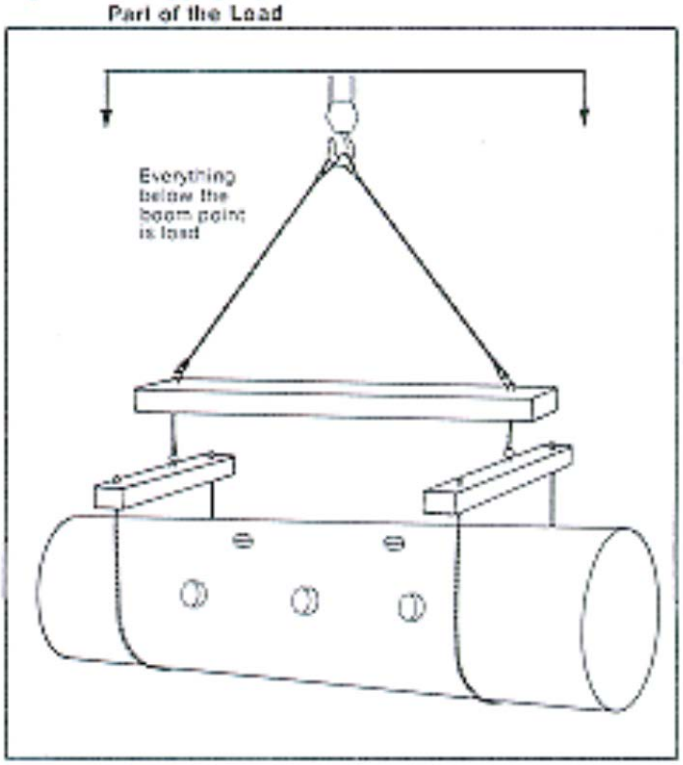

10. Job fabricated rigging hardware may be used only if:

    a. It is designed and certified by a licensed, qualified Engineer
    b. It is tested to 125% of the rated working load.
    c. It is clearly and permanently marked with its rated load.

    All three conditions must be satisfied.

7.23.3 Chain

1. Only alloy steel chain will be used for hoisting purposes. It is normally stamped with an "A" on each link.

As shown: Identification of Alloy Steel Chain.

Fig. 3.1 Identification of Alloy Steel Chain

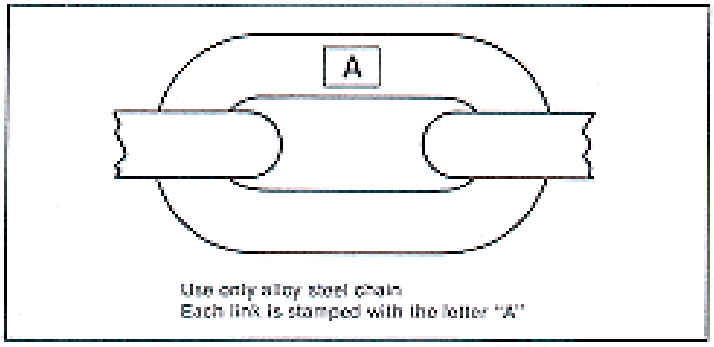

2. Each chain must have an I.D. tag as shown below:

   Every Chain Should Have an Identification Tag

Fig. 3.2 Every Chain Should Have an Identification Tag

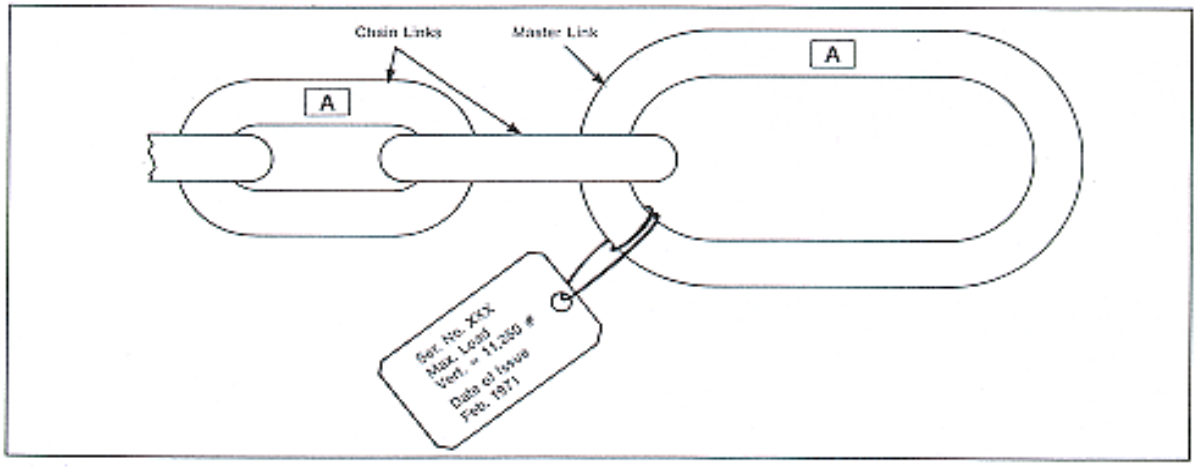

3. Never jerk or impact-load a chain.

4. Never twist or knot a chain.

Fig. 3.7 Never Twist or Knot a Chain

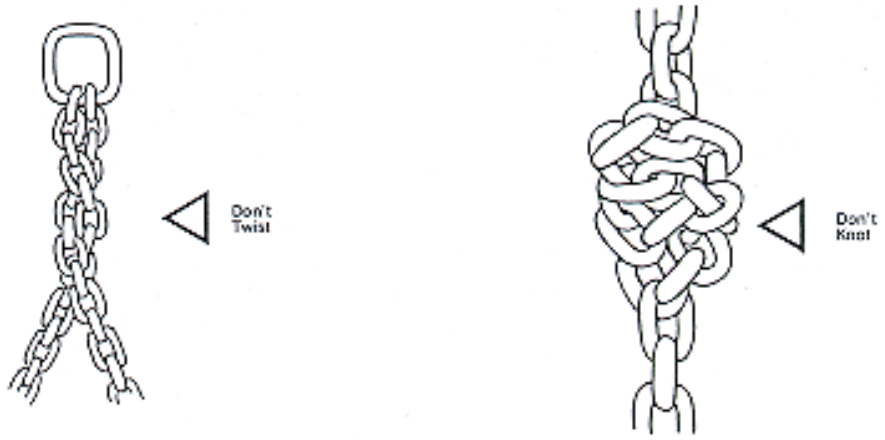

7.23.4 Wire Rope

1. The safe working load for wire rope will not be exceeded.

2. When replacing wire rope on a crane, follow the manufacturer's recommendations. Spool the rope properly to prevent twisting, kinking, etc. as shown.

Methods of Winding Rope from Reel to Drum or Reel to Reel

Fig. 1.24 Methods of Winding Rope from Reel to Drum or Reel to Reel

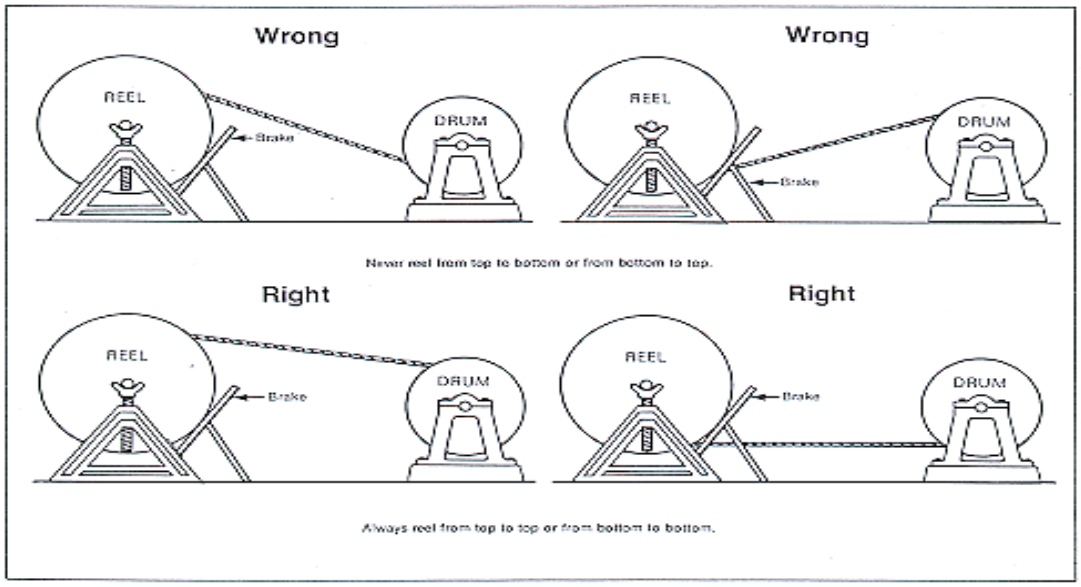

3. When wedge socket fastener is used, it should be installed as shown below:

Fig. 1.70 Proper Method of Securing Dead End of Rope When Using a Wedge Socket

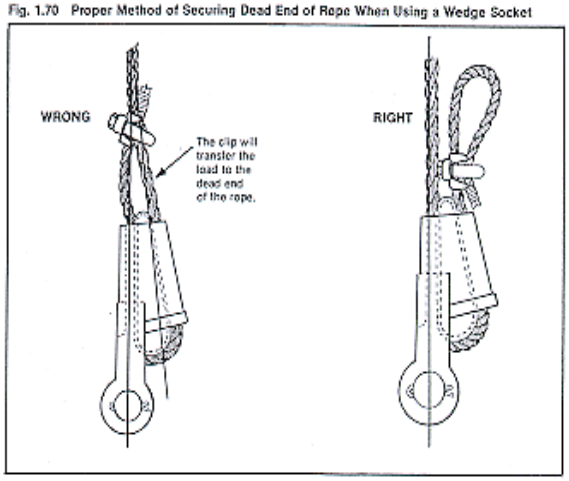

Fig. 1.71 Installing a Wedge Socket on a Rope

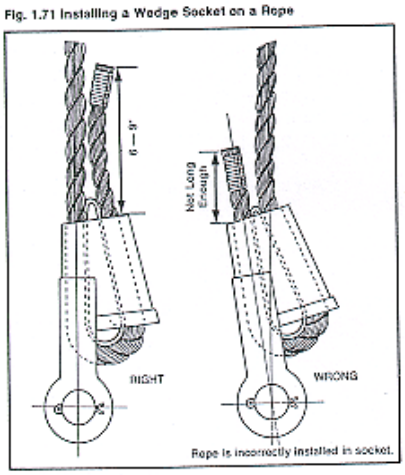

4. Wire rope clips will not be used to form eyes or to make wire rope splices.

5. Wire rope with one or more of the following defects will be removed and replaced:

   A. **Corrosion:**

      Corrosion may result from acids or alkalis. Rust film, which has not resulted in pitting or loss of the original individual wire diameter, should be removed and the rope lubricated.

   B. **Broken wire:**

      1) One or more valley breaks. (A valley break is an individual wire break occurring in the valley between two adjacent strands.)

2) Six randomly broken wires in one wire rope lay or three wires in one strand in any one lay.

Fig. 1.41 Rope Replacement Criteria Based on the Number of Broken Wires

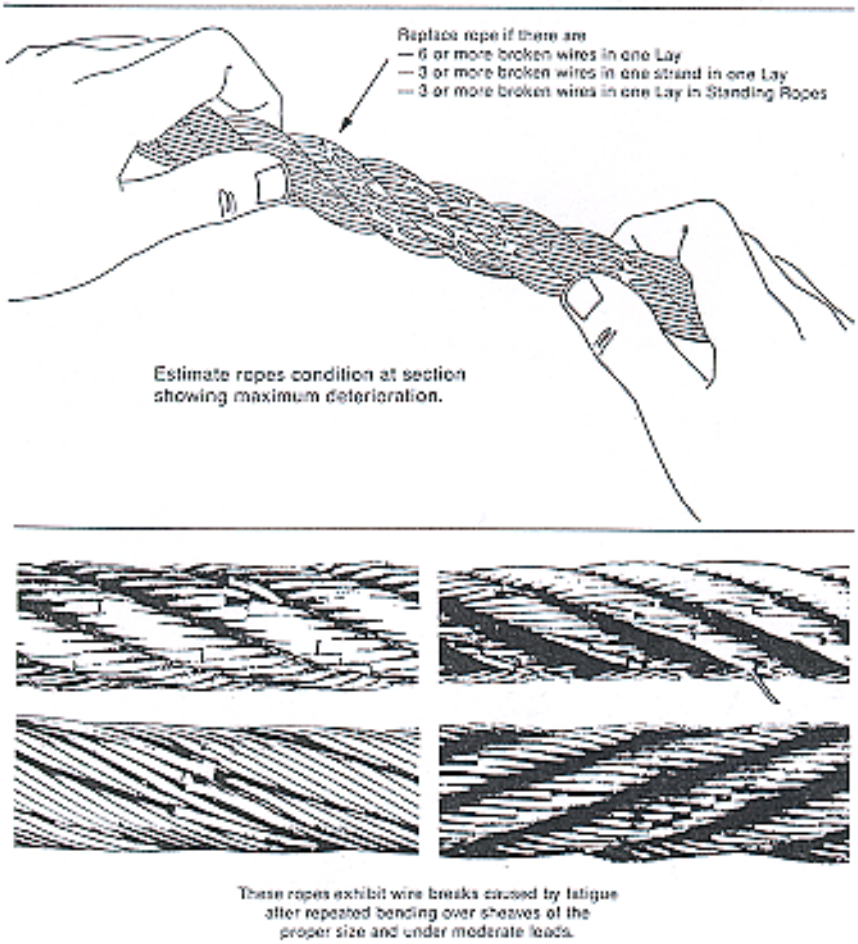

Fig. 1.42 Broken Wires Near Fittings

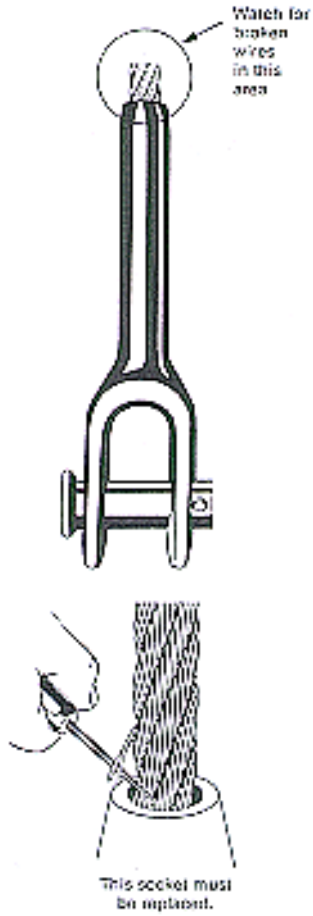

C. **Abrasion:** Abrasion, scrubbing, flattening, or penning resulting in loss or more than one-third the original diameter of the outside wires.

D. **Kinking:** Kinking, crushing, bird caging, or other damage resulting in distortion of the rope structure.

E. **Heat Damage:** Evidence of heat damage resulting from a torch, excessive friction, or contact with electrical wires.

F. **Reduction in diameter.** Reductions from nominal diameter of more than 3/64 inch for rope diameters up to and including 3/4 inch, or more than 1/16 inch for diameter 7/8 to 1-1/8 inches, and of more than 3/32 inch for rope diameters 1-1/4 to 1-1/2 inches.

Fig. 1.45 Reduction in Rope Diameter

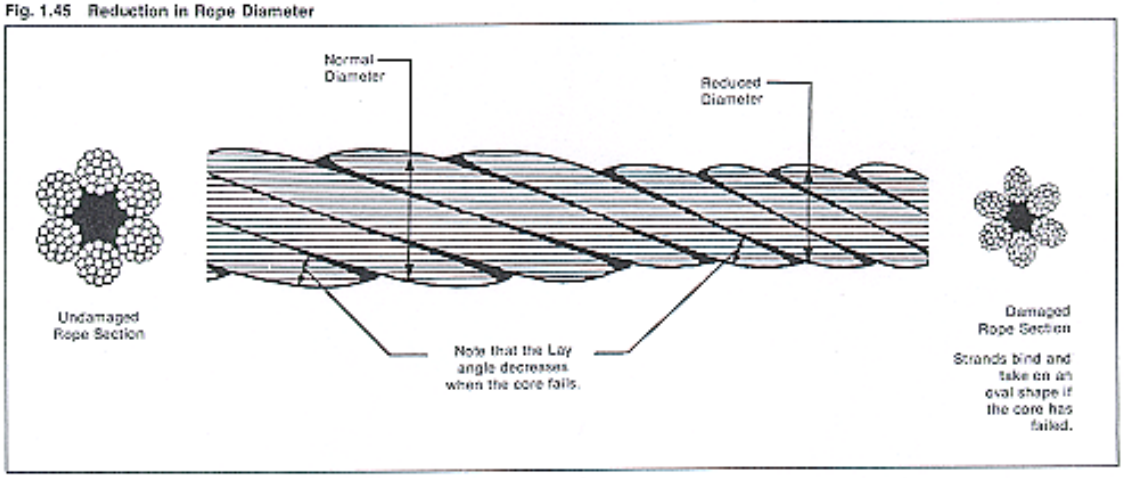

Fig. 1.46 Rope Stretch

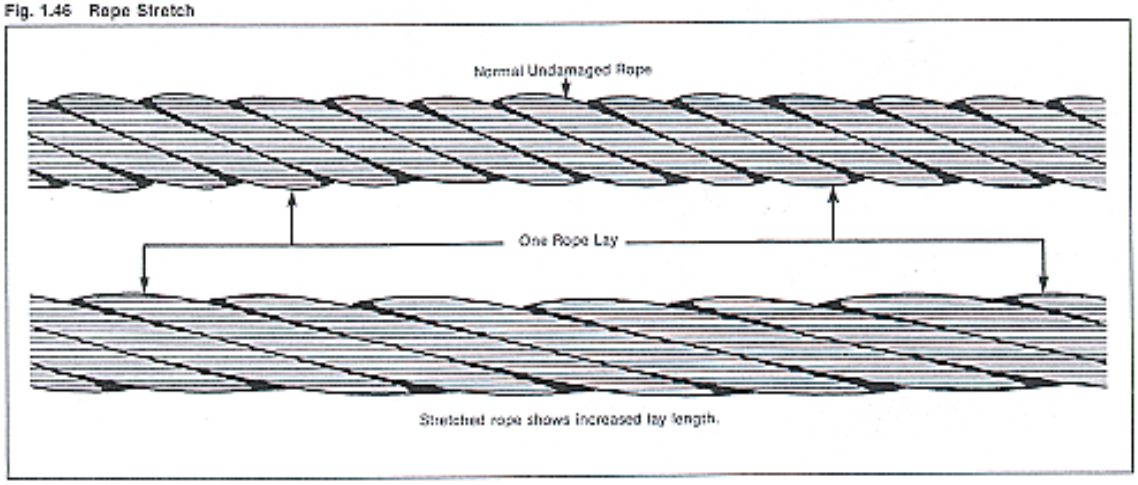

6. If two or more broken wires or corrosion are found adjacent to a socket or end fitting, the wire rope will be re-socketed or removed from service.

7. Defective wire rope should be cut up and discarded or painted "safety orange" or "safety red" to identify it as defective.

7.23.5 Slings

1. Safe working loads will not be exceeded.

2. All slings should be equipped with I.D. tags as shown below:

All Slings Should Carry Identification Tags

Fig. 7.9 All Slings Should Carry Identification Tags

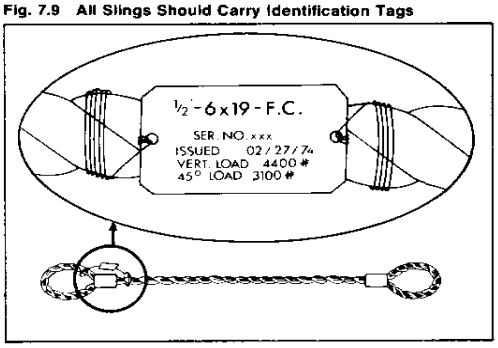

3. Synthetic web slings are recommended for certain applications where they have advantages as shown. They are also light in weight and easy to handle.

Metal End Fittings (illustrations)

Fig. 6.22 Synthetic Web Slings do not Damage or Crush Like Wire Ropes or Chain

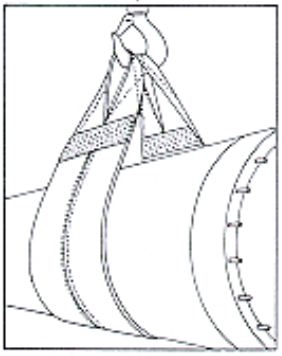

Fig. 6.27 Metal End Fittings

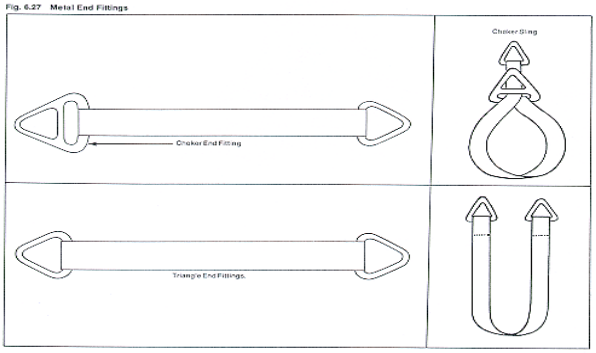

4. Synthetic web slings have wear indicators (usually red threads embedded in the fabric). Discard the sling when the wear indicators begin to show. Discard cut or frayed synthetic slings. Use softeners and wraps to prevent severe wearing from rough concrete surfaces or sharp metal.

5. Synthetic web slings are sensitive to fumes, vapors, sprays, mists, or liquids of acids or phenol. Avoid exposure to any of these.

6. Whenever having wire rope slings made up, get a Flemish eye with pressed metal sleeve and a thimble. The thimble prevents crushing and abnormal wear.

7. The following illustrations are some basic safe working rules and applications for rigging with slings.

Fig. 6.2 2-Leg Bridle Hitches

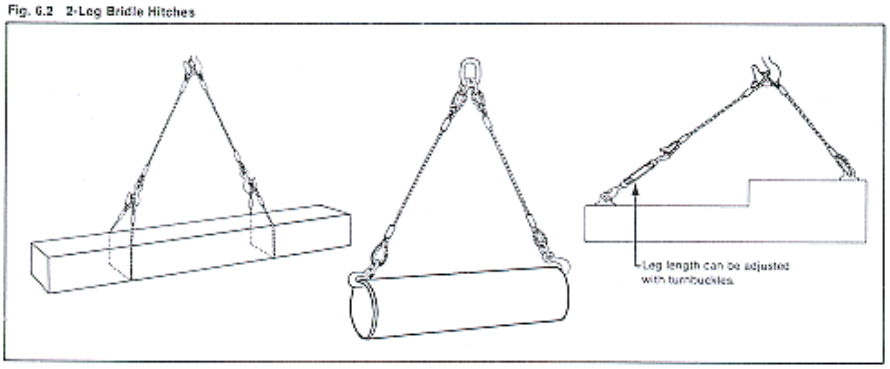

Fig. 6.23 Pipe handling illustrates the tendency of webbing slings to mold themselves to the load. This allows handling irregularly shaped loads securely.

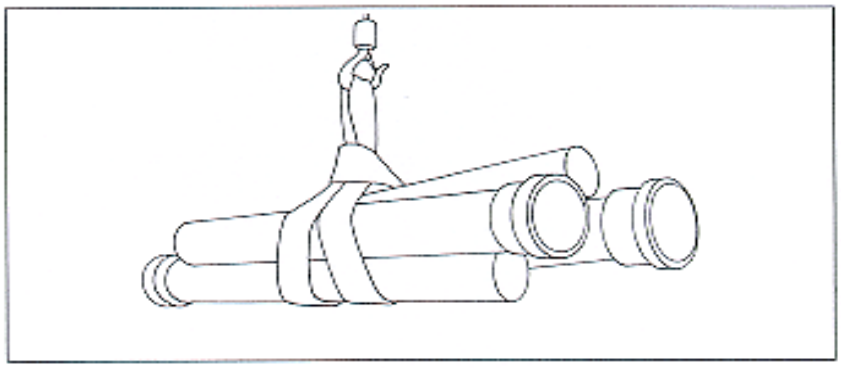

Fig. 6.3 3-Leg Bridle Hitch

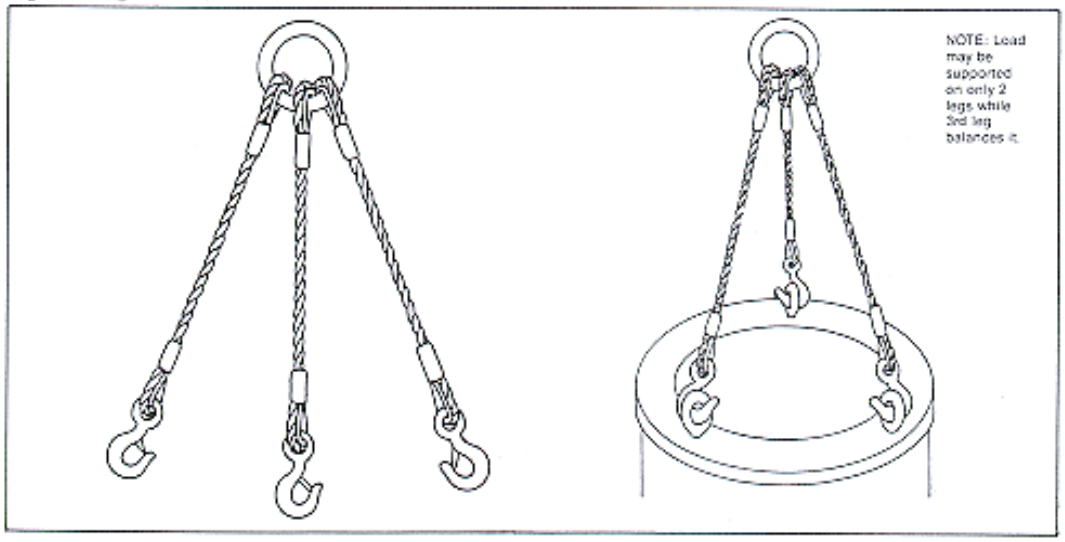

Fig. 7.10 Ensure that Slings are Protected at All Sharp Corners on Heavy Items

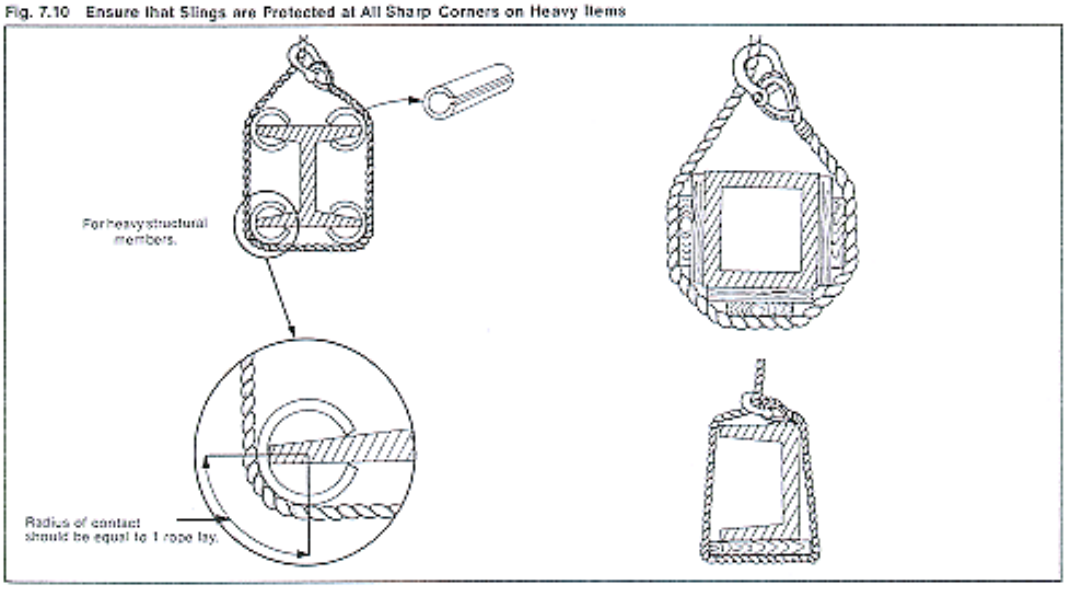

Fig. 7.14 On a Rigid Object the Load Could Be Carried On Only 2 Legs or Sling While Other Legs Only Serve to Balance.

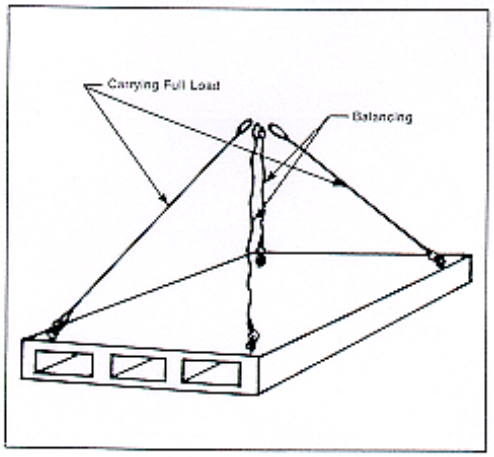

Fig. 7.15 Know What the Load in Each Sling Leg will be Before the Lift is Made

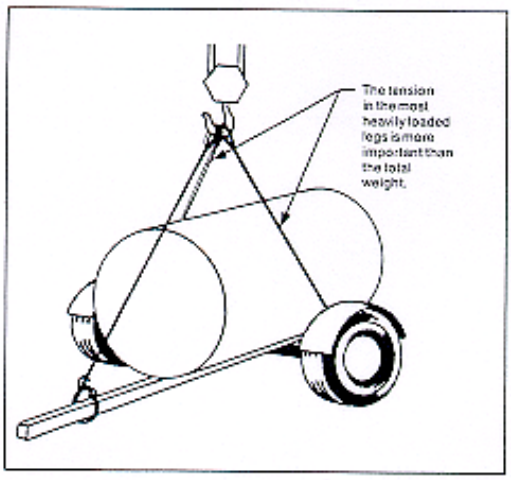

7.24 Earthmoving Equipment and Trucks

1. All earthmoving equipment shall be maintained in safe working condition and shall be appropriate and adequate for the intended use.

2. A written pre-shift safety inspection shall be performed on all equipment. Documentation shall remain in vehicle during the work shift. Equipment with identified safety defects shall be kept out of service until repaired.

3. Equipment shall be operated only by authorized personnel. Operators of equipment, machinery or vehicles shall be qualified and properly licensed for the operation involved.

4. Heavy equipment on an active construction project traveling on UDOT Rights of Way, shall be required to use lights, emergency flashers and flashing yellow overhead lights if traveling at less than posted speeds. Heavy equipment (non-legal loads) crossing travel lanes shall require the use of traffic slow downs, flaggers or other, as required by Section 01554 of the project specifications, with appropriate lighting for night time crossing.

Fig. 7.16

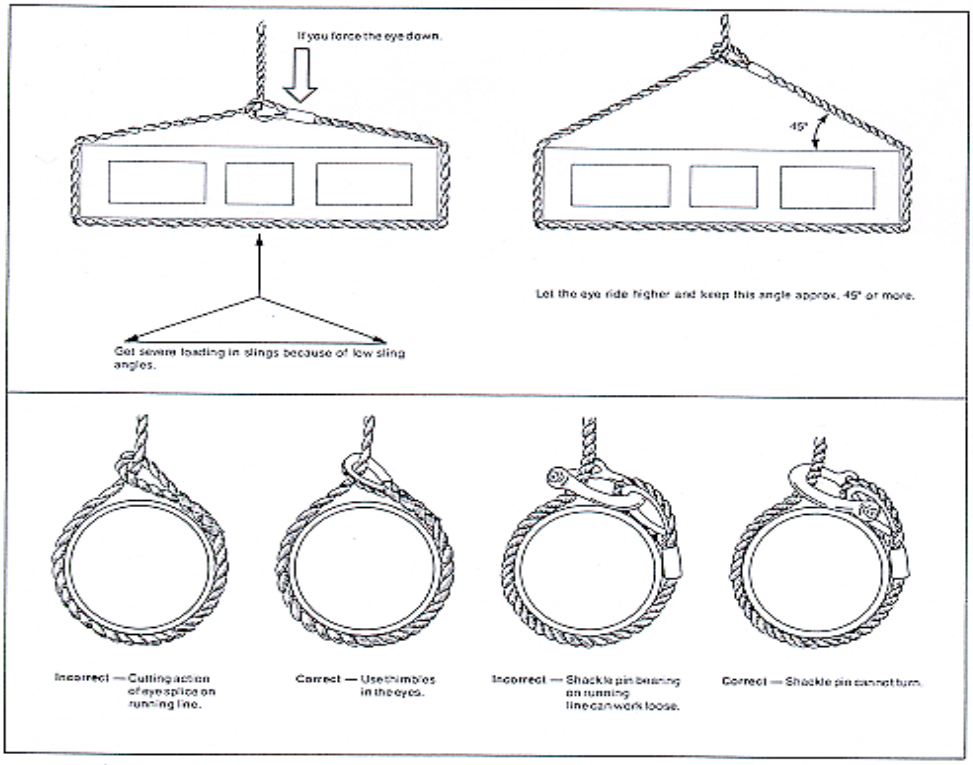

5. Equipment maintenance is to be performed only by qualified mechanics.

6. Equipment operators and truck drivers will make a documented pre-shift safety inspection of their equipment and any conditions that effect safe operation will be corrected before further use.

7. Equipment shall not be operated unless all required safety devices are in place and functioning properly. No distractive devices allowed for operators of heavy equipment, haul and delivery trucks on projects.

8. Careless, reckless or otherwise unsafe operation or use of equipment shall result in discipline and may constitute grounds for dismissal. Work on belly dump clam shells in, under, or anyway in harms way requires that the truck be shut off, the system de-energized with a manufactured approved restraint or blocking device.

9. Before performing any service or repair work, all equipment shall be stopped and positively secured against movement or operation, locked and tagged out of service, unless it is designed to be serviced while running, following the manufacturer's instructions.

10. When equipment is serviced or repaired, the operator shall dismount until the service or repair is completed and then makes a complete walk-around safety check before remounting.

11. All bi-directional earthmoving equipment and motor vehicles with an obstructed view to the rear shall be equipped with a warning horn and an automatic back-up alarm that can be heard above and distinguished from the surrounding noise level.

12. All off-highway earthmoving equipment and trucks, such as loaders, dozers, scrapers, motor graders, rock trucks, tractors, rollers and compactors shall be equipped with roll-over protective structures (ROPS) and seat belts. Seatbelt use is mandatory.

13. Seat safety belts shall be installed on and used by the operators of equipment provided with ROPS. One hundred percent seat belt use is mandatory.

14. Mobile equipment shall not be left unattended unless parked securely to prevent movement, with all ground engaging tools lowered to the ground, brakes set and the engine off.

15. Equipment parked at night shall be lighted, barricaded or otherwise clearly marked by the use of reflectors or reflective tape on all sides when used at any time within UDOT rights of way.

16. Personnel shall not be transported or ride on equipment or vehicles that are not equipped with seats and seat belts for passengers.

17. When fueling equipment or vehicles with gasoline or liquefied petroleum gas (LPG) the engine shall be shut down.

18. All equipment and vehicles shall be equipped with appropriate fire extinguisher or fire suppression system.

19. Haul roads shall be designed, constructed and maintained for safe operation consistent with the type of haulage equipment in use. Standard traffic control signs shall be used where necessary.

20. Elevated roadways shall have axle high berms or guards maintained on their outer banks.

21. Equipment, tools, and materials hauled on pickups and flat bed trucks must be secured to prevent them from falling onto the road.

22. Equipment, pickups and passenger vehicles not necessary for performing the work should be parked well away from the work area to reduce congestion and avoid collisions.

7.25 Hot Work

Hot work is any process, which because of its design or function can cause ignition of a gaseous of vaporous atmosphere due to direct or indirect contact. Examples include welding, cutting, burning, soldering, grinding, etc.

7.25.1 Responsibilities

All hot work must be planned and supervised by competent personnel to ensure that sufficient safety and health procedures are met.

7.25.2 General Requirements

1. No tasks that produce heat, sparks, or energy sufficient to serve as an ignition source may begin in any location that could potentially have ignitable atmospheres, until a JSA has been instituted and a Hot Work Checklist has been completed. (See appendix G)

2. All Hot Work Checklists must be reissued at the beginning of each day, each work shift, or if the area has not been monitored within 1 hour. Copies of permits must be kept on file and available for RE's review.

3. All welding and cutting equipment and operations shall be in accordance with standards and recommended practices of the American Welding Society, Safety in Welding and Cutting, ANSI Z49.1, and the recommendations of the NFPA.

4. Contact lenses shall not be permitted while welding or cutting.

5. Transformer-type electric welding apparatus shall comply with ANSI C33.2 and shall be installed, maintained, and operated in accordance with the NEC. Welders and generators used on UDOT projects must have a daily, pre-shift safety inspection completed before use.

6. Gas welding and cutting equipment shall be listed by Underwriters' Laboratories, (UL) Inc. Chicago, Illinois or by Factory Mutual Laboratories, Boston, Mass.

7. Employees shall be instructed in the safe use of welding equipment. Employees who have not received instructions shall not be allowed to use equipment.

8. All welding equipment shall be inspected daily. Defective equipment shall be removed from service, replaced, or repaired and re-inspected before again being placed in service. Each welding or cutting unit shall be equipped with a compatible fire extinguisher.

9. Compatible fire extinguishing equipment shall be provided in the immediate vicinity of the welding or torch operation whenever combustible material is exposed.

10. Proper precautions (isolating welding and cutting, removing fire hazards from the vicinity, providing a fire watch, etc.) for fire prevention shall be taken in areas where welding or other "hot work" is being done.

11. Objects to be welded, cut, or heated shall be moved to a safe location or, if they cannot be moved, all moveable fire hazards in the vicinity shall be taken to a safe place or the combustible material and construction shall be protected from the heat, sparks, and slag of welding by suitable screens.

12. The areas where the floor, walls, or ground cover are combustible should be protected by spraying the area with water, spreading damp sand, laying sheet metal, or by an equivalent means of protection. The contractor may have to assign a fire watch whenever welding in combustible surroundings.

13. Workers and the public shall be shielded from welding rays, heat, flashes, sparks, molten metal, toxic gases, toxic fumes, and slag.

14. Cable, hoses, and other equipment shall be kept clear of passageways, ladders, and stairways.

15. All hollow spaces, cavities, or containers shall be vented to permit the escape of air or gases before preheating, cutting, or welding. US Department of Transportation, Office of Pipeline Safety, 49 CFR Part 192, Minimum Federal Standards for Gas Pipelines, shall apply when welding, cutting, and heating on steel pipelines containing natural gas. Pipelines containing gases or flammable liquids or conduits containing electrical circuits shall not be used as a ground return.

16. When welding or cutting must be done in a location where combustible or flammable materials are located, inspection, and written authorization by the designated authority

shall be required before such operations are begun. The location shall be checked for latent fires after the work is completed.

17. Cylinders shall be kept beyond the range of sparks, hot slag, or flame.

18. Fuel gas and oxygen cylinders must be stored at least 20 feet apart or on opposite sides of a fire wall, outside the range of falling debris and away from heavy traffic areas when not in use.

19. Cylinders must be kept upright and secured.

20. Cylinder storage areas must be clear of combustibles, including fuels, and be designated as "No Smoking" areas. Proper placards should be used.

21. Compressed gas cylinders shall be stored, handled, and used in accordance with standards of the Compressed Gas Association. Cylinders should never be dropped, dragged, or struck in any way.

22. Positive mechanical and/or personal protective measures shall be taken when welding, cutting, or heating metals of toxic significance in enclosed spaces.

23. Oxygen shall not be used for ventilation, comfort cooling, blowing dust from clothing for pneumatic tool use, to start internal combustion engines, to blow out pipelines, to create pressure, to fill tires or for cleaning the work area. Pure oxygen is extremely dangerous. It can set fire to oil or grease without flame or spark.

24. Fuel gases such as propane and acetylene can be as dangerous as oxygen at pressures above 15 psi; in certain mixtures with oxygen acetylene can spontaneously explode. Propane, which is heavier than air, can accumulate below grade level and be ignited by sparks, pilot lights, and other sources of combustion.

25. Before welding, cutting, or heating is commenced on any surface covered by a preservative coating whose flammability is not known, a test shall be made to determine its flammability. Preservative coatings shall be considered to be highly flammable when scrapings burn with extreme rapidity.

26. Precautions shall be taken to prevent ignition of highly flammable hardened preservative coatings. When coatings are determined to be highly flammable, they shall be stripped from the area to be heated to prevent ignition.

27. In enclosed spaces, all surfaces covered with toxic preservatives shall be stripped of all toxic coatings for a distance of at least 4 inches from the area of heat application. Employees shall be protected by airline respirators.

28. In the open air, workers shall be protected against toxic preservative coatings by a respirator that meets requirements of NIOSH.

29. Preservative coatings shall be removed a sufficient distance from the area to be heated to ensure that the temperature of the un-stripped metal shall not be appreciably raised.

30. When the welding, cutting, or heating operation is such that normal fire prevention precautions are not sufficient, additional personnel shall be assigned to guard against fire and instructed in anticipated fire hazards and how fire-fighting equipment is to be used.

31. Flash arrestors must be installed within the fuel and oxygen lines on all gas-cutting cylinders. A flash arrestor, in the case of a flashback, will stop the flame from reaching the fuel source. Flash arrestors should be inspected every six months or after a flashback, which ever comes first. If flash arrestors appear clogged with carbon soot or discolored by heat they should be replaced. Most gauges have a built in "backflow" mechanizes that will prevent mixing of gasses but will not prevent fire from entering the gauges.

32. Hose which has been subject to flashback, or which shows severe wear or damage, shall be tested to twice the normal pressure to which it is subject but in no case less than 300 psi. Defective hose, or hose in doubtful condition, shall not be used.

33. No welding, cutting, or heating shall be done where the application of flammable paints, or the presence of other flammable compounds, or heavy dust concentration creates a hazard.

34. When burning or welding, employees must wear approved eye protection with suitable filter lenses. If employees' eyes are exposed to flying objects from chipping slag or other weld-cleaning activity, employees must wear approved eye protection. When employees arc weld near other workers, all employees must be protected from the arc rays by non-combustible screens or adequate eye protection.

35. In the open air, when welding, cutting, heating, burning metals have toxic significance, (such as zinc, lead, cadmium, or chromium-bearing metals); a filter-type respirator must be worn.

36. Never weld or burn on barrels, tanks, piping, or other system, which may have contained either combustible or unknown products without first properly purging and venting the container and obtaining approval from the appropriate Supervisor. The frames of all welding machines must be grounded.

37. All structural welding accomplished by the contractor on critical items such as scaffolding, shoring, forms, ladders, piling, etc., shall be performed by certified welders using qualified welding procedures.

7.25.3 HOT WORK CHECKLIST PROCEDURES

1. The Contractor Safety Representative is responsible for inspecting each site and determining the need for a Hot Work Checklist.

2. A fire watch is required for every activity where hot work could possibly result in other than a minor fire due to ignition of combustibles.

3. Fire extinguishing equipment commensurate with the ignitable matrix and training level of the fire watch must be immediately available at the Hot Work location.

   A combustible gas indicator (CGI) must be used to survey the Hot Work location and then must be left to constantly monitor the air between the flammable material and the immediate vicinity of the hot work when appropriate.

7.25.4 FUMES AND GASES

Hazardous fumes and gases can be released into the air during welding and cutting. As seen in the table below, some of these are released regardless of the material being cut. Other depend on the type of metal or its coating. The two hazards, which are considered most dangerous, are cutting through lead-based paint and cutting in the presence of degreasers. Cutting materials, which have been cleaned with a degreaser, or even in the vicinity of a degreasing operation, can produce deadly phosgene gas. Mechanical removal such as sandblasting or chemical removal such as paint stripping may be necessary to remove hazardous coatings before cutting.

1. Adequate ventilation must be ensured before starting any cutting job.

2. Cutting in enclosed spaces, such as tanks, tunnels, or small, closed rooms, demands particular attention to worker safety. A hazardous situation can develop because gases can easily replace oxygen or toxic fumes. If adequate mechanical ventilation cannot be provided, workers must be equipped with air supplied respirators and a lifeline which is constantly watched by an outside observer.

3. Cylinders must be kept outside the enclosed space and gases should be shut off at the cylinders when work stops for more than a few minutes.

4. A leaky hose or fitting in an enclosed space can easily result in an explosive or oxygen-deficient atmosphere.

5. Welding and cutting work on containers that have held combustible solids, liquids, gases or dusts can result in fire or explosion if the containers are not entirely free of these materials. It is important that a rigorous cleaning process be undertaken and that instructions for cleaning be rigidly followed. Containers, which have held any of the following materials, are considered dangerous, and hot work should not be started before they are properly cleaned and tested.

CHEMICALS THAT CAN RESULT IN COMBUSTIBLE AND/OR EXPLOSIVE ATMOSPHERES
Gasoline, kerosene, solvents, or light oil
Acids which react with metal and produce explosive hydrogen gas
Heavy oils, tars, or solids
Combustible solids
Residue from combustible metals such as magnesium

Any container, which has held combustibles, should be considered unsafe until proven otherwise by a qualified person. When in doubt, the container should be cold cut by mechanical means. An empty or partially full container is more dangerous than a full one as liquid burn; vapors explode.

TOXIC FUMES AND GASES PRODUCED BY CUTTING TORCHES	
Source	**Chemical Produced**
Cutting	Carbon Monoxide
Cutting and Welding	Ozone
Welding Rods	Fluorides
Acids	Hydrogen Gas
Chrome-coated fixtures	Chromates
Cadmium	Cadmium
Lead Pipe	Lead Oxide
Zinc	Zinc Oxide
Any material painted with lead-based paint	Lead Oxide
Any material which contained or was cleaned with degreasers	Hydrochloric Acid and/or Phosgene Gas

7.25.5 GAS EQUIPMENT

1. Keep all welding leads and gas hoses up off floors, walkways, and stairways or appropriately protect such leads and hoses.

2. Fuel gas and oxygen hose shall be easily distinguishable and shall not be interchangeable. Hoses shall be inspected at the beginning of each shift and be repaired or replaced if defective.

3. Do not use matches or cigarette lighters to light torches. Spark igniters must be used. Torches must not be used to light smoking materials. Employees must wear appropriate protective gloves.

4. When a crescent or special wrench is required to operate an acetylene cylinder valve, the wrench must be kept in position on the valve. Fittings must be forced.

5. General mechanical or local exhaust ventilation or airline respirators shall be provided as required, when welding, cooling or heating.

6. After removing the valve protection cap, the worker should stand to the side of the cylinder valve opening and "crack" the valve. "Cracking" refers to quickly opening and closing the valve to remove dust particles from the opening.

7. Cracking should not be done near other welders, cutters, or ignition sources.

8. The regulator must be attached according to the procedure outlined by the manufacturer.

9. Pressure regulators should be serviced and tested for accuracy on a regular basis.

10. Only regulators, which are approved, by either Factory Mutual or Underwriters Laboratories should be used.

11. Torch valves shall be closed and gas supply shut off whenever work is suspended.

12. The torch and hose shall be removed from confined spaces whenever work is suspended.

13. Only those torches and gas mixers approved by Factory Mutual or Underwriters Laboratories should be used. Torch valves and fittings should not be oiled or greased.

14. All oxy-acetylene or other fuel gas-oxygen combinations used in cutting or welding equipment shall have reverse-flow check valves between torch and regulator. Manifold systems shall have the reverse - flow valves installed at the manifold connections. All arrestors must be installed at the regulator of each cylinder.

15. Acetylene regulators shall not be adjusted to permit a discharge greater than 15 psig.

16. Oxygen regulators and fittings should never be oiled, greased, or cleaned with oily rags.

17. Connection of multiple sets of oxy-acetylene hoses to a single regulator on a single set of oxy-acetylene tanks may only be accomplished by installing a commercially available fitting approved by Compressed Gas Association (CGA) Standards and UL listed. The fitting shall be

installed on the output side of the regulator and shall have a built-in shut-off valve and reverse-flow check valve on each branch.

7.25.6 ELECTRIC ARC WELDINGS

The hazards encountered in electric arc welding are similar to those encountered in gas cutting and welding except gas related hazards are replaced by electrical hazards. The dangers of flying sparks must be guarded against, particularly near floor and wall openings where other works or combustibles may be hidden from view. PPE requirements are identical except that arc welders are required to wear a welding helmet.

1. Arc welding operators must be shielded by screens or curtains to protect others working in the vicinity.

2. Switching equipment for shutting down the welding machine shall be provided on or near the welding machine.

3. The non-current carrying metal parts of electrically powered welding machines shall be grounded. Grounding circuits, other than by means of the structure, shall be checked to ensure that the circuit between the ground and the equipment to be grounded has resistance low enough to permit sufficient current to flow to cause the over-current device to interrupt the circuit.

4. Neither terminal of the welding generator shall be bonded to the frame of the welder.

5. When electrode holders are to be left unattended, the electrodes shall be removed and the holder shall be placed or protected so they cannot make electrical contact with employees or conducting objects.

6. Pipelines containing gases or flammable liquids or conduits carrying electrical conductors shall not be used for a ground return circuit.

7. The equipment shall be shut down when the leads are unattended.

8. Cables should be inspected regularly for damage. Damaged insulation, conductors, or connections should be repaired or replaced to achieve the conductivity and water-tightness of the original cable.

9. Cables with splices or repaired insulation within 10 feet of the holder shall not be used.

10. Cables should always be kept dry and free of oil and grease.

11. Lengths of cable produce heat when in use, so cables should be neatly uncoiled before using to prevent damage to the insulation.

12. When the distance from the machine to the work varies considerable, the cable can be broken into lengths using connectors intended for this purpose.

13. When work is at a distance from the welding unit, cables shall be supported overhead. When this is impractical, they should be laid on the ground and protected from damage or the likelihood of causing an accident.

14. When in use, cables should be kept away from other power supplies or high voltage conductors.

15. Welding supply cables shall not be placed near power supply cables or other high-tension wires.

16. Welding leads shall not be permitted to contact metal parts supporting suspended scaffolds.

17. Lug covers shall be installed to protect both the positive/negative connections from accidental contact.

18. To minimize the danger of electric shock, suitable guards must be placed so as to prevent persons from accidentally contacting live electric circuits.

19. Whenever the machine is moved, the welder leaves the equipment or the work is stopped for an appreciable length of time, the power supply shall be disconnected.

20. Electrode holders must never be dipped in water for cooling purposes.

21. The welder shall protect himself from electrical contact with his work or other grounding structures at all times. This is particularly important when welder is in the prone or sitting positions when the potential for large area contacts is high.

22. The welder should never permit the live metal parts of an electrode or its holder to touch his bare skin or damp clothes. Cables that are draped over or wrapped around a worker's body can transmit dangerous amounts of current.

23. Circuits from welding machines used for other than welding tools shall be grounded.

7.25.7 INERT-GAS METAL-ARC WELDING

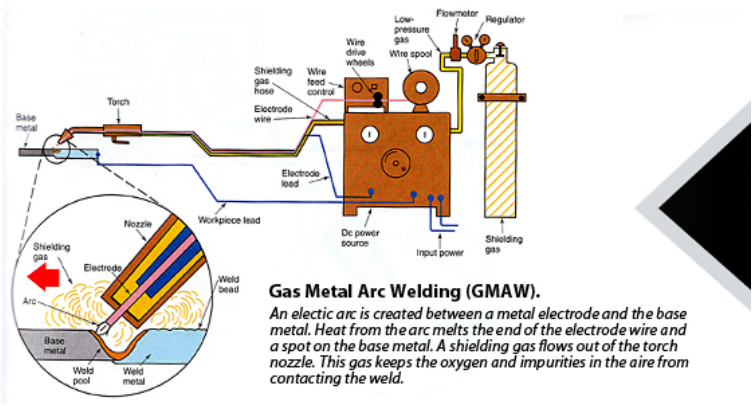

Gas Metal Arc Welding (GMAW).
An electic arc is created between a metal electrode and the base metal. Heat from the arc melts the end of the electrode wire and a spot on the base metal. A shielding gas flows out of the torch nozzle. This gas keeps the oxygen and impurities in the aire from contacting the weld.

1. All arc welding and cutting cables shall be completely insulated and be capable of handling the maximum current requirements for the job. There shall be no repairs or splices within 100 feet of the electrode holder, except where splices are insulated equal to the insulation of the cable. Defective cable shall be repaired or replaced.

2. Chlorinated solvents shall be kept at least 200 feet, unless shielded, from the exposed arc. Surfaces prepared with chlorinated solvents shall be dry before welding is permitted on such surfaces.

3. Filter lenses shall protect persons in the area not protected from the arc by screening. When two or more welders are exposed to each other's arc, filter lens goggles shall be worn under welding helmets. Hand shields to protect the welders against flashes and radiant energy shall be used when either the helmet is lifted or the shield is removed.

4. Welders and other persons who are exposed to radiation shall be protected so that the skin is covered to prevent burns and other damage by ultraviolet rays. Welding helmets and hand shields shall be free of leaks, openings, and highly reflective surfaces.

When inert gas metal-arc welding is performed on stainless steel, persons shall be protected against dangerous concentrations of nitrogen dioxide by local exhaust ventilation or airline respirators

7.26 VEHICLE IDENTIFICATION

All commercial vehicles of contractors or consultants of any tier, working within or on the UDOT Rights of way, must be clearly identified by company name.

8.0 EMERGENCY ACTION PLAN

8.1 General

This Emergency Action Plan (EAP) is a guide to plan for potential site evacuation and highlight certain project emergencies. The specific topics of this plan must be addressed in the project specific evacuation procedure. Each project/facility procedure may vary. Ensure that your and your employees are aware of these procedures. A site plan for each project may be required by the RE.

It may be necessary to evacuate the project site at any time of all Contractor employees, RE's staff and visitors. Evacuation causes may include: earthquake, fire, explosions or potential explosion; severe storms, hurricane, or tornado warnings; fumes, gas; electrical failures; or structural failures. The history of such happenings reveal a saving of life and property when an evacuation plan is effectively used.

Project plans and procedures will provide for the designation of a control center with an alternate. The control center will be located at a focal point of telephone and/or radio and intercom communications.

8.2 Supervisory Control and Responsibilities

1. In the event of an emergency, an alarm will be sounded by a supervisor from any Contractor or the RE's staff to alert the on-site workforce of the need to evacuate the project site.

2. An assembly area will be designated by each Contractor and the RE. Each evacuation manager is responsible for informing his employees of the location of their assigned emergency assembly area. Every Contractor and UDOT employee will proceed promptly to their assembly area in an orderly manner and reporting to his or her supervisor.

3. Each Contractor's Project Superintendent shall act as the evacuation supervisor for his company. The RE's Lead Inspector will be the evacuation supervisor for the RE's staff. In an emergency situation, each evacuation supervisor shall immediately proceed to the assembly area assigned by the Project Superintendent. Each Contractor will take a head count of his personnel in the assembly area and report to the RE's Lead Inspector who is present and who is missing.

4. The Prime Contractor will maintain a list of outside emergency services such as ambulance, hospital, doctors, fire department, police and other as may be deemed necessary to the called for assistance.

5. The RE's Lead Inspector will notify the UDOT Region Safety Risk Manager of any missing employees and the nature of the emergency and arrange to keep the Department regularly informed. Press releases must be channeled through the UDOT Communications Office. UDOT Communication Office will issue all press releases. No independent releases are to be given.

6. The RE's Lead Inspector shall act as liaison between the evacuation supervisors for each Contractor and the RE's staff.

7. Contractor supervisors responsible for mobile equipment shall determine whether the equipment shall remain where it is at the time of the emergency or be moved to a predetermined area. Each Contractor Project Superintendent shall make the final decisions on all equipment movement.

8. All Contractors supervisors shall report to evacuation areas, then stand by for instructions. They shall expedite the search for any missing employees as directed.

9. All Contractors supervisors shall make an accounting of their employees and report this to their respective managers. Names, employee numbers, and last known whereabouts of missing people shall be forwarded to the RE

10. Employees, upon hearing the evacuation signal, shall shut down all their equipment, stop smoking. Required personal protective equipment is to remain in use. Employees shall proceed quickly to their assigned assembly areas and shall remain there pending further instructions from their supervisor.

8.3 Facilities

1. <u>Alarms</u>

   There will be a recognized signal via horn, whistle, siren, or public address system which is audible to all. If there are any areas where the alarm cannot be heard, this condition will be corrected, with special provision made for remote work areas.

2. <u>Notices</u>

   Upon completion of the specific project area, emergency plan and procedure notices will be posted for the information of all project employees. An example of a notice is:

   EMERGENCY EVACUATION PROCEDURE: When the emergency signal consisting of repeated three (3) long blasts of the job whistle is sounded, all employees will immediately cease work, secure all equipment, and proceed directly to the designated assembly area (parking lot, change house, or other appropriate area) and remain there until further instructions are assigned by their supervisor.

8.4 Assembly Areas

1. Each employee must be assigned a definite location to which to proceed. The assembly areas will be located at strategic places, close enough to work areas for access, but far enough away from potential disaster areas to afford protection to personnel. Alternate areas will be considered in case of inclement weather and other possible conditions. Assembly areas will

provide a definite destination for an orderly evacuation, allow for grouping so that instructions can easily be conveyed to all, and expedite the search for missing persons.

2. Procedures will be established for an orderly shutdown of work with the sounding of the emergency warning signal. Equipment will be secured; burning, heating, gas system, and other potentially hazardous devices will be turned off. Personnel shall then proceed to the designated emergency assembly area.

3. After employees have reached the assembly area, each Contractor and RE Supervisor should proceed immediately to account for their employees.

4. Employees will remain in the assembly area pending instructions from their employer. Management supervision should inform employees with respect to the type of emergency and plans for the resumption or suspension of work.

8.5 Training

The Project's Emergency Action Plan (EAP) will be effective only if employees are aware of it. With infrequent use and employee turnover, it will be necessary to review this plan at least twice a year. The RE and all Contractors should include the EAP in their new employee orientation; it should be discussed in safety meetings.

8.6 Emergency Equipment

8.6.1 Survey of Equipment

The RE may include in the EAP a survey of needed emergency equipment. This emergency equipment may include: specialized rescue equipment, self-contained breathing apparatus, backup monitoring instrumentation, portable electrical generators, communications devices, flashlights, special clothing, emergency medical supplies and other needed materials to cope with a project emergency.

8.6.2 Location of Equipment

Emergency equipment will be placed at predetermined locations to provide optimum emergency use.

8.7 Inclement Weather

8.7.1 Thunderstorm Safety

1. Heavy rain, hail, lighting, high winds, and tornadoes may accompany a thunderstorm. For these reasons a thunderstorm can be very destructive. Since thunderstorms are difficult to foresee, it is important that employees be educated in the safety precautions to take in the event of a thunderstorm.

2. Employees should seek shelter indoors during a thunderstorm when possible. When indoors, it is important employees avoid contact with electrical appliances, conductive surfaces and structures.

3. If employees are outdoors, they shall remain lower than the nearest highly conductive object. Lightning will strike the easiest source to ground, not necessarily the highest. Conductive objects such as trees, telephone poles, crane booms, and flagpoles shall be avoided. A safe distance from a conductive object is twice the object's height. Lightning is a thunderstorm's worst killer.

4. Objects which may carry electric current from a remote thunderstorm should also be avoided. These objects would include telephone lines, pipelines and fences. An employee shall not use electric tools outdoors if a thunderstorm is in the immediate area.

5. The rains accompanying a thunderstorm may create flooding conditions. National Weather Bureau advisories shall be monitored by project safety for flash flood warnings. Employees should be instructed to avoid flood plains, drainage ditches, and dried creek beds when a flash flood warning is issued.

6. Employees must take certain precautions while driving during a thunderstorm. When poor visibility is encountered, the driver shall stop the vehicle until visibility improves. When lightning is in the immediate area, the employee shall seek shelter indoors, or remain in the vehicle away from interior metal parts. When high winds or flooding accompany the thunderstorms, the employee shall seek an appropriate protected area.

7. Employees shall not be permitted to work on cranes during a thunderstorm. In order to prevent damage or injury, cranes shall be grounded. If the crane is located on a barge or other vessel the crane shall be adequately bonded. The crane's boom shall be lowered when winds exceed approximately 30 miles per hour. Barges and other vessels shall be secured to a stationary source.

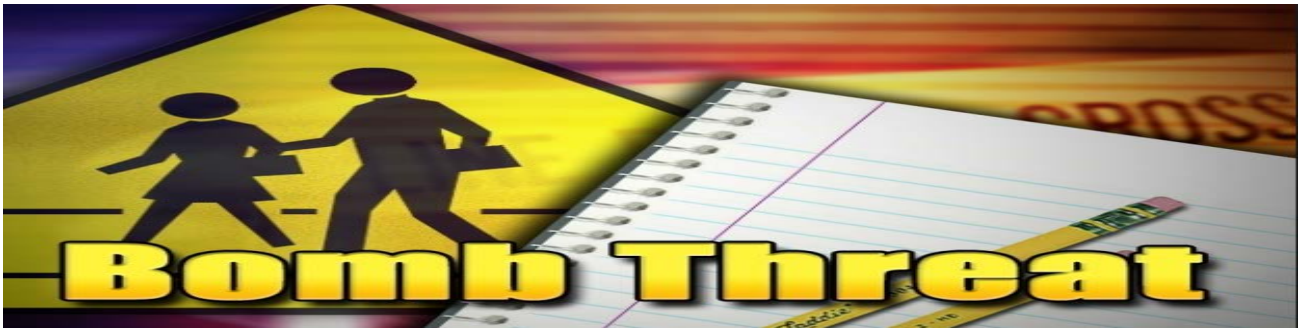

8.8 Bomb Threats

The purpose of this procedure is to provide guidance to all project employees to plan an appropriate reaction to bomb threats.

1. There are three types of bomb threats, as follows:

    a. *Actual Warning* - In which a bomb has been placed and a humanitarian notice is being given.

    b. *Harassment* - In which the goal is to disrupt project operations and/or impose economic hardship. In cases of harassment the instigator may be a disgruntled former employee or one with political, economic or ideological beliefs different from those of the project or the UDOT.

    c. *Hoax* - In which the instigator derives a sense of power from the confusion and excitement created. In other cases the motivation frequently is the desire for paid time off from work.

2. The receipt of a bomb threat at the project will require a quick assessment as to whether the threat is an actual warning, harassment or a hoax, and the appropriate call to action by construction management. This requires that advance provision be made for the immediate communication of any bomb threat to Project Employees. Upon reaching a decision after consideration and assessment, the prearranged procedure for the given situation is to be placed into action.

3. Organizational planning in anticipation of such an event is essential in handling bomb threats. In doing so, clear-cut levels of authority must be established. Only by using an established organization and procedure can bomb threats be handled with the minimum risk to persons and property.

4. The particular characteristics and conditions existing at each jobsite location will require that each area develop emergency procedures to meet the contingencies of the specific location. In some cases only a slight modification will be needed to accommodate the various project site locations.

8.9 Preparation/Planning

1. In order to determine which type of bomb threat applies and to afford the maximum protection for project employees and the project, it is essential that the RE and Contractor proceed with an immediate assessment of all factors and determine whether or not to evacuate a portion, or all, of the construction site.

2. Accuracy and a quick decision, based on these considerations, will be dependent primarily upon the accuracy and extent of the information concerning the call and caller issuing the threat.

3. The person receiving the bomb threat call should know the details of the Bomb Threat Incident Report, using it as a guide to the conversation. (see Attachment 8-2).

4. The RE is the individual to whom the operator is to report the threat. A designee will be provided to assure that at least one key management official is available at the project; and order of precedence for notification will also be established.

5. A comprehensive employee education program should be established. Every employee should have an adequate overview of just what precautions the company is taking in the event a bomb threat is received. In making employees knowledgeable of the planned safeguards, a panic situation usually will not occur. Panic is one of the most contagious of all human emotions. It is caused by fear-mostly fear of the unknown. Before and during a bomb threat, employees will be notified of this occurrence.

6. Notification of necessary fire, ambulance, and law enforcement agencies may be required. In preparation of the project procedure, contact should be established with the FBI, police and fire departments and other local governmental agencies to determine the following:

   a. Do fire or police departments have a bomb disposal unit?

   b. Under what conditions is the unit available?

   c. What is the telephone number for the unit?

   d. How can you obtain the services of the bomb unit in the event of a threat?

   e. Will the unit assist in the physical search of the site or will it only disarm or remove explosives?

7. It is of paramount importance that all inquiries by the news media be directed to UDOT's Communication Office spokesperson. All other employees are to be instructed not to discuss

the situation with outsiders, especially the news media. The purpose of this provision is to furnish the news media with accurate information and see that additional bomb threat calls are not precipitated by irresponsible statements from uninformed sources. Should it be determined that evacuation is warranted, the prearranged emergency warning system will be sounded and the project site evacuated in an orderly manner as described earlier in this section.

8.10 Project Management - Evacuation Considerations

1. The decision as to appropriate action should be based on the evaluation of the following items:

    a. Is the caller specific as to time?

    b. Is the caller specific as to location--particularly in a multiple building facility?

    c. Is the caller specific as to type of bomb?

    d. Does the caller seem to express honest concern over possible injury to people?

    e. Does the caller seem to be serious, sober and calling from a location other than one with a background noise that would be associated with a bar?

2. If (a) and (b) or (b) and either (c), (d) or (e) are affirmative, the indicated building(s)/structure(s) should be evacuated from at least 30 minutes before the stated time of the explosion (if given) until at least 30 minutes after that time. If time is not given, evacuation should be carried out for a period long enough for a search. If neither (a) nor (b) above is affirmative, evacuation is not recommended, but a discreet supervisory search should be carried out (such to be designated in advance). After any evacuation, re-entry should follow another supervisory search.

8.11 Telephone Procedures

1. Keep the caller on the line as long as possible. Ask the caller to repeat the message. Record, as completely as possible, words spoken by the caller.

2. If the caller does not indicate the location of the bomb or the time of possible detonation, you should ask for this information.

3. Inform the caller that the building(s) are occupied and the detonation of a bomb could result in death or serious injury to many innocent people.

4. Pay particular attention to peculiar background noises such as motors running, background music, and any other notice which may give a clue as to where the call is being made.

5. Listen closely to the voice (male, female), voice quality (calm, excited), accents and speech impediments.

6. Immediately after the caller hangs up, report to the person(s) designated by management to receive such information. Then complete the Bomb Threat Incident Report and forward by messenger to the management individual designated to receive this report.

8.12 Power Outage

If a severe power outage occurs, the project may have an emergency generator(s) and temporary lights available to place in areas at which lighting is critical.

Areas most likely to be adversely affected by a power outage, thereby creating a potential hazard to Project employees, will be identified in advance, and equipment and/or a procedure will be adopted to minimize the effect of this outage. Those work areas that cannot cope with a power outage shall discontinue operations until power is restored.

Attachment 8-1

EMERGENCY ACTION PLAN
(SUPPLEMENT)

Purpose
This supplement will act as an outline to assist in the development of a site specific Emergency Action Plan (EAP).

General
The Emergency Action Plan (EAP) is a guide to plan for site evacuation (attached) and should be referenced in addition to this supplement.

Site Specific Procedure
This supplement will act as the site specific Emergency Action Plan. This plan may further be supplemented by work conducted at an operating facility. _____ will act as the Team Leader in the event an evacuation of the project is necessary. If the _____ is not available he/she will designate either the assistant _____ to act as the team leader. The Team Leader or his/her designee will determine if all or part of the project should be evacuated.

The Control Center for the Plan will be _____ located at _____. If this location must be evacuated, the alternate control location will be _____, radio designation _____, mobile phone _____. At the direction of the Team Leader, emergency services will be contacted and the evacuation alarm will be sounded.

Alarms
(Until alarms are installed, the RE will contact field personnel by radio to evacuate the site.) The alarm method selected is a _____ alarm. This alarm will be sounded in the following manner to evacuate the site _____. The alarm(s) are located (see maps). Only trained members of the on site construction management team may sound the alarm. However, personnel on site will be briefed on the alarms and testing of these alarms will be conducted periodically.

Assembly Area(s)
Once the alarm has been sounded to evacuate the site, all work will cease, equipment will be turned off, and cranes will be unloaded. All personnel will proceed to the nearest assembly area by using safest route (see maps). At the assembly area, each employee will go to the specific area established by your department supervisor or contractors project manager. The department supervisors and contractors project managers will then report to the Team Leader the status of their personnel. Personnel will be instructed not to leave the site until accounted for and only after being released by the Team Leader.

The Team Leader has designated _____ to report to the alternate evacuation location (see maps) to assemble and account for those personnel. This person will report to the Team Leader the number of personnel assembled at the alternate site. If personnel are missing, the Team Leader will advise emergency services responding to the site as to the status of these individuals.

At no time will anyone re-enter the evacuated area until the Team Leader has given the "all clear" signal or directed team members to affect a search for missing personnel. (note: a flag or wind sock will be erected to assist with determining wind direction, in event of hazardous air borne material present).

Team Members
This unit will follow the direction of the Team Leader, each will have specific responsibilities as follows:

Sound the alarm _____. This person, at the direction of the Team Leader, will sound the alarm.

Main site entrance _____. This person will proceed to the main gate to stop any traffic from entering the site, stop personnel from leaving the site (unless so instructed), and direct emergency traffic. This member must stay in radio contact with the Team Leader.

Control Center Leader _____. This person will assist the Team Leader with telephones and radios.

Assembly Area _____. This person will conduct head counts of construction management personnel, accumulate numbers of personnel from the contractors, and maintain general control of the assembly area. Advise Team Leader of any conditions or situations in this area and numbers of reported missing personnel.

Alternate Assembly Area _____. This person will proceed (by the safest route) to the alternate assembly area. This person will take control of the area, take head count and report by radio to the Team Leader the number of personnel assembled at the alternate area.

The Team Leader will make a list of personnel reported, (RE and Contractors) verify that the personnel reported missing are not at one of the assembly areas.

Training
This policy and procedure will be reviewed regularly. When, and if changes are made, training of all personnel will be conducted, and changes will be distributed to on-site contractors. Semi-annual training is required whether changes are made or not.

When new employees arrive on site, the Emergency Action Plan will be reviewed with these employees. If they have responsibility as a team member, their name will be posted with the Emergency Action Plan.

All visitors to the site will receive a brief orientation of this plan.

Emergency Phone Numbers:
Emergency numbers will be posted near all telephones.

Contractors' Responsibilities:

1. Establish their own Emergency Action Plan designed to coordinate with this site plan.
2. Train all personnel and new hires and retrain semi-annually.

3. Establish areas of responsibilities and identify persons by name.
4. Immediately contact the RE of any event that may require his attention for evacuation.
5. Submit your Emergency Action Plan to RE.
6. Post the Emergency Action Plan in a place where employees can review it.
7. Assure that all cranes are unloaded and equipment is turned off.
8. Contractor will advise vendors and delivery personnel of this plan.

The Contractor is responsible for his employees and equipment for a safe, efficient evacuation. No high-speed travel by any vehicles will be allowed. Vehicles must not endanger personnel
Note: Specific instruction for the following items are outlined in the general plan:

1. Bomb Threats
2. Power Outage
3. Project Managements Evacuation Considerations
4. Thunderstorms

Attachment 8-2

BOMB THREAT INCIDENT REPORT

Who received call: _____ Date: _____

Time (AM/PM): _____ Location call received: _____

Origin of call: Local _____ Long Distance _____ Booth _____ Internal _____

Time caller hung up: _____ (AM/PM) _____

THE CALLER: (Try to hold caller on line and get all information possible)

Time bomb will explode: _____ Kind of bomb: _____

What bomb looks like: _____

How it is activated: _____

Where it is located (building or area): _____

Reason for placing bomb: _____

Exact words of caller: _____

Caller's name (if given): _____ Male: _____ Female: _____

VOICE: Child _____ Adult _____ Approximate age: _____

Attachment 8-2 (Continued)

VOICE CHARACTERISTICS

ACCENT OR DIALECT: Local _____ Not Local _____ Foreign _____

Regional Characteristics (Specify) _____ Other (Specify): _____

TONE: Loud _____ Soft _____ High Pitch _____ Low Pitch _____

Raspy _____ Other _____ Pleasant _____ Rational _____

Irrational _____ Calm _____ Angry _____

SPEECH: Coherent _____ Incoherent _____ Righteous _____ Emotional _____

Laughing _____ Fast _____ Slow _____ Distinct _____

Distorted _____ Stutter _____ Nasal _____

LANGUAGE: Excellent _____ Good _____ Poor _____ Cursing _____

BACKGROUND NOISE

Factory Machines _____ Office Machines _____ Bedlam _____ Music _____

Mixed _____ Street Traffic _____ Trains _____ Animals _____

Quiet _____ Voices _____ Airplanes _____ Party Atmosphere _____

SPECIAL NOTE: Did the caller appear familiar with Project locations by his or her description of the bomb location? Write out the message in its entirety and any other comments on a separate sheet of paper and attach to this checklist.

9.0 ENVIRONMENTAL CONSIDERATIONS

9.1 General

This section is established to provide general guidance and allow each Contractor to manage operations which have some degree of potential to cause environmental damage. This damage may result because of a ruptured fuel tank, improper storage of paints and solvents, improper handling of hazardous waste, e.g., asbestos, or some other accident that may foul the worksite(s) and/or the surrounding area.

9.2 Scope

This procedure will apply to all Contractors operation to assure that hazardous materials associated with normal construction are managed, and environmental damage does not occur. If the RE observes non-compliance with the requirements of this section he/she will inform the Contractor Superintendent. The RE will prepare a safety deficiency report if needed and provide it to the Contractor and request correction be made. The Contractor is responsible with this section.

9.3 Contractors

The on-site Contractors are responsible for the following requirements:

1. Follow existing procedures for the procurement, receipt, storage and handling of hazardous materials under their control.

2. Train their employees to control the identified waste and recyclable products in the containers provided.

3. Maintain Material Safety Data Sheets (MSDS) on file for their hazardous chemicals.

4. Determine the nature of the health hazard of hazardous materials removed from the project site. Store and dispose of the materials in accordance with federal, state and local regulations.

9.4 Supervision and Management

Contractor supervision and management are responsible for the following:

1. Provide supervision to ensure that materials discussed in the section are not handled and disposed of in a manner contrary to the established procedure.

2. Ensure that employees follow all of the requirements incorporated within the MSDS.

3. Ensure that equipment for emergency action are in place to provide quick assistance and minimize employee risk.

4. Ensure that materials are stored and transported in accordance with federal, State, and local regulations from the warehouse or supply area to the waste container area.

9.5 Employees

Employees are responsible for:

1. Labeling secondary containers and subsequent containers of chemicals.

2. Using chemicals in a manner consistent with the MSDS and the manufacturer's recommendations.

3. Using correct personal protective equipment in accordance with the hazard analysis, MSDS, or other procedural requirement.

4. Notifying supervision if they are in doubt as to the proper handling or management of hazardous materials.

9.6 Storage of Chemicals and Fuels

Each Contractor shall provide the RE with a plan as to where all hazardous chemicals and fuels storage tanks and containers will be located. This plan will include all safety and health precautions to be implemented to maximize safe handling and storage of chemicals and fuels. This plan and the location requested by the Contractor must be approved by the RE prior to bringing chemicals and fuels onsite.

1. Flammable and Combustible Liquid Container: Only approved containers and portable tanks shall be used. Metal containers and portable tanks meeting the requirements of and containing products authorized by Chapter 1, Title 49, of the Code of Federal Regulations (DOT Regulations, NFPA Standard No. 30 and the local Uniform Fire Code (UFC).

2. Inside Storage Facilities on Site: Inside storage facilities must be designed and constructed in accordance with NFPA 30 - 1984 and the Uniform Fire Code (UFC).

3. Outside Storage for Containers Under 60 Gallons: The Contractor must contact the RE concerning new regulations or changes involving outside temporary flammable and combustible liquid storage facilities on site. A diagram of the containment method to be

used shall be submitted to the RE and must be reviewed and accepted prior to material being brought on site. The Contractor planning or having an outside storage facility must obtain a SIG. The SIG refers to design criteria for outside storage facilities in accordance to NFPA Guidelines 1984, and the local Uniform Fire Code (UFC). The mentioned standards and codes must be used in the design of the outside flammable combustible liquids storage facility (containers under 60 gallons). A 10:ABC fire extinguisher must be located no more than 25 or less than 10 feet from the storage area.

4. Temporary Above Ground Fuel Storage Tanks in Excess of 60 Gallons: The Contractor must contact the RE when operations required to have on site a temporary above ground fuel storage tank in excess of 60 gallons.

9.7 Spill Control Definition and Control

1. Waste Disposal and Minor Spills: A minor spill is a condition that does not present potential harm to personnel and/or the environment, and the Contractor has the ability to immediately control and clean-up the spill and the spill is less than 25 gallons (quantity may be less based on toxicity refer to MSDS). Action to control non-emergency spills involve the following activities from the Contractor:

   a. **Immediately** contact the RE and implement the Spill Notification Procedure.

   b. Have on hand a trained individual to respond to critical events involving spills.

   c. Have available contingency clean up equipment to handle non-emergency spills (absorbent materials, personal protection equipment, compatible empty container to store spilled material, fire extinguisher, etc.)

   d. Spilled liquids or solids are to be properly contained in a compatible container and stored on-site until proper disposal action is taken at the time of the spill as required by State and Federal Requirements. When a spill occurs or when hazardous wastes are generated the Contractor will fill out a hazardous waste label and establish an accumulation date. The Contractor can maintain waste materials and non-emergency spills up to 55 gallons (approved container) no longer than 90 days from the accumulation start date.

   Enclosed in Appendix B is a listing of hazardous waste haulers of which should be contacted well in advance to the 90 day accumulation expiration date. When the disposal company or hazardous waste hauler picks up the Contractor's waste materials, a Uniform Hazardous Waste Manifest must be obtained by the Contractor and the Construction Manager must receive a copy of the manifest.

e. At the time of an accidental spill, the Contractor will also complete the "Emergency Release Follow Up Notice Reporting Form **prior to the contaminated material leaving the site.** The completed form must be submitted to the RE.

2. Emergency Spills: If the spill presents a potential for harm to personnel, public or the environment, the Contractor is not able to immediately control and clean-up the spill and/or the spill exceeds the reportable quantity (25 gallons or based on guidance from the RE), the Contractor or the RE will take the following action:

a. Notify the RE and the UDOT Region Safety Risk Manager to determine if the quantity or severity of the spill warrants outside assistance by emergency services (again, this is to ascertain the toxicity, size of spill and if the spill could enter a sewer or storm drain line).

b. If the spill is clearly an emergency spill condition and the RE or the UDOT Region Safety Risk Manager requests outside assistance, notify the UDOT Hazardous Materials Emergency Response Team 911.

Notify the UDOT Hazardous Materials Management Program

c. An incident report will be submitted within 24 hours to the RE. The UDOT Region Safety Risk Manager will review the report and if necessary hold a post incident meeting with the Contractor.

The same procedure for hazardous waste removal under State and Federal Requirements Title 22 Section 66262.34 (a) and the completion of the Emergency Release Follow-Up Notice Reporting Form must also be finalized by the Contractor with copies to the RE.

9.8 Hazardous Waste and Documentation.

Each Contractor is responsible for all required hazardous waste management which includes but is not limited to the transportation, storage and disposal at a hazardous waste disposal facility. The RE and the UDOT Region Safety Risk Manager will monitor all environmental issues at the job site. Non-compliance to spill containment controls will be communicated to the Contractors by the UDOT Region Safety Risk Manager for immediate corrective action.

The Contractor must obtain a licensed waste hauler to remove known wastes (liquids, solids). It is recommended that the Contractor use a State Certified Hazardous Materials Lab when necessary to identify an unknown spill material. Identifying the type of spill material or liquid containment can save the Contractor from increase costs for disposal if the material to be removed is known.

9.9 Abrasive Sandblasting

1. Purpose

   To establish minimum requirements for all Projects Contractors to perform outdoor abrasive sandblasting operations.

2. Scope

   This procedure applies in its entirety to all Projects unless a variance from its requirements is granted by the RE.

3. Responsibilities

   The Contractor Shall:

   a. Prepare a Job Safety Analysis (JSA).

   b. Evaluate all safety and health exposures.

   c. Train affected employees.

   d. Post appropriate warning signs.

   e. Ensure over spray from blasting operations does not affect the safety, health and well being of other contractor personnel.

4. Definitions

   a. **Shall:** The word "shall" is to be understood as mandatory.

   b. **Abrasive Blasting:** The forcible application of an abrasive to a surface by pneumatic or hydraulic pressure, or by centrifugal force.

   c. **Particulate Filter Respirator**: A negative pressure air-purifying respirator (APR) which removes dusts or fumes from air by filtration.

   d. **Supplied Air Respirator:** A device consisting of a face piece, helmet, or hood to which clean air is supplied to the wearer through a hose.

   e. **PEL:** - Permissible Exposure Limits.

   f. **CFR:** - Code of Federal Regulations.

5. General Requirements

a. All outdoor sandblasting operations must comply with all Federal, State and local regulations.

b. Operators of abrasive blasting equipment shall be instructed in the proper use and maintenance of equipment.

c. Respiratory equipment shall be selected, used, and maintained in accordance with OSHA requirements for Respiratory Protection.

d. Field abrasive sandblasting operations shall require an isolated work area with warning signs and barricades. Significant dilution of the respirable dust generated at the sandblasting nozzle will occur almost instantaneously within approximately 2 feet of the nozzle (dependent upon wind, speed, nozzle pressure etc.). This dilution is caused primarily by the dissipation of the momentum of air coming out of the sandblasting nozzle through turbulent free jet mixing. Isolation will help ensure that neighboring work personnel are not exposed at or above the PEL.

e. The abrasive blasting agent (e.g., sand) shall contain the lowest amount silica/quartz available, and must be certified by the UTAH Air Resource Board in accordance with any and all requirements.

f. Abrasive materials shall not be permitted to accumulate. Accumulated dust shall be promptly removed.

g. Blast cleaning nozzles shall be equipped with an operating valve which must be held open plainly and will shut off automatically when released by the operator (dead-man switch). A support shall be provided to mount the nozzle when not in use. All hoses shall be secured at each in line connection with tie wire and whip checks.

h. Only compressors designed specifically to supply breathing air shall be used to provide air to supplied-air respirators.

i. All air compressor equipment shall be provided with high temperature alarms and similar warning devices to assure carbon monoxide (CO) is not introduced into the system.

Note: Carbon monoxide (CO) can be present in the system from a malfunctioning breathing air compressor or from poorly located air intakes.

j. All filters on breathing air compressors shall be maintained in accordance with the manufacturers recommendations.

k. Where air compressors are equipped with a receiver tank, the tank shall be in compliance with local pressure vessel requirements.

l. When bottled compressed air is used as a source of breathing air, the air quality shall be Grade D, or better. Certification of air quality shall be obtained from the supplier prior to using compressed breathing air. Only compressed ambient air shall be used. Mixed or blended air is not acceptable and shall not be used.

6. Implementation

The following table summarizes the current PEL's for the different types of Crystalline Silica Dusts:

	SILICA TYPE	PEL/TLV
1.	Quartz	0.1 mg/m^3, Respirable Dust
2.	Cristobalite	0.05 mg/m^3, Respirable Dust
3.	Silica, Fuse	0.1 mg/m^3, Respirable Dust
4.	Tridymite	0.05 mg/m^3, Respirable Dust
5.	Tripoli	0.1 mg/m^3, Respirable Quartz Dust

Contaminants from the surface coating of the object(s) being cleaned (such as lead, and cadmium) may be introduced into the breathing zone when sandblasting and should be evaluated. A competent person shall make an evaluation of these potential hazards and required protective controls when surface coatings are known, or suspected to contain hazardous components. Representative air samples taken by the contractor may be required to determine all potential air contaminants.

Such sampling results shall be submitted to the RE.

a. **Permissible Exposure Limits:**

The Permissible Exposure Limit (PEL) for silica is based on the fraction of crystalline quartz in the respirable component (particle size less than 10 microns) the present Occupational Safety and Health (OSHA) PEL is 0.1 mg/m^3.

b. **Monitoring:**

- Indicators that an evaluation of employee exposure should be undertaken include:

  - Information or observation which would indicate employee exposure to silica, lead, cadmium, carbon monoxide or other substances.

  - Complaints of airborne silica, or other contaminants.

- Employee complaints of symptoms which may be attributable to exposure to silica or other substances, such as lead, cadmium, carbon monoxide.

- Production, process, or control changes which may result in an increase in the airborne concentration of silica, or whenever there is any reason to suspect an increase in the airborne concentration of silica.

- Employee exposure monitoring shall be performed according to the procedures published in the OSHA Technical Manual, Chapter 1. The recommended standard method for determination of respirable silica exposure is collecting breathing zone samples with a 10-mm nylon cyclone to separate the larger non-respirable fraction, followed by the collection of the respirable material on a 37-mm membrane filter. The membrane filter material can be analyzed for crystalline silica by infrared (IR), X-Ray diffraction (XRP), or spectrophotometer means.

  Additional sampling and analysis may need to be performed for substances other than silica such as lead, cadmium and carbon monoxide.

c. **Training:**

- Each employee who may potentially be exposed to silica, or any other hazardous substances, shall be informed at the beginning of his or her assignment to such an exposure area of the hazards, relevant symptoms, appropriate emergency procedures, and proper conditions and precautions for safe use or exposure. This indoctrination process shall be documented prior to the start of work. Copies of such indoctrination shall be made available to the RE upon request.

- Affected employees shall be instructed to advise the company of the development of any signs and symptoms of prolonged exposure to silica and other hazardous substances. (e.g., lead, cadmium, carbon monoxide).

- All employees shall be informed of the specific nature of operations which could result in exposure to silica or other substances (e.g., lead, cadmium, carbon monoxide) above the permissible limits, as well as of the safe work practices for the handling, use, or release of silica (or other applicable hazardous substances).

- Employees shall be informed of the types and functions of engineering controls.

- Employees shall be instructed in proper housekeeping practices in accordance with 29 CFR 1910.22 (a), 1910.141 (a)(3), 1910.106 (e)(9), 1910.176 (r), 1910.25, and all other applicable Federal, State and Local regulations.

- Employees shall be instructed as to the purpose, proper use, and limitations of respirator in accordance with 29 CFR 1910.134 and ANSI 88.2 Practices for Respirator Protection.

- Employees shall be informed where written procedures and health information are available for their review on the premises. Employees shall be advised of the increased risk of impaired health due to the combination of smoking and silica dust exposure.

d. **Engineering Controls:**

- Moisture, mists, fogs, etc., should be added where such addition can substantially reduce the exposure to airborne respirable silica dust.

- Adequate measures shall be taken to ensure that any ambient particulate discharges will not produce health hazards to others working adjacent to the blasting operations. All operations shall be in compliance with applicable local, state and federal clean air standards.

- When mobile equipment is operated in areas of potential contaminant exposure, engineering controls shall be provided to protect the operator from such exposure.

e. **Personal Protective Equipment:**

Engineering controls shall be used to maintain silica dust exposure (as well as any other potential contaminant exposure) below the PEL. When this limit cannot be met by engineering and administrative controls, then a program of personal protection including a Respiratory Protection Program shall be used to protect all potentially exposed employees.

- **Respirator Selection and Usage:**

  - All employees using negative air respirators shall be evaluated by a physician to determine the ability of the worker to wear a respirator.

  - Respirators specified for use in higher concentration of airborne silica may be used in atmospheres of lower concentrations.

  - All personnel involved in the operation of the sandblasting equipment shall wear Type C, continuous flow, supplied-air, and positive pressure, demand type respirators with hood or helmet. All personnel not directly involved in the operation must be restricted from the area, appropriate barriers, signage and demarcation shall be used. Note: Pot tender exposure must be evaluated before appropriate respirator protection can be chosen.

  - An appropriate respirator shall be selected from the following table and provided to employees.

- The blasters shall wear in addition to Type C continuous flow, supplied air respirator with hood as helmet, heavy canvas or leather gloves and aprons (or equivalent protection) to protect them from the impact of abrasive.

- Safety shoes are recommended to protect against foot injury.

- Adequate hearing protection shall also be utilized in accordance with 29 CFR 1910.95 (c), 29 CFR 1926.101.

Recommendations for Respirator Usage at Airborne Silica Concentrations Above the Permissible Exposure Limit (PEL)

Airborne Silica Concentration	Respirator Type*
Less than or equal to 10x the PEL	Half mask respirator with replacement high efficiency particular air filter (HEPA). Type C, supplied-air respirator, demand type (negative pressure), with full-face piece.
Less than or equal to 100x the PEL	Full-face piece respirator with replaceable HEPA filter. Type C, supplied-air respirator, demand type (negative pressure), with full-face piece.
Less than or equal to 3000x the PEL	Powered air-purifying (positive pressure) respirator, with replaceable (HEPA) filter.
Greater than 3000x the PEL	Type C, supplied-air respirator, continuous flow type (positive pressure), with full-face piece, hood, or helmet.

* *Only Type C supplied-air positive pressure, demand type respirators with full-face piece, hood or helmet shall be used by the blaster. It may be necessary depending upon ambient concentrations of contaminants. Without quantification of airborne contaminants Type C, supplied-air, continuous flow type respirators shall be used. Such protection must also be necessary for all adjacent personnel in the immediate vicinity or blasting operations. Depending upon the ambient concentration of contaminants.*

f. **Personal Hygiene Facilities and Practices:**

All food, beverages, tobacco products, non-food chewing products, and unapplied cosmetics are prohibited in blasting work areas. See section (g) below for additional housekeeping practices.

g. **Housekeeping:**

- All employees shall be instructed in proper housekeeping practices in accordance

with 29 CFR 1910.22 (a), 1910.141 (a)(3), 1910.106 (e)(9), 1910.176 (r), and 1910.25.

- All exposed surfaces shall be maintained free of accumulations of silica dust, and other contaminants which, if dispersed, would result in airborne concentrations in excess of their PEL.

- Dry sweeping and the use of compressed air for the cleaning surfaces contaminated with blasting residue are prohibited.

- If vacuuming is used, the exhaust air shall be properly filtered to prevent generation of airborne respirable silica and other contaminants.

- Gentle wash down of surfaces is preferable.

- Emphasis should be placed on preventive maintenance and repair of equipment, proper storage of dust producing materials, and collection of dusts containing silica, and other contaminants.

h. **On-Site Work Areas:**

- If abrasive blasting is performed without an enclosure, adequate respiratory protection shall be provided for all employees in the area. Portable engineering control devices should be used at the location to collect all the used abrasive agents as it is applied when feasible.

- If wet blasting is employed, airborne dust hazards will exist after the evaporation of water. Contingencies shall be made to address such situations.

- When airborne abrasive blasting dust becomes sufficiently heavy in an area to cause a temporary safety hazard by reduced visibility, or a marked discomfort to the unprotected employees not engaged in abrasive blasting, such operations in the affected area shall be discontinued until the airborne dust has been removed from the horizontal surfaces in the area. If such operations must continue, appropriate respiratory equipment shall be provided to those employees remaining in the area, providing viability is adequate.

i. **Confined Space:**

- A confined space is a compartment, tank or similarly enclosed space in which abrasive blasting, or a pre-existing atmosphere, may cause the employee to be overcome by conditions hazardous to life and where egress may be difficult if normal body functions are impaired. Confined spaces can subject personnel to the accumulation of toxic or flammable contaminants, contain physical hazards, or have an oxygen deficient atmosphere.

- Confined spaces include but are not limited to, the following: Storage tents, underground utility vaults, sewers tunnels, pipelines and open top spaces more than 4 feet in depth such as pits, excavations vaults and vessels.

- Individuals working within confined spaces shall comply all applicable Confined Space Entry (CSE) regulations

j. **Confined Space Blasting Procedures:**

- All access hatches, trap doors, etc., should be opened before work is started to aid natural ventilation.

- Mechanical ventilation should be used, picking up air a the furthest point away form the opening if natural ventilation will no cause a complete air change per minute.

- The other potentially hazardous materials present, such as solvents, crusts of chemicals, or old paint, shall be considered with regard to explosion or fire potential when blasted.

- A "buddy system" shall be used for each employee inside a confined space, and another employee shall be available to assist in a potential emergency.

- A self-contained breathing apparatus (SCBA) or air-supplied hood shall be utilized for respiratory protection when necessary.

- Adequate lighting that meets the requirements of the National Electrical Code (NEC), Article 502, shall be utilized.

- If the space is mechanically ventilated, means should be provided to collect dust before release to the open atmosphere.

k. **Records**

Employee exposure records created as a result of this procedure shall be retained for the duration of the employee's employment, plus thirty years. Copies of all records shall be submitted to the RE and UDOT Region Safety Risk Manager upon request

10.0 FIRE PROTECTION AND PREVENTION

10.1 General

An uncontrolled fire can be devastating to the Project and could pose a serious threat to the employees working here. All personnel must do their part to assure that a fire emergency does not occur.

10.2 Housekeeping

All personnel must follow good housekeeping practices. If anyone observes an undue large amount of: paper, scrap lumber, rags, oil, grease, solvents or other waste products, that could easily create a large fire from the hazards of day-to-day operations, that person must report this condition to the Contractor responsible for the area.

10.3 Fire Fighting Equipment

Personnel must assure themselves that they are knowledgeable with the location and use of portable fire fighting equipment.

Type ABC extinguishers must be located within 50 feet of each and every work or storage area.

A check should be made monthly to assure that portable fire fighting equipment is free of defects and available for prompt use, not blocked by equipment and/or materials.

10.4 Fire Emergency Telephone Number

The fire emergency telephone is "911". This number is posted at the Project field buildings and must remain posted and conspicuous during the life of the Project.

10.5 Fire Fighting Agency Action

The RE or designee should contact the local fire fighting agency and advise them of the Projects location.

During the course of construction, the RE should ask the local agency to revisit the Project. This revisit will allow fire-fighting personnel to remain cognizant of the stage of construction and to review the various routes of entry to the Project in the event of a fire emergency.

Project roads must remain open and available for fire emergency vehicle traffic. The RE will be notified in the event operations or equipment blocks the road(s) to outside emergency vehicles.

10.6 Liquefied Petroleum Gas (LPG)

If the RE or the Contractor uses LPG at the Project site, storage tanks will be located with due consideration for adjacent Project building, operations and property boundaries.

The LPG vendor must be advised of conditions which might pose a hazard to the safe storage of LPG tanks.

National Fire Protection Association (NFPA) No. 51 should be reviewed in detail as a guide information document for placement of this equipment.

11.0 LEAD PROTECTION

The following represents guidelines for UDOT's program for minimizing employee exposure to lead: (reference OSHA 1926.22)

11.1 IDENTIFYING/SAMPLING FOR LEAD HAZARDS

The contractor could be exposing its employees to lead hazards when work involves activities like cutting, burning, grinding, removing, scraping coated materials and housekeeping (sweeping). **BEFORE** any activity begins, projects must take measures to identify the presence of lead on painted surfaces.

1. Use existing test documentation from the owner to see if lead is present on the painted surface.

2. Test the coated area with a Lead Check (Trade Name), or equivalent, to see whether or not lead is present. This is a quick test for lead and shall not be used alone in determining if lead is present unless results are positive.

3. Take a representative sample of the coated material and test for lead and PCB's (also cadmium if suspected). Contact the UDOT Construction and Materials Chemist with any questions about sampling.

4. Test soil and sediment samples around the work area as required or necessary to establish a base line to verify a known or suspected presence of lead or other contamination.

11.2 PLANNING FOR LEAD EXPOSURE

Managing a lead hazard means the project must plan for the potential employee health and environmental impacts before the work begins. Each lead activity must be addressed in a job-specific activity plan with a primary focus on eliminating/minimizing the lead exposure. Each activity plan must address employee medical surveillance, personal protection, safe hygiene practices/controls, environmental controls, engineering controls, work practice controls, training, lead waste disposal and the identification of a competent person (Appendix J).

11.3 ESTABLISHING JOB SPECIFIC WRITTEN LEAD PROGRAM

Establish and implement a job specific written lead protection program incorporating this policy and completing the activity plan lead section including:

1. A description of each activity in which exposure to lead is expected; e.g. equipment used, material involved, controls in place, crew size, employee job responsibilities, operating procedures, maintenance practices and a competent person.

2. A description of the specific means that will be employed to achieve compliance and, where engineering and work practice controls are required to reduce exposure levels below the PEL, document plans and studies used to determine methods selected for controlling exposure to lead.

3. A description of the technology considered in attempting to reduce the exposure levels below the PEL when feasible (ventilation, filtering, respirators, containment). Document reasons why some controls available are not feasible or possible to do.

4. Monitoring data that documents the source of lead emissions.

5. A detailed schedule for implementation of the program, including documentation such as copies of purchase orders for equipment, construction contracts, etc.

6. Provide written notification to vendors and subcontractors (i.e., salvage dealers) when materials containing lead base paint coatings are sold/given to them.

7. A work practice program that includes protective work clothing and equipment, housekeeping and hygiene facilities/practices and incorporates other relevant employee work practices.

8. Provide, when feasible, administrative controls schedule for employees minimizing the time spent working in lead area.

9. Hazard and solution identification documented in the activity plan(s) and conveyed to all employees working in the lead control area(s).

10. Regular and frequent inspections by the competent person.

11. Method of informing other contractors and subcontractors of potential lead exposure if applicable.

11.3.1 Lead Training

Before any activity involving potential lead contamination and exposure begins, the Contractor's employees must receive job-specific training in the following areas:

1. Review activity plan in regards to lead exposure/handling and hazards/solutions.

2. Specific activities that could result in exposure to lead and lead exposure levels (if known) for the work activities.

3. Health hazards associated with lead exposure.

4. Proper use, wear, care, and maintenance of protective clothing and equipment including respirators.

5. Engineering/administrative work practice controls needed to minimize lead hazards.

6. Purpose of medical surveillance and employee rights concerning this information. Discuss requirements concerning warning signs.

7. Review content and appendices of OSHA Occupational Safety and Health Standards, (section 1926.62 Lead).

8. Proper handling of lead contaminated materials and waste.

9. No chelating agents to be used except under direction of a licensed physician.

10. Employee rights to access exposure and medical records (CFR 1910.20).

    a. Explain existence and location of records.

    b. Person responsible to maintain and provide access to records.

11.3.2 Eliminating/Minimizing Exposure

1. The first step in lead activity is determining whether the hazard can be eliminated or encapsulated. If feasible, can the lead coating be removed before working on the surface (blasting coating off-site, chemical stripping, etc.)?

2. If a hazard cannot be eliminated, the next step is to minimize it. This can be done through engineering, administrative and work practice controls such as work isolation, job rotation, mechanical ventilation, increased torch length, and alternative removal methods. If administrative controls are used, (i.e. job rotation), a log of the rotating employees (name, duration/exposure levels/activity, etc.) must be kept on site and with the activity plans.

3. REMEMBER**,** if the hazard cannot be **eliminated** and the levels exceed the PEL (50 ug/m3), the lead work area must be clearly marked and posted with signs. UDOT recommends posting signs for all lead work areas reading:

"WARNING
LEAD WORK AREA
POISON
NO SMOKING OR EATING"

11.3.3 Exposure Assessment and Air Monitoring

1. Supervisors working with lead coatings must plan and develop safeguards to protect against exposures resulting from outside elements (wind, temperature) and work location (indoors, outdoors, over water, over workers, near public areas, etc.). Containment plans, should they be needed, must be project-specific and meet the needs of the people in the work area. The Region Safety Risk Manager is available to help develop containment plans if deemed necessary by the competent person.

2. Each work activity (burning, welding, rivet busting, scraping, etc.) must be monitored to determine the levels of employee lead dust/fume exposure and the effectiveness of engineering controls, work practice controls, PPE, etc. Air monitoring must be done during an employee's regular daily duties. Initial air sampling should be taken as soon as possible with the start of an activity (within 24 hours, if possible) and the results received from the lab as soon as possible (within 48 hours, if possible). Respiratory protection must be determined by the airborne lead

level results and the specific work activity. Compare results to the PEL. (Remember to adjust action limit and PEL if working other than 8-hr shifts.)

3. Continue air monitoring until two consecutive tests are obtained below the action level. A historical sampling result may be used as one of the two tests at least 7 days apart if the following conditions are met: acceptable historical air monitoring results are current within the last 12 months and taken where workplace conditions closely resemble the current work (essentially the same types of materials, tools, engineering and work practices, and environmental conditions).

4. In performing air monitoring (personal air sampling), documentation needs to be specific/detailed as to actual work activity tasks, time exposed to lead or non-lead work for the full shift, etc.

5. Any changes in the work activities or conditions that could possibly result in increased exposure require immediate further air monitoring.

6. Air monitoring needs to be done to represent each group of people who have similar exposures (for each task, location, work method, etc.).

7. Environmental Air Monitoring

   a. Perform Total Suspended Particulate (TSP) monitoring when appropriate. Usually on large outside jobs or jobs that vent outside. Follow the environmental guidebook to establish and set up TSP monitoring.

   b. Perform air monitoring prior to any lead abatement work.

   c. Perform air monitoring during lead abatement activity.

   d. Use trained individuals to perform this monitoring.

   e. Document the sampling.

   <u>Note</u>: Proper positioning of these instruments is important. TSP monitoring data will help document that UDOT is not polluting the environment or violating the state and/or federal Clean Air Act requirements.

   The allowable limit is 1.5 ug/m3 as a 90-day average. To adjust this limit to a daily average use the following formula:

   DA=(90÷PD)x1.5ug/m3
   DA=Daily Allowance for 24 hour period
   PD=Number of days lead work will be performed in 90 day period

   THEN

   ADA=DA(24÷H)

ADA=Adjusted Daily Allowance (ug/m3)
DA=Daily Allowance (ug/m3)
H=Hours worked in 24 hours

11.3.4 Personal Protective Equipment

After engineering and work practice controls are in place to minimize the lead contamination hazard, protective clothing must be utilized. At a minimum, this shall include gloves, coveralls or TyVek suits, boots, and hard hats. Clean protective coveralls or TyVek suits must be provided daily, if the airborne lead level is above 200 ug/m3 and weekly if the airborne lead level is below 200ug/m3. However, TyVek suits must be repaired or replaced immediately if ripped or torn. Respiratory protection will be determined/selected in accordance with the Respiratory Selection Guide Chart. PAPR's must be made available to employees should they request them provided known exposure limits for PAPR use are not exceeded.

11.3.5 Hygiene Practices and Controls

Lead contamination occurs through ingestion, inhalation, and absorption. This usually results from ingesting lead particles that come in contact with food, coffee, and cigarettes, or through inhaling paint dust/fumes (without the benefit of a respirator), or coming into skin contact with lead containing materials for excessive periods of time. Good hygiene practices are extremely important no matter which type of lead activity is performed. Adequate time must be allowed for good hygiene practices so as not to interfere with employee break, lunch and shift completion times. To avoid <u>any</u> employee or environmental contamination, the following hygiene practices will be used on all projects with lead activity:

1. Running water (heated if possible), soap (pumpable preferred since it prevents contamination of soap), clean towels, and readily available trash container to ensure employees wash their <u>hands and face</u> prior to eating, drinking, smoking, and leaving the project. Showers are also required, where feasible, when the airborne lead is above 50 ug/m3 (PEL) for an 8 hour (TWA) shift; 40 ug/m3 for a 10 hour (TWA) shift; 33.3 ug/m3 for a 12 hour (TWA) shift.

2. Clean change room/area for removing necessary street clothes and putting on protective clothing. Instructional signs should be posted in change and wash areas to ensure proper steps are taken to prevent exposures. Separate change room/area, including closed disposal container, for employees to remove contaminated clothing. Contamination must not spread to street clothes, employee homes and children.

3. Establish check point(s) at access/egress point(s) to lead work area(s). Assign an individual at this check point(s) to monitor employee hygiene practices exiting work area(s).

4. All dirty coveralls must be placed into a separate container. This container must be marked:

   <u>Caution</u>: "Clothing contaminated with lead. Do not remove dust by blowing or shaking. Dispose of lead contaminated wash water in accordance with local, state and federal regulations."

5. Laundry cleaning service must be notified in writing that clothing is contaminated with lead.

6. Provide clean lunch/break room, separate from change area. Employees must HEPA vacuum themselves off at a checkpoint when leaving the lead work area or remove contaminated clothing and case, wash hands and face before entering a clean area.

7. Keep surfaces clean and work areas free from lead contamination, preferably cleaned with a vacuum equipped with High Efficiency Particulate Air (HEPA) filter. The clean areas (change room/area, lunch room/area, etc.) must have less than 200 mg/ft2 of lead contamination (wipe test). Wipe samples should be done approximately every two weeks, more often if there is reason to believe the areas are not staying clean.

8. Equipment being removed from a lead controlled area needs to be decontaminated by vacuum or water wash. (i.e. body harness/lanyards, grinders, cords, hoses, small tools, etc.)

   Caution: Do not use cleaning methods that introduce lead contaminated dust into the air (like dry sweeping, blow down, etc.).

   Note: There will be no smoking, eating, or drinking in lead contaminated work/change areas, only in properly designated areas. There will also be no smoking, eating, and drinking until contaminated outer clothing is removed and employees have washed up. Furthermore, smoking and eating/drinking materials are not allowed in the lead area.

9. For additional information regarding Lead Abatement trailer use consult the Lead Abatement Trailer Use Procedures (pg. 11-36).

LEAD ABATEMENT TRAILER USE PROCEDURES

The contractor will provide a Lead Abatement Trailer if deemed necessary for lead abatement per the OSHA Standard. The Lead Abatement Trailer will have two separate rooms, one for protective work clothing/lead abatement equipment (dirty), and the other for street clothes (clean), this is done to prevent "cross contamination."

The following features will be located in the protective work clothing/lead abatement equipment room:

- Wash Station: The wash station shall be used by all employees for the purposes of cleaning all exposed body parts prior to leaving the jobsite, and before eating lunch or using any tobacco products. Employees are also encouraged to use the wash station prior to use the restroom.
- Showers: Due to the potential unfeasibility of providing a shower, one may or may not be provided in the lead abatement trailer. If a shower unit is provided employees will be required to shower at the end of the shift prior to leaving the jobsite.
- All Cleaning Agents: All necessary cleaning agents will be provided for both the wash station and shower along with an adequate supply of towels.
- Lead Vacuum: A lead abatement vacuum with a HEPA filter will also be provided to ensure that the accumulation of potential airborne lead in the room is minimal.
- Lead Contaminated Materials Trashcan: For disposal of only lead contaminated materials; TyVek suits, Rags, Vacuumed debris, etc.
- Lead Laundry Container: For controlled storage of lead contaminated clothing that will be laundered.

When accessing the Lead Abatement Trailer the following shall be observed:

Reporting to Work:

1. All employees will enter the lead abatement trailer through the door marked "CLEAN" from which they will switch into their work clothes that they will be wearing under their provided coveralls.
2. Once the employee is wearing their "work clothes" they will pass through the doorway to the protective work clothing/lead abatement equipment room, or dirty room, and continue to get dressed into their provided lead abatement clothing.
3. Employees will then remove their provided respirator from its clean storage area located inside the clothing/lead abatement equipment room and exit the trailer.

Leaving Work and Eating Lunch:

1. Upon completion of the work shift, employees will enter the lead abatement trailer through the door marked "DIRTY."
2. Employees will then "wipe down" their provided respirator and dispose of the used wipes in the Lead Contaminated Trashcan**.

3. Employees will then remove their lead abatement clothes (coveralls, glove, etc.) and place them in the provided storage area in the clothing/lead abatement equipment room. If the provided clothing is soiled, it must be placed in the provided Lead Contaminated Materials Trashcan if it is disposable, or in the Lead Laundry Container**.
4. Next they will wash their hands and face in the provided wash station and dispose of any waste towels into the Lead Contaminated Materials Trashcan**.
5. The employee will now thoroughly clean they're provided respirator and place it in the clean storage area located inside the clothing/lead abatement equipment room.
6. Only at this time will employees then be allowed to pass through the doorway to the street clothes or "CLEAN" room. At which time they will remove their work clothes and place them in provided storage area and change into their street clothes.
7. At this time the Employee can exit the lead abatement trailer through the clean doorway.

NOTE: ALL Doorways are equipped with a passage lock for privacy. Employees are encouraged to use the locks for this purpose and always respect the privacy of others.

**An explanation of lead hazards must also be provided to those responsible for cleaning or laundering the protective clothing. In addition, disposal or laundry containers have to be labeled:

CAUTION: CLOTHING CONTAMINATED WITH LEAD. DO NOT REMOVE DUST BY BLOWING OR SHAKING. DISPOSE OF LEAD CONTAMINATED WASH WATER IN ACCORDANCE WITH APPLICABLE LOCAL, STATE, OR FEDERAL REGULATIONS.

It is the responsibility of the Project Management to establish a lunch and/or break area outside of the lead abatement operations. At a minimum the lunch and/or break area should be at least 50' upwind of the lead abatement operation.

Furthermore, to ensure that any and all employees on a project are aware of UDOT's lead abatement operations, when they arrive at the jobsite, UDOT requires the posting of UDOT's Lead Work Area Signs prior to the start of the lead abatement process. These postings and/or signs clearly state:

WARNING – LEAD WORK AREA – NO SMOKING OR EATING

APPENDIX A

INSTRUCTIONS FOR ASSESSING POINT DEDUCTIONS ON WORK ZONE INSPECTIONS

The following definitions are to be used as a basis for assessing point deductions for violations determined by Work Zone Inspections. Multiple of two times the point deductions will be assessed for repeat and/or subsequent similar infractions on the same project.

- **Minor** - An act or omission of failing to comply with applicable standards related to job safety and health that *does not* constitute an immediate danger, exposure or threaten bodily harm/injury or death to workers or the public.

- **Serious** - An act or omission of failing to comply with applicable standards, specifications, special provisions, industry standards, etc. related to job safety and health and/or the loss of project funds. Also, any act or omission that constitutes a *possible danger* and exposure to bodily harm/injury and the substantial possibility of death to workers or the public.

- **Severe** - An act or omission with intentional disregard or indifference to complying with applicable standards, specifications, special provisions, industry standards, etc. related to job safety and health and/or the loss of project funds. Any condition which results from the aforementioned performance that constitutes *imminent danger* and is immediately life threatening to workers or the public.

Note: Failure to abate and or repeat infractions that are **SERIOUS** or **SEVERE** constitutes willful neglect and will cause an immediate stoppage of the work until the noted infractions are corrected or abated.

Score ☐ Courtesy Inspection ☐ **WORK ZONE INSPECTION**

(Infractions Weight: -1 minor -2 serious -3 severe X2 for major or repeat

Date: ☐ Time: ☐ Speed Limit: ☐ Case # ☐

Engineer: ☐ Contractor: ☐

Location: ☐ Project#/Work ☐

☐	A. Flagger Certified?	☐	G. Travel Path Defined?	☐	N. Public protected?
☐	B. Dressed Properly?	☐	H. Lane change/closure ok?	☐	O. Warning of Hazards?
☐	C. Proper Control of Traffic?	☐	I. Obsolete marks removed?	☐	P. Flags on signs
☐	D. Proper Work Signs / Paddle?	☐	J. Devices clean/undamaged?	☐	Q. Device removed/not in use?
☐	E. Flaggers Visible?	☐	K. Proper devices in taper?	☐	R. Traffic devices comply?
☐	F. Nighttime Flagging/Lights?	☐	L. Special Provisions/Plans?	☐	S. Attractive Nuisance?
		☐	M. UDOT Standard Spec's?	☐	T. Other?

COMMENTS

☐	1. Aerial lift tie off	☐	12. Fire Extinguisher	☐	23. ROPS
☐	2. Air Hoses	☐	13. First Aid Equipment	☐	24. Qualified Operators
☐	3. Back up alarms	☐	14. Flammable Storage	☐	25. Safety Bulletin Board
☐	4. Chains	☐	15. Fork Lifts	☐	26. Sanitation Facilities
☐	5. Confined space entry	☐	16. Hand Rails on Platforms	☐	27. Scaffolds + Inspection
☐	6. Cranes / Platforms	☐	17. Housekeeping	☐	28. Seat Belt Use
☐	7. Drinking Water	☐	18. Impalement Protection	☐	29. Tag Lines on Loads
☐	8. Electrical Cords / GFCI	☐	19. Ladder Secure	☐	30. Tool Box Meetings
☐	9. Environmental	☐	20. MSDS on Site	☐	31. Welding Tank Storage
☐	10. Excavation / Trench	☐	21. PPE	☐	32. Wheel Chocks
☐	11. Fall Protection	☐	22. Power Tools	☐	33. OTHER

COMMENTS

NAME	TITLE	COMPANY	PHONE

APPENDIX B
(page 9-141)
SPILL NOTIFICATION PROCEDURE

Initial determination as to the severity of the spill is the responsibility of the Contractor.

EMERGENCY SPILL: The spill presents a potential for harm to personnel or the environment, the Contractor is not able to immediately control and clean-up the spill and/or the spill exceeds the reportable quantity the Contractor will:

1. Clear and secure the immediate area.

2. Notify the UDOT Region Safety Risk Manager at: _____

3. Notify the RE at: _____

4. An incident report will be submitted within 24 hours to the RE.

NON-EMERGENCY SPILL:

1. A non-emergency spill is a spill that does not present potential harm to personnel and/or the environment, the Contractor has the ability to immediately control and clean-up the spill, and the spill is less than 25 gallons.

2. All spills must be cleaned up and disposed of properly. A spill report will be submitted to the ENGINEER explaining the spill quantity and method of disposal including Hazardous Waste Disposal Manifest if applicable.

APPENDIX C
(page 7-100)
CRANE – CRITICAL LIFT CHECKLIST

Date:_Project Name:_

To:_C.I.P. No.:_W.I.P. No.:_

Contractor:

Attn:_Contract No:_

From: _Location:_

Subject:_Description of lift:_

CRITICAL LIFT CHECKLIST

Definition: A critical lift is any lift that exceeds 90% of the crane's rated capacity, any lift involving more than one crane or any lift involving unusual or severe hazards.

1. Name of supervisor in charge of lift:_
2. Name of crane operator:_
3. Name of signal person(s)_

The person in charge of the lift must check the following items.

	OK	N/A
4. Pick Conditions		
A. Is the crane-pad level, firm and stable?		
B. Has the longest picking radius been measured?		
C. Have special hazards been identified?		
1. Power lines		
2. Obstruction in lift path		
3. Location of underground utilities or structures		
4. Weather conditions		
D. Has lift sequence been established and reviewed?		
E. Are unnecessary personnel clear of area?		
5. **Load Conditions**		

A. Load weight _lbs.

B. Weight of rigging _lbs.

C. Weight of the load block and line _lbs.

D. Has the Center of Gravity of the load been established & marked?_Y_N

E. Is rigging adequate and in good condition? _Y_N

	OK	N/A
6. **Communication**		
A. Have hand signals been reviewed?		
B. Has location of spotters been established?		
C. If radios are used:		
1. Have they been tested from location of use?		
2. Is frequency clear of other radio traffic?		

7. Condition of Crane (checked by Operator)	OK	N/A
A. Is pad blocking adequate and substantial?		
B. Is the crane level?		
C. Are ropes and pendants in good condition?		
D. Are adequate parts of line being used?		
E. Is line reeved properly?		
F. Are controls in good working condition to insure smooth operation.		

G. What is the boom length? _

H. What is the maximum boom angle? _

I. What is the maximum load radius? _

J. Is the load within chart limits for the above conditions? Y N

Has a pre-lift meeting been conducted with all persons involved to review this information? Yes No

Signed: __
Supervisor Project Manager

APPENDIX D
(page 7-58)
CONFINED SPACE ENTRY CHECKLIST

DATE: _____ CONTRACTOR: _____

CONTRACT #: _____

JOB SITE LOCATION: _____

DESCRIPTION OF SPACE: _____

TIME ISSUED: _____ TIME EXPIRES: _____

EMPLOYEES ENTERING SPACE: _____
_____
_____

JOB SPECIFIC HAZARDS: _____
_____
_____

INITIAL ATMOSPHERIC READING: TIME: _____

OXYGEN: _____% LEL: _____% H2S: _____ppm CO: _____ppm

OTHER: _____ppm OTHER: ____ppm OTHER: ____ppm

CAN HAZARDS BE ELIMINATED? _____YES _____NO

RE-CLASSIFY AS NON-PERMIT ENTRY _____YES _____NO

QUALIFIED PERSON / SUPERVISOR: _____

CHECKLIST

LOCK OUT/TAG OUT _____ BLANK _____ PURGE _____

VENTILATION _____ STAND-BY _____

HOT WORK PERMIT _____ FIRE EXTINGUISHERS _____

FULL BODY HARNESS _____ LIFELINES _____ PPE _____

RESCUE EQUIPMENT _____ RESPIRATOR TYPE _____

NON-SPARKING TOOLS _____ EXPLOSION PROOF LIGHTING _____

ESCAPE EQUIPMENT _____ ESCAPE AIR _____

CPR TRAINED ATTENDANT _____ SECURE AREA _____

COMMUNICATION _____

APPENDIX E
(page 7-30)
JOB SAFETY ANALYSIS (JSA) WORKSHEET

Date:_Project Name:_

To:_C.I.P. No.:___W.I.P. No.:_

Contractor:

Attn:_Contract No:_

From: _

Subject: _

JOB SAFETY ANALYSIS WORKSHEET

Title of Job Operation:_Date:_ No. _

Position/ Title of Person(s) Doing Work:_ Analysis made by: _

_Analysis Reviewed by: _

Anticipated Date and Time Activity will Begin: _

Sequence of Basic Job Steps	Potential Accidents or Hazards	Recommended Safe Job Procedures

1. Struck By (SB)
2. Struck Against (SA)
3. Contacted By (CB)
4. Contact With (CW)
5. Caught On (CO)
6. Caught In (CI)
7. Caught Between (CB)
8. Fall – Same Level (FS)
9. Fall to Below (FB)
10. Overextension (OE)
11. Exposure (E)

(CONTINUE ON ADDITIONAL PAGES AS NEEDED)

Sequence of Basic Job Steps	Potential Accidents or Hazards	Recommended Safe Job Procedures

1. Struck By (SB)
2. Struck Against (SA)
3. Contacted By (CB)
4. Contact With (CW)
5. Caught On (CO)
6. Caught In (CI)
7. Caught Between (CB)
8. Fall – Same Level (FS)
9. Fall to Below (FB)
10. Overextension (OE)
11. Exposure (E)

Date:_Project Name:_
To:_C.I.P. No.:___
_____W.I.P. No.:_
Contractor:
Attn:_Contract No:_
From: _
Subject: _

Employee Review Form		Hazardous Work Permit/Job Safety Analysis Sign-Off	
I have read the attached Hazardous Work Permit and/or JSA and understand the hazards associated with this job.			
Date	Time	Employer	Name

1. Struck By (SB)
2. Struck Against (SA)
3. Contacted By (CB)
4. Contact With (CW)
5. Caught On (CO)
6. Caught In (CI)
7. Caught Between (CB)
8. Fall – Same Level (FS)
9. Fall to Below (FB)
10. Overextension (OE)
11. Exposure (E)

APPENDIX F
(page 7-29)
SAFETY BELTS/HARNESS & LANYARDS INSPECTION RECORD

HARNESS INSPECTION CHECKLIST

EMPLOYEE NAME EQUIPMENT # SERIAL #

_____.

ITEMS TO INSPECT

Indicate OK or use an R to indicate REPLACE

BELT WEBBING or LEATHER__ STITCHING_____ RIVETS & EYELETS___

D-RINGS____ BUCKLES_____ BODY PADS.

SAFETY LATCHES ON HOOKS_ FALL ARREST LANYARD.

POSITIONING LANYARD.CERTIFICATION or DATA TAG.

Inspection of equipment must be performed daily before use. Report and replace defective equipment immediately. **Do not use defective or personally owned equipment unless inspected by Competent Person.**

All components have been inspected and are in safe working condition.YES.NO

Additional Comments:

____

__
SIGNATURE DATE

APPENDIX G
(page 7-119)
HOT WORK CHECKLIST

PROCEDURE - A hot checklist is required when ignition sources may be introduced. The contractors Site Safety Representative (SSR) is responsible for all site hot work.

DEFINITION - Hot work is any process which because of its design or function can cause ignition of a gaseous or vaporous atmosphere due to direct or indirect contact.

HOT WORK PERMIT

The SSR has surveyed the site and found the following Hot Work condition(s) do or may exist at _____and will require permitting.
(location)

CONDITION	YES	NO	CONDITION	YES	NO
Welding			Electrical equipment, fixed		
Cutting			Electrical equipment, portable		
Use of power tools			Electrical equipment, hand-held		
Space heaters			Others		

PRE-WORK CHECKLIST All items must be completed.	YES	NO	N/A
Has the work area inspected by SSR prior to Hot Work beginning?			
Has a fire watch been established? Name?			
Is the fire extinguisher appropriate for the media?/Readily accessible?			
Is the work area clear of all trash and combustible debris?			
Is the equipment properly grounded?			
Has the area in which hot work is to be performed been monitored for combustible atmosphere?			
Will combustible gas indicator(s) (CGI) be used constantly during Hot Work?			
If no, why?			
List additional personal protective equipment (PPE) worn:			
Is welding or cutting on closed systems prohibited?			
Are their closed system cutting procedures established?			

DATE____/____/____ TIME____:____ CHECKLIST EXPIRATION TIME____:____

CERTIFICATION OF SSR THAT HOT WORK MAY COMMENCE_____
(SSR Signature)

A new hot work checklist will be required at the beginning of each shift or after more than one (1) hour intervals of no hot work procedure.

HOT WORK TEAM SIGN-OFF		
I/we have read and understand the terms of the above Hot Work Checklist		
NAME (PLEASE PRINT CLEARLY)	SIGNATURE	DATE/TIME

CERTIFICATION OF SSR THAT THE HOT WORK AREA HAS BEEN SHUT DOWN AND THAT, UPON INSPECTION OF AT LEAST 30 MINUTES AFTER HOT WORK SHUT DOWN, THAT NO IGNITION POTENTIAL EXISTS:

SITE SAFETY REPRESENTATIVE SIGNATURE_____ TIME:_____

APPENDIX H
(page 7-102)
MOBILE CRANE SAFETY INSPECTION CHECKLIST

CRANE INSPECTION CHECKLIST					
CRANE NO:	MILEAGE:		HOURS:	DATE:	
A. GENERAL REQUIREMENTS	OK	*REP	C. MAIN MACHINE	OK	*REP
1. Capacity charts in cab			1. Controls		
2. Special instructions posted			2. Clutches		
3. Barricades (tailswing)			3. Brakes		
4. Exhaust pipes guarded			4. Brake locks		
5. 5 BC fire ext. in cab			5. Main drum		
6. First-aid kit in cab			6. Boom hoist		
7. Safety glass in cab			7. Boom hoist panel		
8. Guardrails/hand holds			8. Boom hoist kickout		
9. Platform and steps/non-skid			9. Oil leaks		
10. Proximity signs, 10 ft. min.			10. Hook rollers and turret		
11.			11.		
B. ATTACHMENTS			D. CARRIER		
1. *Hooks and blocks (safety latch on hook)			1. Steering		
2. Sockets and rope clamps			2. Brakes (all system)		
3. Boom and lacing			3. Lights, horns, wipers		
4. Boom stops			4. Transmission		
5. Spreaders and gantry			5. Differential		
6. Jib and stops			6. Clutch		
7. Outriggers and pads			7. Engine		
8. Counterweights			8. Tires and wheels		
9. Wire Rope			9. Gauges		
10. Slings / Chockers			10.		

Inspected at: (Location) _____ By: _____

* Repair or Replace – Respond on the reverse side by specific item letter and number. Require separate, recorded annual inspection for deformation and/or cracks.

APPENDIX I
(page 2-8)
DRUG-FREE WORK PLACE ACT

Every person or organization awarded a contract or grant by the UDOT for the provision of services shall certify to the UDOT that it will provide a drug-free work place by doing all of the following:

a. Publishing a statement notifying employees that the unlawful manufacture, distribution, dispensation, possession or use of a controlled substance is prohibited in the work place, and specifying the actions that will be taken against employees for violations of the prohibition.

b. Establishing a drug-free awareness program to inform employees about all of the following:

   1) The dangers of drug abuse in the work place.

   2) The organization's policy of maintaining a drug-free work place.

   3) Any available drug counseling, rehabilitation, and employee assistance programs.

   4) The penalties that may be imposed upon employees for drug abuse violations.

c. For those projects which are partly funded by a Federal grant, these additional requirements will apply:

   1) Each employee to be engaged in the performance of the grant be given a copy of the statement required by paragraph (a) above.

   2) Notifying the employee in the statement required by paragraph (a) that, as a condition of employment under the grant, the employee will

   3) aide by the terms of the statement; and

   4) Notify the employer in writing of his or her conviction for a violation of a criminal drug statute occurring in the work place no later than five calendar days after such conviction;

   5) The employer will notifying the UDOT in writing, within ten calendar days after receiving notice under paragraph 4 from an employee or otherwise receiving actual notice of such conviction. Employers of convicted employees must provide notice, including position title to the UDOT on those projects under Federal grant.

   6) Take one of the following actions, within 30 calendar days of receiving notice under paragraph (d) (2), with respect to any employee who is so convicted.

   7) Taking appropriate personnel action against such an employee, up to and including termination, consistent with the requirements of the Rehabilitation Act of 1973, as amended; or

   8) Requiring such employee to participate satisfactorily in a drug abuse assistance or rehabilitation program approved for such purposes by a Federal, State, or local health, law

enforcement, or other appropriate agency;

9) Making good faith effort to continue to maintain a drug-free work place through implementation of paragraphs (a), (b), and 8 1 through 10.

10) The general contractor will ensure that all subcontractors and lower tiered contractor have a written Drug-Free Work Place Policy that will comply with the requirements of this section.

11) The grantee may insert in the space provided below the site(s) for the performance of work done in connection with the specific grant: Place of performance (Street address, city, county, state, zip code).

12) Applicable drug and alcohol testing standards according to Utah Code Annotated, Section 34-38-1 apply for State of Utah employees.

APPENDIX J
(page 11-159)
LEAD WORK INSPECTION CHECKLIST

1. ___ Activity/area description _____
2. ___ Housekeeping _____
3. ___ Areas vacuumed/cleaned _____
4. ___ Work areas controlled and signs posted _____
5. ___ Respirators stored properly _____
6. ___ Mechanical ventilation operation/flow _____
7. ___ Engineering controls adequate _____
8. ___ Administrative controls adequate _____
9. ___ Activity plan current and in the workplace _____
10. ___ Air monitoring current _____
11. ___ Wipe sampling current _____
12. ___ PPE (coveralls, boots, hats, gloves, etc.) adequate _____
13. ___ Hygiene practices adequate _____
14. ___ Wash/change facilities clean/organized _____
15. ___ Breathing air systems operation check _____
16. ___ Waste storage proper _____
17. ___ Employee lead training completed _____
18. ___ Lunch/break areas clean _____
19. ___ Smoking, eating, drinking, work areas _____
20. ___ Respirators appropriate for activity _____
21. ___ Blood tests current _____
22. ___ Appropriate power tools being used _____
23. ___ Fit testing/medical exams current _____
24. ___ Lead waste contained to work and hazardous waste storage areas and labeled _____
25. ___ Evaluate public/private inhabitants in surrounding work areas that could potentially be affected by lead fumes/dust release. _____

Competent Person: _____Date: _____

EQUIPMENT SAFETY SERVICES

TO REDUCE GROUND PRESSURE

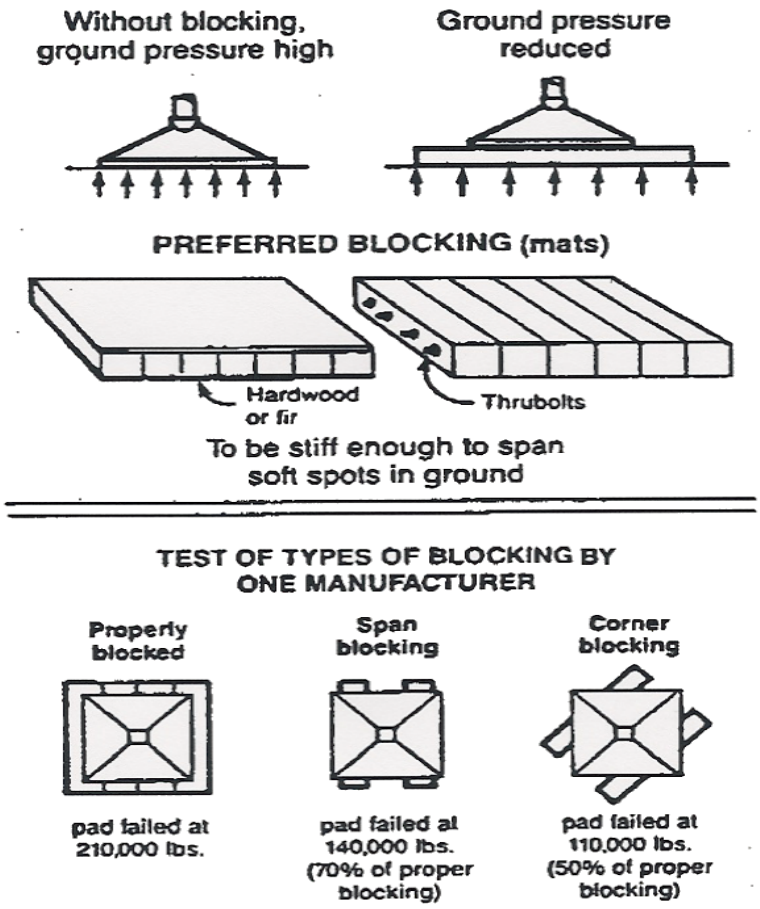

udot.utah.gov/go/construction